This is a digital copy of a book that was preserved for generations on library shelves before it was carefully scanned by Google as part of a project to make the world's books discoverable online.

It has survived long enough for the copyright to expire and the book to enter the public domain. A public domain book is one that was never subject to copyright or whose legal copyright term has expired. Whether a book is in the public domain may vary country to country. Public domain books are our gateways to the past, representing a wealth of history, culture and knowledge that's often difficult to discover.

Marks, notations and other marginalia present in the original volume will appear in this file - a reminder of this book's long journey from the publisher to a library and finally to you.

Usage guidelines

Google is proud to partner with libraries to digitize public domain materials and make them widely accessible. Public domain books belong to the public and we are merely their custodians. Nevertheless, this work is expensive, so in order to keep providing this resource, we have taken steps to prevent abuse by commercial parties, including placing technical restrictions on automated querying.

We also ask that you:

+ *Make non-commercial use of the files* We designed Google Book Search for use by individuals, and we request that you use these files for personal, non-commercial purposes.
+ *Refrain from automated querying* Do not send automated queries of any sort to Google's system: If you are conducting research on machine translation, optical character recognition or other areas where access to a large amount of text is helpful, please contact us. We encourage the use of public domain materials for these purposes and may be able to help.
+ *Maintain attribution* The Google "watermark" you see on each file is essential for informing people about this project and helping them find additional materials through Google Book Search. Please do not remove it.
+ *Keep it legal* Whatever your use, remember that you are responsible for ensuring that what you are doing is legal. Do not assume that just because we believe a book is in the public domain for users in the United States, that the work is also in the public domain for users in other countries. Whether a book is still in copyright varies from country to country, and we can't offer guidance on whether any specific use of any specific book is allowed. Please do not assume that a book's appearance in Google Book Search means it can be used in any manner anywhere in the world. Copyright infringement liability can be quite severe.

About Google Book Search

Google's mission is to organize the world's information and to make it universally accessible and useful. Google Book Search helps readers discover the world's books while helping authors and publishers reach new audiences. You can search through the full text of this book on the web at `http://books.google.com/`

193

1799

INDEX

TO THE

EXECUTIVE DOCUMENTS

OF THE

HOUSE OF REPRESENTATIVES

FOR THE

SECOND SESSION OF THE FORTY-FIFTH CONGRESS,

1877-'78.

IN 22 VOLUMES.

VOLUME VII.—Reports of the Secretary of the Navy and Postmaster General (No. 1, Pts. 3 and 4).

WASHINGTON:
GOVERNMENT PRINTING OFFICE.
1878.

LIBRARY
OF THE
LELAND STANFORD JUNIOR
UNIVERSITY.

A 2625

INDEX TO HOUSE EXECUTIVE DOCUMENTS.

CONTENTS OF THE VOLUMES.

VOL. 1..FOREIGN RELATIONS: No. 1, pt. 1.
VOL. 2..WAR: No. 1, pt. 2, v. 1.
VOL. 3.. ENGINEERS: No. 1, pt. 2, v. 2, pt. 1.
VOL. 4.. ENGINEERS: No. 1. pt. 2, v. 2, pt. 2.
VOL. 5.. ORDNANCE: No. 1, pt. 2, v. 3.
VOL. 6.. SIGNAL OFFICE: No. 1, pt. 2, v. 4.
VOL. 7..NAVY AND POSTMASTER: No. 1, parts 3 and 4.
VOL. 8..INTERIOR: No. 1, pt. 5, v. 1.
VOL. 9.. EDUCATION: No. 1, pt. 5, v. 2.
VOL. 10..No. 1, parts 6, 7, 8, and Nos. 7 to 33, inclusive.
VOL. 11..REPORT OF THE SECRETARY OF TREASURY: No. 2.
VOL. 12..Nos. 3 and 4.
VOL. 13..Nos. 5, 6, 61, and 73.
VOL. 14..Nos. 34 to 72, except Nos. 34, 39, 51, and 61.
VOL. 15..Nos. 35 and 39.
VOL. 16..No. 51.
VOL. 17..Nos. 74 to 101, inclusive, except Nos. 89 and 90.
VOL. 18..No. 89, FISHERY AWARDS, v. 1.
VOL. 19..No. 89, FISHERY AWARDS, v. 2.
VOL. 20..No. 89, FISHERY AWARDS, v. 3.
VOL. 21..No. 90, COMMERCE AND NAVIGATION.
VOL. 22..No. 102, COMMERCIAL RELATIONS.

INDEX TO THE DOCUMENTS.

Subject.	Volume.	No.	Part.
A.			
Adjutant-General, report of the freedmen's branch of office of..	2	1	2
Agriculture, message of the President, transmitting a special report on forestry by the Commissioner of	10	24	
Appointment of cadets by the President, letter from the Attorney-General, in response to a resolution of the House in regard to	14	70	
Appropriations, letter from the Secretary of the Treasury, transmitting estimates of	13	5	
Appropriations, deficiency in, for the Army, letter from the Secretary of War, transmitting estimates for	10	18	
deficiency in, for 1878 and prior years, letter from Secretary of Treasury, transmitting estimates for	14	45	
estimates of, for payment of claims due prior to July 1, 1875, letter from the Secretary of the Treasury, transmitting	10	27	
Arid regions of the United States, report of Maj. J. W. Powell on	13	73	
Arizona, military roads in, letter from the Secretary of War in relation thereto	10	21	
Arkansas River, report of Chief of Engineers upon the necessity of the improvement of	10	22	
Arms, George R., letter from the Secretary of War, transmitting report of Adjutant-General in the case of	10	12	
Army appropriations, for certain deficiencies in	10	18	
Army, report of the General of the (vol. 1)	2	1	2
supplemental report of the (vol. 1)	2	1	2
report of the Judge-Advocate-General of the (vol. 1)	2	1	2
report of the Quartermaster-General of the (vol. 1)	2	1	2
report of the Commissary-General of the Subsistence of the (vol. 1)	2	1	2
report of the Surgeon-General of the (vol. 1)	2	1	2
report of the Paymaster-General of the (vol. 1)	2	1	2

Subject.	Volume.	No.	Part.
Army, report of the Chief of Engineers of the (being vol. 2, parts 1 and 2)	3 and 4	1	2
report of the Chief of Ordnance of the (being vol. 3)	5	1	2
report of the Chief Signal Officer of the (being vol. 4)	6	1	2
letter from the Secretary of War, transmitting estimates of appropriations for certain deficiencies in appropriations for the	10	18	
letter from the Secretary of War, showing the distribution of United States troops	14	55	
Attorney-General, annual report of the	10	7	
letter from the, in response to a resolution of the House in reference to the appointment of cadets to the Naval and Military Academies, by the President	14	70	
letter from the, in response to a resolution of the House in relation to suits against the Kansas Pacific Railroad	17	76	
letter from the, in response to a resolution of the House, transmitting a list of pardons by the President between March 4, 1877, and May 20, 1878	17	100	
Award of the Fishery Commission, documents and proceedings of the Halifax (3 vols.)	18, 19, 20	89	
B.			
Barracks, letter from the Secretary of War, recommending appropriations for new, at Fort Monroe, Va	14	43	
Bath, Me., letter from the Secretary of War, transmitting report of engineer upon the improvement of the "gut" opposite	14	56	
Blackwater River, in Virginia, letter from the Secretary of War, transmitting report of engineer upon the improvement of	14	60	
Board of Health of District of Columbia, annual report of	10	1	7
Board of Visitors of Military Academy, report of (vol. 1)	2	1	2
Board of Visitors of the Government Hospital for the Insane, report of (vol. 1)	8	1	5
Board of Commissioners of the Soldiers' Home, report of (vol. 1)	2	1	2
Bonds, letter from the Secretary of the Treasury, in response to a resolution of the House, in reference to the sale of United States, for outstanding legal-tender notes	14	63	
Bridge, letter from the Secretary of War, transmitting report of engineer upon bridging the Saginaw River at East Saginaw, Mich	14	57	1, 2
Bureau of Statistics, annual report of Chief of, on the commerce and navigation of the United States	21	90	
C.			
Cadets, letter from the Attorney-General, in response to a resolution of the House, in reference to the appointment of, to the Naval and Military Academies, by the President	14	70	
Canal, Dismal Swamp, letter from the Secretary of the Treasury in reference to the interest of the government in	10	19	
ship, Sturgeon Bay and Lake Michigan, letter from the Secretary of War, transmitting the report of engineer on the improvements of	14	44	
Certificate of citizenship, to seamen during year ending December 31, 1877, letter from the Secretary of State, transmitting an abstract of returns made by collectors of customs of the number of seamen who had received	14	68	
Chickahominy River, report of the engineer upon the improvement of	14	60	
Chief of Bureau of Statistics, annual report of, on the commerce and navigation of the United States	21	90	
Chief of Ordnance, annual report of the (vol. 3)	5	1	2
Cincinnati, harbor of, report of the engineer concerning the best method of protecting, from ice	14	41	

Subject.	Volume.	No.	Part.
Claims, letter from the Secretary of the Treasury, transmitting list of, allowed under act of July 4, 1864	10	31	
letter from the Secretary of the Treasury, transmitting an estimate of appropriations for payment of, originating prior to July 1, 1875, under section 3687 and 3689 Revised Statutes	10	27	
Clerks in the War Department, letter from the Secretary of War, transmitting a list of	10	16	
Coast Survey, annual report of Superintendent	11	2	
Columbia Hospital for Women and Lying-in Asylum, annual report of (vol. 1)	8	1	5
Columbia Institution for the Deaf and Dumb, annual report of (vol. 1)	8	1	5
Colorado, letter from the Secretary of War, in response to a resolution of the House concerning the protection of residents of, against the Indians	17	91	
Colorado and New Mexico, letter from the Secretary of War, transmitting report on lines of communication between	14	66	
Commerce and navigation of United States, report of Chief of Bureau of Statistics	21	90	
Commercial relations of the United States with foreign countries, report upon the, for the year 1877	22	102	
Commission, Hot Springs, report (vol. 1)	8	1	5
letter from the Secretary of State, transmitting correspondence, &c., in connection with the, appointed by the President to visit Louisiana in April, 1877	17	97	
award of the Halifax Fishery (3 vols.)	18	89	
Venezuelan mixed claim, message from the President, transmitting correspondence between Venezuela and the United States in regard thereto	19	30	
Commissioner of Education, annual report of the	9	1	5
Commissioner of Customs, report of	11	2	
Commissioner of Pensions, report of (vol. 1)	8	1	5
Commissioner of Agriculture, message of the President, transmitting report on forestry by	10	24	
Commissioner of Internal Revenue, annual report of, with table showing receipts from each specific source, &c	12	4	
report of, with additional statements and tables	11	2	
Commissioner of General Land Office, report of (vol. 1)	8	1	5
Commissioner of Patents, annual report of	13	61	
Commissioner of Indian Affairs, statements of disbursements for the Indian Department for 1877	13	6	
report of (vol. 1)	8	1	5
papers accompanying the above report (vol. 1)	8	1	5
Commissioners to treat with Sitting Bull, report of (vol. 1)	8	1	5
Commissioners of the District of Columbia, annual report of	10	1	6
Commissary-General of Subsistence, report of	2	1	2
Commutation allowed officers in certain cities, letter from the Secretary of War, transmitting a list of officers who received fuel, forage, and quarters in certain cities	14	48	
Commutation of quarters, fuel, and forage, letter from the Secretary of War, recommending an amendment of the statutes in relation thereto	10	17	
Connecticut River, report of survey of, transmitted by Secretary of War	17	101	
Comparative exhibit of duties upon foreign imports, &c., letter from the Secretary of the Treasury, in answer to a resolution of the House, relative to duties upon foreign imports, &c., showing proposed rate of duty, present rates, and quantity and value of imported commodities which entered into consumption in the United States during the year ending June 30, 1871	17	78	

Subject.	Volume.	No.	Part.
Compensation of inspectors of customs, letter from the Secretary of the Treasury, transmitting a letter from the Commissioner of Customs proposing an alteration of certain sections of the Revised Statutes fixing the	14	36	
Comptroller of the Currency, annual report of	12	3	
Comptroller of the Treasury, report of aggregate resources and liabilities of national banks from October, 1863, to October, 1877	11	2	
Contingent expenses, letter from the Secretary of State, transmitting estimate of expenditure of contingent fund for the department	10	9	
letter from the Secretary of the Interior concerning deficiency in the, of the General Land Office	10	13	
Contingent fund of the Interior Department, letter from the Secretary, transmitting detailed account of the expenditure of the contingent fund of Interior Department	14	42	
Currency, annual report of Comptroller of	11	3	
Customs, report of Commissioner of	11	2	
Customs officers, letter from the Secretary of the Treasury, transmitting a statement of emoluments and fees of	14	65	
letter from the Secretary of the Treasury, transmitting a copy of letter from the Commissioner of Customs proposing an alteration in the Revised Statutes fixing the compensation of inspectors of customs	14	36	
Customs revenue, letter from the Secretary of the Treasury, transmitting draught of a bill to prevent frauds in	17	86	
Customs service, letter from the Secretary of the Treasury, transmitting papers relative to the investigation of the	10	25	
D.			
Deaf and Dumb, annual report of the officers of the Columbia Institution for the (vol. 1)	8	1	5
Decrease of receipts from internal revenue, letter from the Secretary of the Treasury, transmitting a communication from the Commissioner of Internal Revenue, showing a decrease in the receipts of	14	50	
Deficiencies in certain appropriations for the Army	.....	18	
Deficiencies in appropriations for 1878 and prior years, letter from the Secretary of the Treasury, transmitting estimates of	14	45	
Deficiency for the contingent expenses of the General Land-Office, letter from the Secretary of the Interior concerning	10	13	
Director of the Mint, report of	11	2	
Directors of the Union Pacific Railroad, report of (vol. 1)	8	1	5
Disbursing clerk, letter from the Secretary of the Interior, recommending that the disbursing clerk of the department be relieved from responsibility of the payment of certain forged vouchers	14	54	
Disbursements made from appropriations for the Indian Department	13	6	
Dismal Swamp Canal, letter from the Secretary of the Treasury in reference to the interest of the government in	10	19	
Distribution of United States troops, letter from the Secretary of War, showing the	14	55	
District of Columbia, annual report of Commissioners of	10	1	6
annual report of the Board of Health	10	1	7
Dredge-boat McAllister, letter from the Secretary of War in relation to the disappearance of	14	67	
Duties upon foreign imports, comparative exhibit of, letter from the Secretary of the Treasury in answer to a resolution of the House relative to	17	78	

Subject.	Volume.	No.	Part.
E.			
Education, annual report of the Commissioner of	9	1	5
El Paso troubles in Texas, letter from the Secretary of War in response to a resolution of the House, transmitting reports of the commission appointed to investigate the	17	93	
El Paso troubles, letter from the Secretary of War, transmitting report from Colonel Hatch on	17	84	
Emanuel, Victor I, King of Italy, letter from the Secretary of State, transmitting a letter from the Italian minister, relative to the respect shown the memory of	14	69	
Employés of the War Department, letter from the Secretary of War, in response to a resolution of the House, transmitting a list of, who have rendered service in the Army and Navy of the United States	17	99	
Employés of the Navy Department, letter from the Secretary of the Navy, transmitting a list of civil employés for the year 1877	10	29	
Employés in the Interior Department, letter from the Secretary, transmitting a list of all employés who were honorably discharged from the military or naval service for disability arising from sickness or wounds incurred in the line of duty	17	94	
Engineers, report of the Chief of (vol. 2, parts 1 and 2)	3, 4	1	2
Estimates of appropriations. (See Appropriations.)			
Expenditures and receipts of the United States, an account of, for the year ending June 30, 1873	15	35	
Expenditures and receipts of the United States, an account of, for the year ening June 30, 1874	15	39	
Expenditures in the State Department, letter from the Secretary of State, transmitting statement of contingent fund for the department	10	9	
Explosions, steam-boiler, message from the President, transmitting the report of the commission appointed under act of March 3, 1873, relative to the causes of	14	40	
F.			
Fees of customs officers, letter from Secretary of Treasury, transmitting a statement of	14	65	
Fire, security of public buildings against, message from the President, transmitting report of the commission appointed to examine into the security of, in the city of Washington	10	10	
Fishery Commission, award of the Halifax, of 1877, with documents and proceedings (3 volumes)	18, 19, 20	89	
Flushing Bay, New York, letter from the Secretary of War, transmitting report relative to improvement of	17	74	
Forage, letter from the Secretary of War, recommending an amendment of the statutes in relation to commutation of	10	17	
Foreign relations, papers relating to	1	1	1
Appendix, containing correspondence relative to the improvement of commercial intercourse between the United States and foreign countries, preceded by a list of papers and followed by an index of persons and subjects	1	1	1
Foreign countries, report upon the commercial relations of the United States with, for the year 1877	22	102	
Fishery Commission, documents and proceedings of the Halifax (3 vols.)	18, 19, 20	89	
Forestry, message from the President of the United States, transmitting a special report upon the subject of, by the Commissioner of Agriculture	10	24	
Fort Monroe, Va., letter from the Secretary of War, recommending appropriations for six new buildings at	14	43	
Frauds in customs revenue, letter from the Secretary of the Treasury, transmitting draught of a bill to prevent	17	86	
Freedmen's Hospital and Asylum, report upon the (vol. 1)	8	1	5

Subject.	Volume.	No.	Part.
Fuel, letter from the Secretary of War, recommending an amendment of the statutes in relation to commutation of....	10	17	
G.			
Geological and geographical surveys, a letter from the Secretary of the Interior, transmitting a report of Professor Powell in regard to, in response to a resolution of the House....	17	80	
General of the Army, report of the (vol. 1).....	2	1	2
General Land Office, letter from the Secretary of the Interior concerning deficiency for contingent expenses of the.....	10	13	
H.			
Halifax Commission, 1877, award of the Fishery Commission, documents and proceedings of, under the treaty of Washington of May 8, 1871, in three volumes.....	18, 19, 20	89	
Harbor at Cincinnati, letter from the Secretary of War, transmitting a report of engineer concerning protection of, from ice.....	14	41	
Norfolk, Hampton River, Pagan Creek, and the Chickahominy and Blackwater Rivers in Virginia, letter from the Secretary of War, transmitting report of engineer on improvement of.....	14	60	
Hampton River, letter of Secretary of War, transmitting reports of engineer upon the improvement of.....	14	60	
Hayden, Professor F. V., preliminary report of the field-work of the United States geological and geographical survey of the Territories by.....	8	1	5
Hot Springs (Arkansas) Commission, report of the.....	8	1	5
Hurtt, Captain F. W., assistant quartermaster, testimony and papers in case of, transmitted by Secretary of War.....	17	85	
I.			
Illinois, survey of lake-beds, letter from Secretary of Interior in response to a resolution of the House in reference to the survey of.....	17	83	
Indian Affairs, report of the Commissioner of (vol. 1).....	8	1	5
papers accompanying.....	8	1	5
report of the Commissioner of, of disbursements for the Indian Department for year ending June 30, 1877.....	13	6	
Indiana, survey of lake-beds, letter from Secretary of Interior in response to a resolution of the House, in reference to the survey of.....	17	83	
Indians, letter from the Secretary of War, in response to a resolution of the House concerning the protection of the residents of Colorado against the.....	17	91	
letter from the Secretary of the Interior relative to land-entries by, in Michigan, and certain frauds practiced upon.....	17	82	
Informers, letter from the Secretary of the Treasury, transmitting a detailed report of the sums allowed as compensation to officers of customs and.....	10	26	
Insane, Government Hospital for, report of the operations of, by the board of visitors (vol. 1).....	8	1	5
Inspectors of customs, letter from the Secretary of the Treasury, transmitting letter from Commissioner of Customs proposing an alteration of certain sections of the Revised Statutes fixing the compensation of.....	14	36	
Interest paid to national banks, letter from the Secretary of the Treasury, transmitting a statement of the sums paid to..	14	34	
Internal Revenue, Commissioner of, annual report of.....	12	4	
Interior Department, accountability of disbursing-clerk of, letter from the Secretary, recommending that he be relieved.....	14	54	

Subject.	Volume.	No.	Part.
Interior Department, employés who have served in the military and naval service, letter from the Secretary, transmitting a list of	17	94	
contingent fund of, letter from the Secretary of, transmitting detailed account of expenditure of	14	42	
Interior, Secretary of the, annual report of the (vol. 1)	8	1	5
letter from, relating to land entries by Indians in Michigan	17	82	
annual report of the Commissioner of the General Land Office (vol. 1)	8	1	5
papers accompanying the above report (vol. 1)	8	1	5
report of the Commissioner of Indian Affairs	8	1	5
papers accompanying the same (vol. 1)	8	1	5
report of the commission appointed to meet the Sioux Indian chief Sitting-Bull, with a view to avert hostile incursions into the territory of the United States from the Dominion of Canada (vol. 1)	8	1	5
report of the Commissioner of Pensions	8	1	5
report of the field-work of the United States geological and geographical survey of the Territories under Professor Hayden (vol. 1)	8	1	5
report on the geological and geographical survey of the Rocky Mountain region by J. W. Powell (vol. 1)	8	1	5
report of the commission appointed under act of March, 1877, regarding the Hot Springs reservation in the State of Arkansas (vol. 1)	8	1	5
report of the government directors of the Union Pacific Railroad (vol. 1)	8	1	5
report upon the Yellowstone National Park (vol. 1)	8	1	5
report of the Columbia Institution for the Deaf and Dumb (vol. 1)	8	1	5
report upon Freedman's Hospital and Asylum (vol. 1)	8	1	5
report upon the Columbia Hospital for Women and Lying-in Asylum (vol. 1)	8	1	5
report of the board of visitors upon the operations of the Government Hospital for the Insane (vol. 1)	8	1	5
report of the Architect of the Capitol	8	1	5
tabular statements of the disbursements made from the appropriations for the Indian Department for the fiscal year ending June 30, 1877, and of salaries and incidental expenses paid at each agency in the Indian service during said period	10	6	
deficiency for the contingent expenses of the General Land Office, letter from the Secretary of the Interior concerning	10	13	
contingent fund of the Interior Department, letter from the Secretary of the Interior, transmitting detailed account of expenditures of	14	42	
accountability of disbursing-clerk, letter from the Secretary of the Interior, recommending that the disbursing-clerk of the department be relieved from responsibility of the payment of certain forged vouchers	14	54	
adoption of the metrical system, letter from the Secretary, transmitting report concerning	14	71	
Yellowstone National Park, letter from the Secretary in regard to the better protection of, from injury	17	75	
lands granted the State of Michigan for railroad purposes, letter from the Secretary, transmitting information concerning	17	77	
geological and geographical surveys, letter from the Secretary, transmitting a report of Professor Powell in regard to surveys, in response to a resolution of the House	17	80	
geological and geographical surveys, letter from the Secretary, in response to a resolution of the House, transmitting a report of Professor Hayden	17	81	

Subject.	Volume.	No.	Part.
Interior, Secretary of the, survey of lake-beds in Indiana and Illinois, letter from the Secretary in response to a resolution of the House, in reference to the	17	83	
employés in the Interior Department who have served in military and naval service, letter from the Secretary, transmitting a list of	17	94	
ravages of the locusts, letter from the Secretary, transmitting a report from the commission of entomologists on the, in Western States and Territories	17	95	
Iron, steel, and other metals, report of board for testing, transmitted by President	17	98	
Italy, letter from the Secretary of State, transmitting a letter from the Italian minister concerning the marks of respect shown to the memory of Victor Emanuel I, late King of	14	69	
J.			
Jetties, South Pass, Mississippi River, letter from the Secretary of War, relative to report of M. R. Brown, engineer, relating to the work on	14	37	
Joint commission, report of the, created to direct and supervise the completion of the Washington Monument	10	1	8
Judge-Advocate-General, report of	2	1	2
K.			
Kansas Pacific Railroad, letter from the Attorney-General of the United States, in response to a resolution of the House in relation to suits against the	17	76	
Khedive of Egypt, letter from the Secretary of War, concerning a decoration conferred upon Assistant Surgeon Wilson, United States Army, by the	10	23	
King Victor Emanuel, of Italy, letter from the Secretary of State, transmitting a letter from the Italian minister concerning the marks of respect shown to the memory of	14	69	
L.			
Lake-beds, survey of, in Indiana and Illinois, letter from the Secretary of the Interior, in response to a resolution of the House in reference to	17	83	
Lake Michigan and Sturgeon Bay Ship Canal, letter from the Secretary of War, transmitting report of engineer on the improvement of	14	44	
Land-grant railroads, letter from the Secretary of War, relative to a decision of the Supreme Court upon the matter of payments to	10	20	
Land entries by Indians in Michigan, letter from the Secretary of the Interior, relating to	17	82	
Land Office, letter from the Secretary of the Interior, concerning deficiency for contingent expenses of the General Land Office	10	13	
Land Office, report of the Commissioner of the General Land Office (vol. 1)	8	1	5
Lands granted to the State of Michigan for railroad purposes, letter from the Secretary of the Interior, transmitting information concerning lands granted to	17	77	
Leavenworth military prison, report concerning (vol. 1)	2	1	2
Legal-tender notes, letter from the Secretary of the Treasury, in reference to sale of United States bonds for outstanding	14	63	
Locusts, ravages of, letter from Secretary of Interior, transmitting a report from commission of entomologists on the	17	95	
Loss of the steamer Metropolis, letter from the Secretary of the Treasury, transmitting report of the Life-Saving Service in reference to	14	58	
Louisiana, commission sent to, by the President, letter from the Secretary of State, transmitting correspondence, &c	17	97	

Subject.	Volume.	No.	Part.
M.			
Mail steamship service, letter from the Postmaster-General, in compliance with the resolution of the House, transmitting a tabular statement of the ocean, of foreign countries	14	38	
Mails, offer for carrying land and water, established, &c	16	51	
McAllister, dredge-boat, letter from the Secretary of War, in relation to	14	67	
Metrical system, letter from the Secretary of the Treasury, transmitting, in response to a resolution of the House, reports concerning adoption of the, of weights and measures	14	71	
letter from the Secretary of the Interior in regard to the above	14	71	2
letter from the Secretary of War in regard to the above	10	8	
Metropolis, loss of steamer, letter from the Secretary of the Treasury, transmitting report of the Life-Saving Service in reference to	14	58	
Michigan, land granted to, for railroad purposes, letter from Secretary of Interior, transmitting information concerning	17	77	
letter from Secretary of the Interior, relating to land entries by Indians in the State of	17	82	
Military Academy, report of visitors to (vol. 1)	2	1	2
letter from the Attorney-General, in response to a resolution of the House in reference to the appointment of cadets to the Naval and, by the President	14	70	
Military posts, abondonment of certain, letter from the Secretary of War concerning	17	79	
Military post, site for in Texas, letter from the Secretary of War relative to the donation of land as a	10	14	
Military roads in Arizona, letter from the Secretary of War in relation to certain	10	21	
Mint, report of the Director of	11	2	
Mississippi River, jetties, South Pass, letter from Secretary of War, relative to the report of M. R. Brown, engineer, relating to the work of Mr. Eads at	14	37	
improvement of Southwest Pass of, letter from the Secretary of War, transmitting report of engineer upon the improvement of	14	61	
South Pass of, letter from the Secretary of War, transmitting a report upon the improvement of	14	52	
reservoirs to improve the navigation of, letter from the Secretary of War, transmitting information concerning the effect of	14	49	
improvement of, letter from the Secretary of War, transmitting report of Chief of Engineers upon the necessity for	10	22	
South Pass of, report of the engineer on the improvement of	2	1	2
Mississippi, veto of the bill for special term of United States court in, message from the President of the United States assigning reasons for	14	62	
Missouri River, letter from the Secretary of War, transmitting report of Chief of Engineers on the improvement of	10	22	
Moline Water-Power Company, letter from the Secretary of War, transmitting communication from the president of, of Moline, Ill., with a report of the Chief of Ordnance thereon	17	87	

Subject.	Volume.	No.	Part.
N.			
National banks, letter from the Secretary of Treasury, transmitting a statement of the sums paid for interest in coin and currency upon bonds held by	14	34	
Naval Academy, appointment of cadets to, letter from Attorney-General in reference to	14	70	
Navy Department, civil employés in, letter from the Secretary of Navy, transmitting a list of civil employés in that department for year ending December 31, 1877	10	29	
Navy, letter from the Secretary of War, in response to a resolution of House, transmitting a list of persons in the employ of that department who have rendered service in the Army or	17	99	
Navy, Secretary of, annual report of the	7	1	3
transmits list of civil employés in his department	10	29	
Navy, State, and War Department buildings, report of the engineer upon the state of (vol. 1)	2	1	2
New Mexico and Colorado, letter from the Secretary of War, transmitting reports on lines of communication between	14	66	
New York, letter from the Secretary of War, transmitting report relative to improvement of Flushing Bay	17	74	
Norfolk Harbor, letter from the Secretary of War, transmitting a report of engineers upon the improvement of	17	60	
O.			
Ocean mail steamship service, letter from the Postmaster-General, in compliance with a resolution of the House, transmitting a tabular statement of, of foreign countries	14	38	
Officers, commutation allowed in certain cities, letter from Secretary of War, transmitting a list of, who received	14	48	
Ordnance, Chief of, annual report of (vol. 3)	5	1	2
P.			
Pacific Railroad, Kansas, letter from the Attorney-General, in response to a resolution of the House in relation to suits against the	14	76	
Pagan Creek, Virginia, letter from Secretary of War, transmitting reports of engineers upon the improvement of, &c	14	60	
Painting, message from the President, informing Congress that he had delivered to Mrs. Elizabeth Thompson a copy of the joint resolution accepting	14	47	
Pardons, letter from the Attorney-General, in response to a resolution of the House, transmitting a list of, by the President between March 4, 1877, and May 20, 1878	17	100	
Park, Yellowstone National, letter from the Secretary of the Interior in regard to the better protection of the	17	75	
Patents, annual report of the Commissioner of	13	61	
Paymaster-General, annual report (vol. 1)	2	1	2
Payments to informers, letter from the Secretary of the Treasury, transmitting a detailed report of the sums allowed as compensation to officers of customs	10	26	
Pensions, annual report of the Commissioner of (vol. 1)	8	1	5
Pennsylvania avenue, letter from the President, transmitting report of Commissioners upon the repavement of	10	11	
Postmaster-General, report of the	7	1	4
transmits a tabular statement of the ocean mail steamship service of foreign countries	14	38	
offer for carrying mails, land and water mails established, &c	16	51	
Powell, J. W., report on the geographical and geological survey of the Rocky Mountain region (vol. 1)	8	1	5
on the arid regions of the United States	13	73	

Subject.	Volume.	No.	Part.
President of the United States, transmits annual message and accompanying documents, second session, Forty-fifth Congress	1	1	1
transmits papers relating to the foreign relations of the United States, preceded by a list of papers and followed by an index of persons and subjects	1	1	1
transmits report of the joint commission created to direct and supervise the completion of the Washington Monument	10	1	8
transmits report of the commission appointed to examine into the security of the public buildings in the city of Washington against fire	10	10	
transmits report of commissioners upon the repavement of Pennsylvania avenue	10	11	
transmits a special report upon the subject of forestry, by the Commissioner of Agriculture	10	24	
transmits the recent correspondence between the Governments of Venezuela and the United States, in relation to the Venezuelan Mixed Claims Commission, in answer to a resolution of the House	10	30	
transmits a report of the Attorney-General, in answer to a resolution of the House, upon the operation of the Union Pacific Railroad and its branches	10	32	
transmits report of the commission appointed under the act of Congress approved March 3, 1873, relative to the causes of steam-boiler explosions	14	40	
informs Congress that he has delivered to Mrs. Elizabeth Thompson a copy of the joint resolution accepting a painting tendered by her	14	47	
communicates, by message, his reasons for withholding approval of the bill (H. R. 1093) entitled "An act to authorize the coinage of the standard silver dollar and to restore its legal-tender character"	14	59	
communicates, by message, his reasons for withholding approval of the bill (H. R. 3072) of the House authorizing a special term of the circuit court of the United States for the southern district of Mississippi	14	62	

Subject.	Volume.	No.	Part.
President of the United States, transmits, in response to a resolution of the House, a report from the Secretary of State in reference to the seizure of the steamer Virginius	14	72	
transmits the documents and proceedings of the Halifax Commission, 1877 (Fishery Commission), under the treaty of Washington of May, 1871, in three volumes	18, 19, 20	89	
transmits, by message, a communication from the Secretary of State, in response to a resolution of the House, in relation to the convention for establishing an international bureau of weights and measures	17	96	
transmits letter from the Attorney-General, in reference to the appointment of cadets to the Naval and Military Academies by	14	70	
transmits letter from the Secretary of State, transmitting correspondence, &c., in connection with the commission appointed by the, to visit Louisiana, in April, 1877	17	97	
transmits report of the board for testing iron, steel, and other metals	17	98	
Public buildings, report of the commission appointed to examine into the security of the public buildings in the city of Washington against fire	10	10	
Q.			
Quartermaster-General, report of (vol. 1)	2	1	2
Quarters, commutation of, letter from the Secretary of War, recommending an amendment of the statutes in relation to	10	17	
R.			
Railroads, land-grant, letter from the Secretary of War, relative to a decision of the Supreme Court upon the matter of payment to	10	20	
lands granted the State of Michigan for, letter from the Secretary of Interior, transmitting information concerning	17	77	
Union Pacific and its branches, message from the President, in answer to a resolution of the House, transmitting a report of the Attorney-General upon the operation of	10	32	
location of Southern and Texas Pacific, letter from the Secretary of War concerning the, through Fort Yuma reservation and across the Colorado River	10	33	
Reappropriations for 1875 and prior years, letter from the Secretary of the Treasury, transmitting estimates of	14	46	
Receipts, decrease of, from internal revenue, letter from Commissioner of Internal Revenue, showing	14	50	
Receipts and expenditures, an account of, for the year ending June 30, 1873	14	35	

Subject.	Volume.	No.	Part.
Receipts and expenditures, an account of, for the year ending June 30, 1874	17	79	
Repairs on the Speiden building, letter from the Secretary of War, recommending an appropriation for	10	15	
Repavement of Pennsylvania avenue, report of the commissioners upon the	10	11	
Reservoirs, to promote the navigation of the Mississippi River, letter from the Secretary of War, transmitting information concerning the effect of	14	49	
Revenue, prevention of frauds in customs, letter from the Secretary of the Treasury, transmitting draught of a bill to prevent	17	86	
investigation of the customs service, letter from the Secretary of the Treasury, transmitting papers relative to	10	25	
Roberts, Marshall O., report of the Quartermaster-General, relative to the names, ages, &c., of the steamships purchased of, and owned in part or whole by	17	92	
S.			
Saginaw River, proposed bridge over, letter from the Secretary of War, transmitting report relative to	14	57	1,2
Saint Croix River, letter from the Secretary of War, transmitting report upon	14	53	
Sale of United States bonds for outstanding legal-tender notes, letter from the Secretary of the Treasury, in response to resolution of the House concerning	14	63	
Seamen, certificates of citizenship to, during year ending December, 31, 1877, letter from the Secretary of State, transmitting number of	14	68	
Security of public buildings against fire in the city of Washington, report of commission	10	10	
Signal Officer, annual report of Chief (vol. 4)	6	1	2
Silver bill, veto of, message from the President, assigning reasons for withholding his signature to (H. R. 1093)	14	59	
Sitting Bull, report of the commission appointed to visit (vol. 1)	8	1	5
Soldiers' Home, report of the board of commissioners (vol. 1)	2	1	2
South Pass of the Mississippi River, improvement of, report of engineer (vol. 1)	2	1	2
letter from the Secretary of War on above	14	59	
Southwest Pass of the Mississippi River, letter from the Secretary of War on the improvement of	14	64	
Southern Pacific Railroad, location of, letter from the Secretary of War	10	33	
Speiden building, repairs of	10	15	
State, War, and Navy Department building, report of engineers on (vol. 1)	2	1	2
State Department, expenditure of the, letter from the Secretary, transmitting statement of	10	9	
State, Secretary of, transmits statement of expenditures in his department	10	9	
transmits abstract of returns made by the collector of customs of the number of seamen having received certificates of citizenship during 1877	14	68	
transmits letter from the Italian minister, concerning marks of respect shown the memory of Victor Emanuel I, late King of Italy	14	69	
transmits correspondence, &c., in connection with the commission appointed by the President to visit Louisiana in April, 1877	17	97	
Steam-boiler explosions, report of commission	14	40	

Subject.	Volume.	No.	Part.
Steamer Virginius, message from the President, transmitting a report from the Secretary of State in reference to seizure of the	14	72	
Suits against the Kansas Pacific Railroad, letter from the Attorney-General of the United States, in relation to	17	76	
Surgeon-General, annual report of the, for the year ending June 30, 1877 (vol. 1)	2	1	2
Surgeon at West Point, New York, letter from the Secretary of War, transmitting report of	10	28	
Surveys, geological and geographical, letter from the Secretary of the Interior, transmitting report of Professor Hayden upon	17	81	
Surveys of lake-beds in Indiana and Illinois, letter from the Secretary of the Interior in reference to	17	83	
Surveys by the War Department for the last ten years, letter from the Secretary of War relating to	17	88	
T.			
Territories, preliminary report of the field-work of the United States Geological and Geographical Survey of the (vol 1)	8	1	5
Texas, letter from the Secretary of War, transmitting report of Colonel Hatch on the subject of El Paso troubles in	17	84	
letter from the Secretary of War, transmitting reports of the commission appointed to investigate the El Paso troubles in	17	93	
Texas Pacific and Southern Pacific Railroad, letter from the Secretary of War, concerning the location of, through Fort Yuma reservation and across the Colorado River	10	33	
Texas, site for a military post in, letter from the Secretary of War, relative to the donation of lands for	10	14	
Thompson, Mrs. Elizabeth, letter from the President, informing Congress that he had delivered a copy of a joint resolution of Congress accepting a painting tendered by her to	14	47	
Treasurer of the United States, annual report of, for year ending June 30, 1877	11	2	
Treasury, Secretary of, annual report of, on the state of the finances	11	2	
Papers accompanying the above:			
Report of the Commissioner of Internal Revenue	11	2	
Report of the Comptroller of the Currency	11	2	
Report of the Director of the Mint	11	2	
Report of the First Comptroller	11	2	
Report of the First Auditor	11	2	
Report of the Treasurer of the United States	11	2	
Report of the Superintendent of the Coast Survey	11	2	
Report of the Commissioner of Customs	11	2	
Report of the Commissioner of Indian Affairs	11	2	
Report of the Register of the Treasury	11	2	
Treasury, Secretary of, transmits estimates of appropriations for fiscal year ending June 30, 1879	13	5	
transmits a statement in reference to the interest of the government in the Dismal Swamp Canal	10	19	
transmits papers relative to the investigation of the customs service	10	25	
transmits report of the sums allowed as compensation to officers of customs and informers for fiscal year ending June 30, 1877	10	26	
transmits estimates of appropriations for payment of claims due prior to July 1, 1875	10	27	
transmits list of claims allowed under the act of July 4, 1864	10	31	

Subject.	Volume.	No.	Part.
Treasury, Secretary of, transmits answer to resolution of the House, with statement of the sums paid for interest, in coin and currency, upon bonds held by national banks..	14	34	
transmits an account of the receipts and expenditures for the year ending June 30, 1873	15	35	
transmits a copy of a letter from the Commissioner of Customs, relative to the compensation of inspectors of customs	14	36	
transmits an account of the receipts and expenditures for the year ending June 30, 1874	14	39	
transmits estimates of deficiencies in appropriations for the year 1878 and prior years	14	45	
transmits estimates of amounts to be reappropriated for the year 1875, and for prior years	14	46	
transmits a communication from the Commissioner of Internal Revenue, showing a decrease of receipts for the current fiscal year	14	50	
transmits report of the Life-Saving Service, relative to the loss of the Steamer Metropolis	14	58	
transmits answer to a resolution of the House in reference to the sale of United States bonds for outstanding legal-tender notes	14	63	
transmits a statement of emoluments and fees of customs officers	14	65	
communicates, in response to the resolution of the House relative to the adoption of the metrical system, and transmits certain reports in reference thereto	14	71	
communicates, in response to a resolution of the House, relative to duties on foreign imports	17	78	
transmits draught of a bill to prevent frauds in customs revenues	17	86	
transmits annual report of the Chief of Bureau of Statistics	14	90	
U.			
Union Pacific Railroad, message from the President, transmitting, in answer to a resolution of the House, a report of the Attorney-General upon the operation of the	10	32	
report of the government directors of the, for the year ending June 30, 1877, (vol. 1)	8	5	
United States troops, communication from the Secretary of War, showing the distribution of	14	55	
V.			
Venezuelan Mixed Claims Commission, message from the President, in answer to a resolution of the House, transmitting the recent correspondence between the Governments of Venezuela and the United States in relation to the	10	30	
Veto of the silver bill, message of the President, with his reasons for withholding his approval of the silver bill (H. R. 1093)	14	59	

Subject.	Volume.	No.	Part.
Veto of the bill for special term of United States court in Mississippi. Message from the President, assigning his reasons for withholding his approval of said bill (H. R. 3072)	14	62	
Virginius, steamer, message from the President, transmitting, in compliance with a resolution of the House, a report from the Secretary of State in reference to the seizure of	14	72	
W.			
War Department, surveys by the, letter from the Secretary of War, in response to a resolution of the House, relating to surveys conducted by, for the last ten years	17	88	
list of clerks in the, letter from the Secretary of War, transmitting	10	16	
War Department building, report of the engineers in charge of.	2	1	2
War, Secretary of, annual report of (vol. 1)	2	1	2
Papers accompanying the above:			
Report of the General of the Army	2	1	2
Report of the Judge-Advocate-General	2	1	2
Report of the Quartermaster-General	2	1	2
Report of the Commissary-General of Subsistence	2	1	2
Report of the Surgeon-General	2	1	2
Report of the Paymaster-General	2	1	2
Report of the Board of Visitors to the United States Military Academy	2	1	2
Report of the Board of Commissioners of the Soldiers' Home	2	1	2
Report on the State, War, and Navy Department buildings.	2	2	2
Reports upon the improvement of the South Pass of the Mississippi River	2	1	2
Report concerning Leavenworth military prison	2	1	2
Report of the freedmen's branch of the Adjutant-General's Office	2	1	2
Report of the Chief of Engineers (volume 2, parts 1 and 2)	3, 4	1	2
Report of the Chief of Ordnance (volume 3)	5	1	2
Report of the Chief Signal Officer (volume 4)	6	1	2
War, Secretary of, transmits reports of chiefs of bureaus upon the adoption of the metrical system, in response to a resolution of the House	10	8	
transmits report of the Adjutant-General in the case of George A. Armes	10	12	
communicates relative to the donation of land as a site for a military post in Texas	10	14	
communicates, recommending an appropriation to repair the Speiden building	10	15	
transmits list of clerks in the War Department	10	16	
communicates, recommending an amendment of the statutes in relation to commutation of quarters, fuel, and forage	10	17	
transmits estimates of appropriations for certain deficiencies in the appropriations for the Army	10	18	
communicates relative to a decision of the Supreme Court upon the matter of payments to land grant railroads	10	20	
communicates relative to certain military roads in Arizona	10	21	
transmits report of Chief of Engineers upon the necessity for the improvement of the Mississippi, Missouri, and Arkansas Rivers	10	22	

Subject.	Volume.	No.	Parts.
War, Secretary of, communicates concerning a decoration conferred upon Assistant Surgeon Wilson, United States Army, by the Khedive of Egypt	10	23	
transmits the report of the surgeon at West Point, N. Y	10	28	
communicates concerning the location of the Southern Pacific and Texas Pacific Railroads through Fort Yuma reservation and across the Colorado River	10	33	
communicates relative to the report of M. R. Brown, captain of engineers, relative to the work of Mr. Eads at South Pass, Mississippi River	14	37	
transmits report of the engineer concerning the best method of protecting the harbor of Cincinnati from ice	14	41	
communicates, recommending an appropriation for six new buildings at Fort Monroe, Virginia	14	43	
transmits report of the engineer on the improvements of Sturgeon Bay and Lake Michigan Ship Canal and Harbor	14	44	
transmits a list of officers who received commutation, fuel, forage, and quarters in certain cities	14	48	
transmits information concerning the effect of reservoirs upon the navigation of the Mississippi River	14	49	
transmits a report upon the improvement of the South Pass of the Mississippi River	14	52	
transmits report upon Saint Croix River	14	53	
communicates, showing the distribution of United States troops	14	55	
transmits report of engineer upon the improvement of the "Gut" opposite Bath, Me	14	56	
transmits report of engineer upon bridging the Saginaw River, at East Saginaw, Mich	14	57	1,2
transmits report of engineer upon the improvement of Norfolk Harbor, Hampton River, Pagan Creek, and the Chickahomony and Blackwater Rivers, in Virginia	14	60	
transmits report of engineer upon the improvement of the Southwest Pass of the Mississippi River	14	64	
transmits reports on lines of communication between Colorado and New Mexico	14	66	
communicates in relation to the disappearance of the United States dredge-boat McAlister	14	67	
transmits report relative to the improvement of Flushing Bay, New York	17	74	
communicates concerning the abandonment of certain military posts	17	79	
transmits report of Colonel Hatch on the subject of the El Paso troubles	17	84	
transmits testimony and papers in case of Captain F. W. Hurtt, assistant quartermaster	17	85	
transmits communications from the president of the Moline Water Power Company, of Moline, Ill., with report of the Chief of Ordnance thereon	17	87	

Subject.	Volume.	No.	Parts.
War, Secretary of, communicates, in response to a resolution of the House, giving information concerning the surveys conducted by the department in the last ten years	17	88	
communicates, in response to a resolution of the House, concerning the protection of the residents of Western Colorado against the Indians	17	91	
transmits report of the Quartermaster-General relative to the names, ages, &c., of the steamships purchased of and owned, in part or whole, by Marshall O. Roberts, of New York	17	92	
transmits report of commission on El Paso troubles in Texas	17	93	
transmits a list of persons in the employ of the departments who have rendered service in the Army or Navy of the United States	17	99	
transmits report of survey of Connecticut River	17	101	
Weights and measures, international bureau of, message from the President, transmitting a communication from the Secretary of State in relation to the convention for re-establishing	17	96	
West Point, N. Y., sanitary report of surgeon at, transmitted by the Secretary of War	10	28	
Wilson, W. J., assistant surgeon United States Army, letter from the Secretary of War, concerning a decoration conferred upon, by the Khedive of Egypt	10	23	
Y.			
Yellowstone National Park, letter from the Secretary of the Interior in regard to the better protection of, from injury	17	75	
report on the (vol. 1)	8	1	5

45TH CONGRESS, 2d Session. } HOUSE OF REPRESENTATIVES. { Ex. Doc. 1, Part 3.

REPORT

OF THE

SECRETARY OF THE NAVY;

BEING PART OF

THE MESSAGE AND DOCUMENTS

COMMUNICATED TO THE

TWO HOUSES OF CONGRESS

AT THE

BEGINNING OF THE SECOND SESSION OF THE FORTY-FIFTH CONGRESS.

WASHINGTON:
GOVERNMENT PRINTING OFFICE.
1877.

CONTENTS.

REPORT OF THE SECRETARY OF THE NAVY.

	Page.
Number of vessels	3
Foreign squadrons and ocean service	3
Receiving and training ships and vessels in ordinary	4
Vessels under repair, and estimates of cost	4
Condition and employment of the iron-clads	5
Tug-boats, employment and condition	6
Personnel of the Navy	6
Situation and resources of the United States, their commerce, and the Navy as an ally	8
Disposal of useless ships	11
Our Navy as an aggressive force, and means of defense	12
Suggestions as to its improvement	12
Estimates and expenditures	13
Navy pension fund	14
Pay of the Navy—appropriations and expenditures	16
Naval Academy	17
Naval constructors	18
Navy yards—condition, &c	19
Torpedoes	24
Training system	25
Banking system in the Navy	25
Hydrographic Office	26
Naval Observatory	26
Volunteer assistant surgeons	26
Purchase of iron	27
Seamen's clothing	28
Contracts and indebtedness	28

SUPPLEMENT.

Vessels of the United States Navy	33
Navy appropriations and expenditures, 1803–1877	36
Detailed movements of vessels	40

APPENDIX.

No. 1. Estimates for salaries, contingent; Navy Department building, contingent; Navy and postage	47
No. 2. Naval Academy—	
Report of Superintendent	48
Report of Board of Visitors	50
Cruise of practice ships	55
Estimates for Academy	69

Page.

No. 3. Bureau of Yards and Docks—
Report of Chief of Bureau 71
Abstract of offers for supplies 92
Estimates for salaries, &c., bureau 98
general maintenance, &c 98
naval asylum 98
repairs and preservation 99
civil establishment 99
No. 4. Bureau of Navigation—
Report of Chief of Bureau 101
Estimates of bureau 108
Report of Superintendent Naval Observatory 111
Report of Chief Signal Officer 117
Report Chief Hydrographer 118
Report of Superintendent Nautical Almanac 119
No. 5. Bureau of Equipment and Recruiting—
Report of Chief of Bureau 120
Estimates for salaries and other purposes 125
No. 6. Bureau of Ordnance—
Report of Chief of Bureau 127
Estimates for salaries and other purposes 132
Appendix of special reports 135
No. 7. Bureau of Medicine and Surgery—
Report of Chief of Bureau 202
Medical statistics and sick reports 207
Estimates for salaries and other purposes 252
No. 8. Bureau of Provisions and Clothing—
Report of Chief of Bureau 254
Estimates for salaries and other purposes 255
No. 9. Bureau of Steam Engineering—
Report of Chief of Bureau 261
Estimates for salaries and other purposes 272
No. 10. Bureau of Construction and Repair—
Report of Chief of Bureau 273
Estimates for salaries and other purposes 281
Abstract of offers for supplies 282
No. 11. Marine Corps—
Report of Commandant, of operations, &c 298
condition of barracks, &c 300
Estimates for quartermaster's department 302
for pay department 304
Abstract of offers for supplies 304
No. 12. Report of Superintendent of the Observatory, suggesting change of its locality 307
No. 13. Report of Superintendent of the Observatory on change of organization. 320
No. 14. Report of civil engineers on construction of wet basin at Norfolk 324
No. 15. Statements of indebtedness 331

REPORT

OF

THE SECRETARY OF THE NAVY.

WASHINGTON CITY, D. C.,
Navy Department, November 30, 1877.

SIR: I have the honor to submit the regular annual report of the condition and operations of the Navy Department.

The Navy consists of 67 steam and 23 sailing vessels, 23 iron-clads, 2 torpedo, 1 ferry, and 26 tug boats. The tonnage and displacement of each vessel will appear in an accompanying table, and the following statement is deemed necessary to a full understanding by Congress of the present condition of the Navy.

The foreign and ocean service is performed by six squadrons, composed as follows:

EUROPEAN SQUADRON, under command of Rear-Admiral William E. Le Roy: Trenton, flag-ship; Vandalia, Marion, Alliance, Gettysburg, and Despatch, the latter being assigned to special service in connection with the United States embassy at Constantinople.

ASIATIC SQUADRON, under command of Rear-Admiral Thomas H. Patterson: Tennessee, flag-ship, Kearsarge, Ashuelot, Monocacy, Alert, Ranger, and Palos. The Tennessee has been ordered home, her cruise having expired, and will probably return through the Suez Canal. She will be superseded by the Monongahela.

NORTH ATLANTIC SQUADRON, under command of Rear-Admiral Stephen D. Trenchard: Powhatan, flag-ship, Plymouth, Ossipee, Swatara, Enterprise, and Huron.

The Huron was wrecked on November 24, 1877, on the coast of North Carolina, at a point near Nags Head. She sailed from New York under instructions to make a scientific reconnaissance of the coast of Cuba, and arrived at Hampton Roads on the 17th November. On the morning of the 23d she left Hampton Roads, and shortly after 1 o'clock a. m. of the next day struck upon the beach and was wrecked. She encountered a moderate gale and a heavy sea from the eastward, but being in good condition, well manned, and with her engines and machinery in perfect order, it is believed she could have encountered the storm without harm if she had remained out in the open sea. She had one hundred and thirty-two officers and men on board, thirty-four of whom were saved, and the remaining ninety-eight lost, including the commander. I have

organized a court of inquiry to investigate all the facts connected with this unfortunate event, and will make it the subject of a special communication to Congress when the result is ascertained.

SOUTH ATLANTIC SQUADRON, under command of Commodore E. T. Nichols: Hartford, flag-ship, and Essex.

NORTH PACIFIC SQUADRON, under command of Rear-Admiral Alexander Murray: Pensacola, flag-ship, and Lackawanna. To prevent an anticipated outbreak of the Indians, the Lackawanna was recently sent to Puget's Sound, and, after having assured a peaceful adjustment of all impending difficulty, has returned to San Francisco.

SOUTH PACIFIC SQUADRON, under command of Rear-Admiral George H. Preble: Omaha, Onward, and Adams.

The following are employed as receiving-ships:

Colorado and Vermont, at New York; Franklin, at Norfolk; Wabash, at Boston; Wyoming and Relief, at Washington; Independence, at Mare Island; and St. Louis, at League Island.

The following as training-ships:

Minnesota, at New York; Constitution, at Philadelphia; Saratoga, at Norfolk; Dale, as instruction-ship at Annapolis; St. Mary's, as marine-school ship at New York, and Jamestown as marine-school ship at San Francisco.

The following are in ordinary:

Niagara, at Boston; Susquehanna, Shenandoah, and Supply, at New York; Congress, Kansas, and Sabine, at Kittery; Narragansett, Saco, Nyack, and Cyane, at Mare Island; Shawmut and Savannah, at Norfolk; Yantic and Frolic, at Washington. The Savannah is fitted for an ordnance store-ship.

The following are laid up:

Florida, at New London; Iowa, at Boston; Lancaster, at Kittery; Brooklyn, at New York; Worcester and Juniata, at Norfolk; Iroquois, at Mare Island; and Constellation, used as practice-ship, at Annapolis.

The following are on the stocks:

Connecticut and Pennsylvania, at Boston; Java and New York, at New York; and New Orleans, at Sackett's Harbor.

The following are undergoing repairs:

Richmond and Wachusett, at Boston; Alaska, at New York; Benicia and Tuscarora, at Mare Island; Ticonderoga, at Kittery; and Canandaigua, at Norfolk.

It is estimated that the cost of these repairs will be about as follows: Richmond, $126,000; Alaska, $100,000; Benicia, $70,000; Ticonderoga, $90,000; Canandaigua, $60,000; Wachusett, $50,000; and Tuscarora, $28,000, making an aggregate of $524,000. These vessels will be ready for sea, it is believed, during the present fiscal year.

The following are in progress of construction: Quinnebaug, at League Island; Galena, at Norfolk; Mohican, at Mare Island; and Nipsic, at Washington.

The Quinnebaug will be soon ready for sea. The Galena and Nipsic are progressing as rapidly as possible. Work on the Mohican has been suspended to await the action of Congress.

The following are so much decayed as to be unfit for repairs or completion: Connecticut, Iowa, and Pennsylvania, at Boston; Java and Susquehanna, at New York; Congress, Kansas, and Sabine, at Kittery; Worcester and Shawmut, at Norfolk; Saco, Nyack, and Cyane, at Mare Island; Frolic, at Washington; and New Orleans, at Sacket's Harbor.

The Michigan is in commission on Lake Erie, in readiness to render such assistance as the commerce of the lakes may require. The Tallapoosa is used as a dispatch vessel between Washington, Norfolk, League Island, New York, Newport, New London, Boston, and Kittery. The Rio Bravo was sent up the Rio Grande River more than a year ago, and remains there, anchored at Brownsville, from which place she cannot now proceed either up or down stream in consequence of the shallowness of the water. She can, therefore, only render such assistance to that exposed frontier as could be afforded by a local fortification with the same number of men and guns, or by transferring the men for military service on shore in case of necessity. The New Hampshire is now lying at Port Royal. The Santee is used as a gunnery ship at Annapolis; the Jamestown as a marine school-ship at San Francisco, under act of Congress June 20, 1874; the Pawnee for storing coal at Port Royal; the Guard for astronomical service in the Atlantic; and the Onward as a store-ship at Callao.

The following twelve iron-clad vessels are in commission and partial commission:

Ajax, Catskill, and Lehigh, at Sandy Point, James River; Canonicus, at New Orleans; Montauk, Passaic, Saugus, and Wyandotte, at Washington; Nahant, at League Island; Manhattan and Mahopac, at Norfolk; and Nantucket, at Annapolis. These vessels have to be kept in fresh water when not in actual service, in consequence of the injury they receive from barnacles and oysters when exposed for any length of time to the salt water of the ocean. They are unfit for sea-service, and are only useful for harbor and coast defense. In case of an attack by an enemy upon any of the commercial cities lying on our coasts, they would be of incalculable value for this purpose. They have no power to move against head seas, inasmuch as, being only about twelve inches out of water, every sea breaks over them. It is not deemed best to keep them all in commission for sea-service, but merely in such condition, and at such convenient places in fresh water, as will hold them in readiness for active employment at any time when needed.

The following are in ordinary:

Camanche, at Mare Island; Dictator and Jason, at League Island.

The following are in progress of construction:

Amphitrite, at Wilmington, Delaware; Miantonomoh and Puritan, at Chester, Pennsylvania; Monadnock, at Vallejo, California; and Ter-

ror, at Philadelphia. The work on the Amphitrite, Puritan, and Terror has been suspended in consequence of contracts therefor having been made when there was no money in the Treasury which could be expended for that purpose.

The Colossus is on the stocks at New York, but having been built of white-oak timber, is so decayed as not to be worth completing. The Massachusetts is in the same condition at Kittery; and the Oregon also at Boston. The Roanoke was transferred in part payment for work on the Puritan, by contract of March 3, 1877, which was suspended for reasons herein stated. The Severn was also transferred for work on the Puritan, by arrangement previous thereto.

The Manhattan is in dock at Norfolk, undergoing repairs, which, it is estimated, will cost about $3,000; and the Mahopac is at the same place, also needing and awaiting repairs.

Both of the torpedo-boats are in commission; Intrepid at New York, and Alarm, recently at Newport, but now under orders for Washin ton.

The following tug-boats are in ordinary:

Cohassett, at Boston; Pilgrim, at League Island; Rescue, at Washington; Sorrel, at League Island; and Speedwell, at Kittery. The latter has recently returned from a voyage to Halifax, under charge of Prof. S. F. Baird, United States Fish Commissioner.

The following are laid up:

Standish, at Norfolk; Spuyten Duyvil, at New York; and Blue Light, at New London.

The Catalpa is in running order at New York; Emerald at Kittery; Fortune at Norfolk; Glance at League Island; Jean Sands at Norfolk; Leyden undergoing repairs at Boston, at an estimated cost of $10,000; Mayflower and Wyandank at Annapolis; Monterey at Mare Island; Nina performing torpedo duty at Newport; Phlox in use at Naval Academy; Pinta attached to North Atlantic squadron; Rescue at Washington; Rocket undergoing repairs at New York, at an estimated cost of $500; Rose at Pensacola; Snowdrop at Norfolk; Triana undergoing repairs at Washington, at an estimated cost of $6,000; Grapeshot at New York, and Seaweed at Port Royal. The Blue Light and Sorrel are completely worthless and unfit for repair.

PERSONNEL.

The active list of the Navy is composed of 1 Admiral, 1 Vice-Admiral, 11 rear-admirals, one of whom, Rear-Admiral John Rodgers, is retained on the list, in addition to the 10 allowed by law, by reason of having received the thanks of Congress for gallantry; 25 commodores, 50 captains, 90 commanders, 80 lieutenant-commanders, 280 lieutenants, 100 masters, 71 ensigns, 77 midshipmen, 43 cadet-midshipmen, and 213 cadet-midshipmen on probation at the Naval Academy, all of whom are officers of the line.

Of the staff, there are 1 surgeon-general, 14 medical directors, 15 medical inspectors, 50 surgeons, 52 passed assistant surgeons, 44 assistant surgeons, 1 paymaster-general, 12 pay-directors, 13 pay-inspectors, 50 paymasters, 30 pasted assistant paymasters, 20 assistant paymasters; 1 engineer-in-chief, 69 chief engineers, 97 passed assistant engineers, 43 assistant engineers, 19 cadet-engineers, and 63 cadet-engineers on probation at the Naval Academy; 24 chaplains, 12 professors of mathematics, 1 secretary for the Admiral, and 1 for the Vice-Admiral; 1 chief constructor, 10 naval constructors, 5 assistant constructors, and 9 civil engineers.

The warrant-officers consist of 54 boatswains, 59 gunners, 50 carpenters, and 41 sailmakers. There are also 45 mates in the service.

There were in the service on the 24th day of November, 1877, 7,012 enlisted men and boys.

The retired list is composed of 41 rear-admirals, 26 commodores, 15 captains, 13 commanders, 14 lieutenant-commanders, 6 lieutenants, 13 masters, 5 ensigns, 2 midshipmen, 3 surgeons-general, 18 medical directors, 1 medical inspector, 2 surgeons, 2 passed assistant surgeons, 5 assistant surgeons, 3 paymasters-general, 5 pay-directors, 3 paymasters, 2 passed assistant paymasters, 2 assistant paymasters, 5 chief engineers, 17 passed assistant engineers, 23 assistant engineers, 1 chief constructor, 4 naval constructors, 7 chaplains, 4 professors of mathematics, 9 boatswains, 5 gunners, 11 carpenters, and 12 sailmakers.

The active-list is therefore composed of 829 officers of the line, 594 officers of the staff, and 249 warrant-officers.

The retired-list is composed of 135 officers of the line, 103 officers of the staff, 27 warrant-officers, and 4 professors of mathematics.

This statement of the condition and strength of the Navy is deemed necessary to enable Congress to adjust appropriations to the necessities of the service and the condition of the Treasury.

An effective navy is a positive necessity; but the main difficulty lies in deciding upon the point of efficiency to which it is expedient and proper to carry it. The leading nations of Europe have such close political relations that the fear of disturbing the existing balance of power is constantly communicating itself from one to the other, and thereby each is influenced to keep itself in readiness for any military or naval exigency that may arise. Hence the necessity for large standing armies and extensive navies. But what they may do or not do, as it regards their intercourse with each other, whether in peace or war, does not directly concern us as a nation, and yet it has such indirect relation to the United States, as one of the great powers of the earth, that our own policy must in some degree be influenced by theirs.

Our situation—about midway between Europe and Asia—forbids any immediate or direct interference by the United States with the affairs of the nations possessing either of those continents. Nor is it reasonable to expect that, occupied as the European nations are, and are likely to

be for many years to come, with questions which seem inseparable from their relations with each other, they will find it to their interests to adopt an aggressive policy toward the United States. We may safely adopt such a course, therefore, with reference to our Navy as is dictated by our own domestic interests alone, separated, as they are, except by commercial intercourse, from those of other nations.

Our constantly-increasing capacity to become one of the leading commercial nations, excites our national pride. Our agricultural productions—the basis of our prosperity—already exceed those of any other country, and are rapidly increasing. In many ways our condition is a controlling one, both as it regards our example and the necessities of other nations supplied by our industry. Not only have we given respectability to labor, but, in various ways, have increased its productiveness and value. In the mechanic arts we are unexcelled. Our mineral wealth is inexhaustible, and already is its vast importance recognized in the fact that we are supplying American iron to British workshops. The coal-fields of England are rapidly failing, on account of their immense depth, while ours are not only of incalculable extent, but near the surface. Everything, in fact, combines to show that we possess a rapidly-growing internal commerce, which only needs the fostering care of the government to secure to it an ultimate development which cannot be surpassed by that of any other nation. During the last year the value of this commerce transported on the various lines of railroads was estimated at $18,000,000,000, and during the present year, in consequence of the increased product and value of grain, it will greatly exceed that.

As our internal commerce increases beyond our own power of consumption, the excess must either find a foreign market or the loss falls upon the producer. All commercial nations understand this, and therefore their efforts to secure foreign markets for their exports. The greatness of Great Britain is in a considerable measure owing to the steadiness and consistency of her policy in this regard. There is no inlet in any sea where the vessels of her mercantile marine do not penetrate. Even at the present time, when our trade is slowly recovering from its paralysis and demanding additional means of supplying the wants of the thousands of meritorious artisans and workmen who are out of employment, her merchants and capitalists are actively engaged in making our foreign commerce tributary to their own by forcing us into dependence upon British vessels for the transportation of our surplus productions. They snatch the trade of a considerable portion of the American continent from our hands. Brazil exports to England annually over $112,000,000 of her products, for which she receives in exchange nearly the same amount of imports. This trade is carried on by direct lines of communication and, in a great measure by steamships to which large government subsidies are paid; while for the want of lines of steam communication between our Eastern cities and Rio, our most expeditious

route to Brazil is by England. And that country has secured similar advantages to her merchants over ours, although not in the same degree, with regard to the trade all along the eastern and western course of South America, as well as that with China, Japan, and Australia. Of the exports from China, more than three times as much go to Great Britain as come to the United States, and with the imports the difference is still greater.

The policy of the Japanese Government, induced by influences adverse to our commercial interests, has secured to the English and French lines of steamers almost its entire trade, while an American line of steam-vessels from Yokohama to Shanghai has been compelled to withdraw. Australia exports about $240,000,000 a year, and imports nearly as much; and almost this entire trade is carried on with England and her dependencies.

The superiority which both England and France have obtained over us with reference to this vast trade may be attributed in a large degree to the fact that each of these governments pays annually to its steam-lines between $4,000,000 and $5,000,000 in subsidies, while the Government of the United States has contributed to the superiority England has thus acquired by also paying subsidies to her steam-lines out of its own revenues. The result has been to increase the foreign over our domestic tonnage so steadily, since the close of the war, that our interest in ocean mercantile navigation is annually decreasing. Before the war our foreign export and import trade was carried on 100 per cent. more in American than in foreign vessels. Since the war it has been carried on 100 per cent. more in foreign than in American vessels. Until this condition of things is changed, our commercial independence cannot be established upon such a basis as it deserves to be.

While our Navy is not engaged in commerce, it is its important and necessary ally. It should be, at all times, ready to furnish it protection in whatsoever sea it may be required. All the nations should understand that we are as ready to afford it this protection as we are to avenge an insult to our national flag. Without foreign commerce, we must sink into inferiority; and without a Navy amply sufficient for this purpose, all the profits of our surplus productions will be transferred from the coffers of our own to those of foreign capitalists. The rewards of our own industry and enterprise belong to ourselves, and we cannot fully maintain our independence without their enjoyment. The profits of the American agriculturalists are as much their property as the lands which produce them, and those of the laborer and artisan, in all the spheres of life, should be held in as sacred regard. The government cannot withhold its fostering care from either without detriment to itself.

Is our Navy in its present condition sufficient to furnish the necessary amount of protection to our commerce? If we consider our commerce at its present stage of development, or are content to leave it to be transported abroad in foreign ships, and thus deprive the American producer

of the profits of his labor, it may be sufficient. But if we are to take the position among the commercial nations to which we are justly entitled; if we are to secure to our own people the right to transport the products of their industry into whatsoever part of the world they may be demanded, so that the profits may be returned to increase the aggregate of our national wealth, then, in my opinion, it is not in such condition. There may be ships enough in number if they were all in proper repair to increase our squadrons to a sufficient size for this purpose. To put them all in repair, however, would require a larger expenditure than is practicable in the present condition of the Treasury, and probably larger than would be justifiable at any time until our revenue from customs shall be sufficiently increased. As we may expect this from a gradual development of our commerce, so, as this occurs, we may gradually carry the Navy up to the point of necessary improvement; a point to be decided by the existing wants of trade.

It is manifestly a national duty to keep the Navy in such condition as to make it available in the future for all the purposes for which it may be designed. Considering it in this light, the estimates for the ensuing year have been made with reference only to ordinary expenditures, such as are absolutely necessary for repairs and limited construction. No new ships are estimated for, because that would involve an expenditure larger than the receipts into the Treasury will be likely to justify. Those now possessed and in progress will be sufficient for all ordinary purposes in time of peace, and if, from any emergency not anticipated, a larger number of vessels should be demanded, the experience of the late war has proved that we must rely upon our mercantile marine for a supply of the material of a Navy whenever it is demanded. This mercantile marine depends, for its effectiveness and extent, upon the protection given to commerce by the government, necessarily increasing with the increase of commerce. If we had steamship lines running directly from our own ports to all the leading commercial ports in the world, they would not only increase our revenue, but render it more easy to improvise a navy in the event of an unexpected emergency. These vessels are constructed for speed, and can be easily converted to purposes of naval warfare. They will increase in number and importance as our capacity to give naval protection to our commerce increases, and hence we find one ground for the necessity of keeping our Navy in a condition to furnish this protection.

The government, of course, contributes nothing directly toward building up our mercantile marine, as vessels for that purpose are necessarily built in private ship-yards. The enterprise of the owners of these is greatly to be commended, as some of the ships constructed at them are among the finest in the world. Those built at these yards for the government are supposed to be equal to any of their class, but it is not conceded that they are either superior to or more economically constructed than ships of the same class may be built at the government

navy-yards. One reason why heretofore it has cost more to build a ship at the latter than at the former yards has arisen out of the fact that the government has paid the same wages for eight hours of labor per day that private ship-builders have paid for ten hours; the latter obtaining, therefore, one-fifth more labor per day than the former. With this inequality removed, it is believed that ships may be built as cheap at the government as at private yards, and yet, at the same time, an increasing commerce will require the utmost energies of both.

Our ships have been built without sufficient care as to the character of the timber of which they are composed. Some of them, only a few years old, already begin to show such signs of decay as to require frequent repair in consequence of the use of timber not properly seasoned. A live-oak ship will last several times as long as one built of white oak. We have now on hand some of these white oak ships so far decayed as to render it questionable whether it would not be bad economy to repair them. Authority is given by law to sell these when they shall have reached this condition; but the consequence of such sales is that the proceeds are covered into the Treasury and are inapplicable to other naval purposes without reappropriation by Congress. If this were otherwise, and the value of ships so defective as not to be fit for repair could be applied to the improvement of those that are, our present Navy, though the number of its vessels would be somewhat reduced, could be made in a few years to consist of ships equal to any in the world of the same class. This, however, cannot be done without a change in the existing law governing the sale of public property; and if this is done, it is considered important that it should be so changed as to prohibit the private sale of a vessel or other naval property under any circumstances for less than its appraised value. Ships and other property have, in some instances, been privately sold for less than this value, and, therefore, for less than the actual worth was ascertained to be; and this practice ought neither to be recognized nor tolerated by law. If private sales were prohibited and the appraisement and price received required to be reported to the Secretary of the Treasury and by him to Congress, a sufficient check could be placed upon the operations of the Navy Department to establish its responsibility for the sums received and for their proper disbursement. They could by this means be applied to the improvement of the remaining ships, and the Treasury, to that extent, be relieved.

But the relation the Navy sustains to our foreign commerce is not the only aspect in which it is necessary to consider it; for although it is true that we shall not attack any foreign power, and no foreign power is likely to attack us, either on land or sea, yet the nation is unwise which does not provide for possibilities in its future history. Howsoever peaceful a nation shall be, it should not altogether ignore the idea that some time or other it may be forced to engage in war.

The present condition of the Navy, relatively to other powers, has less

aggressive force than at any time during the past third of a century, except during the war, or less power to inflict serious injury upon the commerce of an enemy. Indeed, the fact cannot be concealed, and ought not to be, for it is well known to other nations, that third and even fourth rate powers, almost without exception, are superior to us in this respect.

For some years past large sums have been expended in refitting a number of vessels of the class known as "monitors." Perhaps, under the particular conditions and our uncertain relations with another power, rebuilding them was not unwise, inasmuch as on our immediate coast, and within and adjacent to the Gulf of Mexico, they could be effectively employed in connection with other vessels, and for purposes it is not now pertinent to discuss. Apart from these monitors and a considerable amount of material for construction now on hand, we have but little to show, comparatively, for these large expenditures.

Three of the recently constructed vessels were of iron and uncased, a construction for many years discarded for cogent reasons. The other vessels recently constructed have, in general, fair models and ordinary speed, and will compare advantageously in rigidity, speed, and some other essential qualities, with those of the same class now constructed by the great naval powers. However little the government may desire to vie with the European nations in expensive naval construction, on account of its isolated position and the nature of our peaceful pursuits, it would seem that the Navy, whether regarded as the support of commerce or the means of national defense, should not be kept in its present condition of inferiority. The least that should be done is that already suggested, to put the ships we have in as perfect condition as they are susceptible of, and gradually hereafter, when the revenues shall be sufficient to justify it, build other ships, of such classes and styles of construction as our own and the experience of other nations shall warrant. Otherwise, great national interests may be endangered and humiliation brought upon us, even by inferior powers, in the event that any of them should be disposed to take advantage of our unprepared condition.

This department has not ventured to propose an expensive, and what would, in all probability, prove an ineffective attempt to copy after, or to design and build, these costly vessels, which in commission are enormously expensive, and, whether in service or laid up, undergo rapid deterioration. It nas supposed that its duty would be discharged if it were permitted, as heretofore suggested, to put the vessels now owned in the best condition of which they are susceptible, so that by increasing the strength of our naval squadrons, and thereby giving protection to our commerce, we may hereafter be in a condition to enlarge the Navy to such extent as our national necessities shall require. Whenever the condition of the Treasury will justify appropriations for the purpose, it is supposed that, instead of the large and expensive ships which the European powers are now building, our necessities may be, in a great measure, if not entirely, met by well-constructed vessels, well-designed

and swift marine rams, and improved torpedo-boats, endowed with such qualities and built in such numbers, at comparatively small cost, as our existing necessities may demand. Experiments in these are suggesting their great value as the means of aggressive warfare, and there is fair promise that they will, in the course of time, supersede the expensive naval architecture which so enormously swells the cost of some of the largest ships. Heavy armor-plated, gun-bearing vessels are not capable of sea-service. They are suited for but little else than harbor defense, and may be likened to movable fortifications. And if it shall result that the use of them shall be dispensed with to make place for improved ships, rams, and torpedo vessels, then the Navy can become sufficiently effective if supplied with fast-sailing and fast-steaming vessels of different classes, built, as they are now built elsewhere, to serve in time of peace as schools of instruction for our seamen, and in time of war to destroy the commerce of an enemy. Until these experiments are fully made it would be an improvident expenditure of public money to build large and expensive ships, or to go far beyond putting our present naval force in the best condition of which it is susceptible. Whenever Congress shall deem it expedient to direct such tests as shall develop the importance and value of these modes of construction, beyond those now within reach of the department, no efforts will be spared to make them as effective as possible.

ESTIMATES AND EXPENDITURES.

The amount of appropriations applicable to the current expenses for the fiscal year ending June 30, 1877, were $14,488,974.33. The actual expenses during that period were $14,074,113.27. This, however, does not include the amount due to the officers and men of the Navy for the months of April, May, and June of that year, or the other items of the amount appropriated in the deficiency bill passed at the recent extra session of Congress, viz, $2,003,861.27. This, added to the aforesaid sum expended, will make $16,077,974.54 chargeable to the expenditures of that year. As will appear elsewhere in this report, there are claims against the department, chargeable also to that year. These are submitted to Congress; and whatsoever amount is appropriated therefor, added to the foregoing, will show the total current and other expenses of the year. Of the unexpended balance on hand June 30, 1877, there remains $271,792.83 which stand to the credit of the Bureaus of Equipment and Recruiting, of Yards and Docks, of Ordnance, and of Navigation.

The appropriations available for the present fiscal year, commencing July 1, 1877, are $13,592,932.90. The whole amount drawn from the Treasury from July 1 to November 1, 1877, is $5,343,037.40. Of this amount there is estimated to have been in the hands of paymasters and agents of the government on November 1, 1877, $876,953.53, besides $152,574.77 refunded, making a total of $1,029,528.30, which, deducted

from the amount drawn, will show the actual expenditure from July 1 to November 1, 1877, to have been $4,313,509.10.

The following statement will show the amount drawn and the amount chargeable to expenditure for each of the months since July 1, 1876:

Exhibit of expenditure chargeable to Navy appropriations.

Date.	Drawn.	Refunded.	Expended.
Appropriations for 1876–'77.			
1876.			
July	$2,438,048 84	$3,260 50	$2,434,788 34
August	1,661,681 14	20,425 43	1,641,255 71
September	2,304,514 52	25,128 75	2,279,385 77
October	1,475,512 69	111,789 26	1,363,723 43
November	1,410,557 90	18,794 59	1,391,763 31
December	1,262,050 66	63,836 33	1,198,214 33
1877.			
January	1,363,814 13	574,916 94	788,897 19
February	1,050,991 73	281,546 42	769,445 31
March	1,215,548 86	80,756 77	1,134,792 09
April	433,279 93	112,697 00	320,582 93
May	385,903 40	39,158 04	346,745 36
June	431,762 18	27,242 68	404,519 50
	15,433,665 98	1,359,552 71	14,074,113 27
Appropriations for 1877–'78.			
1877.			
July	1,584,059 44	6,874 59	1,577,184 85
August	1,022,070 04	13,007 57	1,009,062 47
September	1,344,384 27	17,481 61	1,326,902 66
October	1,392,523 65	115,211 00	1,277,312 65
	5,343,037 40	152,574 77	5,190,462 63

1877.

July 31. Appropriation warrant No. 301, 1878	$13,388,059 90
July 31. Appropriation warrant No. 302, 1878	153,000 00
Naval asylum, Philadelphia, Pa., 1878	51,873 00
	13,592,932 90

NAVY-PENSION FUND.

The following is a statement of the number and yearly amount of pensions on the rolls June 30, 1877, and the amount which was paid during the fiscal year:

	On roll June 30, 1877.	Annual amount of roll.	Amount paid for pensions during fiscal year ended June 30, 1877.
Navy invalids	1,722	$195,748 33	$200,227 13
Navy widows and others	1,717	283,910 00	327,723 40
Total	3,439	479,658 33	527,950 55

The estimates for the present fiscal year are $16,233,234.40, exclusive of $2,314,231, submitted for new buildings, repairs, and improvements at the several navy-yards, as will appear by the following table:

Estimates.	
Pay of the Navy	$7,350,000 00
Pay of civil establishment in navy-yards	239,734 50
Ordnance and Torpedo Corps	633,386 00
Coal, hemp, and equipment	1,000,000 00
Navigation and navigation supplies	126,000 00
Hydrographic work	60,300 00
Naval Observatory, Nautical Almanac, &c	61,500 00
Repairs and preservation of vessels	2,250,000 00
Steam-machinery, tools, &c	1,000,000 00
Provisions and clothing, and small stores	1,330,660 00
Repairs of hospitals and laboratories	51,200 00
Surgeons' necessaries and naval-hospital funds	148,000 00
Contingent expenses of department and bureaus	279,000 00
Naval Academy	192,444 40
Support of Marine Corps	871,970 50
Naval asylum, Philadelphia, Pa	64,434 00
Maintenance of yards and docks	574,605 00
	16,233,234 40
To which may be added amount estimated and submitted for new buildings, repairs, and improvements for navy-yards and stations	2,314,231 00
Total	18,547,465 40

It is supposed that the appropriations for the present fiscal year were not designed by Congress to be applied to the construction of ships other than those in progress and contemplated at the time these appropriations were made. With this understanding, the department has felt itself bound only to proceed with the construction of the Nipsic, at Washington, and the Galena, at Norfolk, both of which were in such condition that any further delay would impair their value and increase the cost of their final completion. It is hoped that the Nipsic will be finished and ready for sea within this fiscal year, and the Galena within three months thereafter. It is not contemplated to enter upon the building of any new ships within the year, or to proceed with the Mohican unless Congress shall direct it. The appropriations of the present fiscal year, therefore, will be applied to the ordinary expenses of the service and to such repairs of vessels as are rendered absolutely necessary. As to the latter, it is often impossible to estimate them until after the work of repairing has been begun. The removal of decayed timber which is visible, and which creates the necessity for repairs before it is safe to send a ship to sea, sometimes exposes other decayed parts which were not visible, and which necessarily increase the cost of the work. And it has sometimes happened, and may so do again, that when the exposed timbers are removed and latent defects seen for the first time, the entire stripping of a ship becomes necessary to put it into a

safe and reliable condition. The loss of a ship and its whole crew might be the consequence of sending it to sea without being in this condition.

PAY OF THE NAVY.

Referring to my report laid before Congress at the late extra session, I desire to repeat that the deficiency then existing in this fund has been a continuing one, and is not chargeable to any particular year. It is difficult to arrive at its precise condition at the end of any one of the past years; nor is it now considered material to do so, in view of the fact that whatever of deficiency has existed in the past runs forward and enters into the present ascertained balances. For the purpose, however, of enabling Congress to understand its condition fully, I have caused to be prepared the accompanying table, showing the condition of the fund from 1803 to 1877. In explanation of this table, it is proper to say that it is designed to show the sums annually appropriated, and the distribution among the disbursing-officers, whose accounts are rendered to the Fourth Auditor and settled by that officer and the Second Comptroller. These settlements have been made up to June 30, 1877, and show that the money has been faithfully disbursed and accounted for, except the ascertained defalcations, which have been reported to the proper department for judicial proceedings. The table, however, does not show the deficiency of the fund, inasmuch as it is designed, of necessity, to be in the nature of a bank-account, showing merely the aggregate debits and credits of the fund and not the balances due by or to it at any particular time. The deficiency can only be ascertained by the books of the Fourth Auditor's Office, and the accounts of the disbursing-officers filed there, which alone show the amounts actually due and unpaid. Therefore, the amount recommended to and appropriated by Congress at the late extra session was arrived at in this mode, as this department had no other method of ascertaining it.

In order to remove, as far as possible, the difficulties and inconveniences which have existed in reference to this fund, so that hereafter Congress may more easily and correctly ascertain its amount from time to time, I have requested the Treasury Department to open a separate account of the disbursement of the amount appropriated by the act of November 21, 1877, in order to prevent it from being mingled with the general appropriation for pay of the Navy. If it were so placed as to become a part of this general fund it would hereafter be impossible to ascertain, without very great labor, whether the estimated deficiency reported to the extra session of Congress was or was not correct; whereas, by the proposed method of keeping the account, both the Treasury and Navy Departments will be, at any time, enabled to ascertain the precise amount to which this appropriation is applicable. And if, by this means, it shall be ascertained that the amount is less than that required to pay all the officers and men for the last quarter of the last fiscal year, the fact will be known; and if it shall be in excess of

that amount, the surplus can be turned into the general appropriation for pay of the Navy. Apart from this, it will relieve the specific fund from all such embarrassment that each year's appropriation will be expended as designated by law; and if Congress shall authorize the Treasury Department to open such an account as will enable the Secretary of the Navy to draw upon a general fund for all purposes connected with the ocean service other than pay of the Navy, it is believed that this practice may hereafter relieve the latter fund from depletion, so that it will be at all times easy to ascertain its precise condition. The practice of permitting all expenses of vessels abroad, of whatever kind, to be paid out of pay of the Navy, and awaiting the settlement of paymasters' accounts in the Treasury Department before the amounts necessary to restore the fund to its proper condition can be transferred from the funds appropriated to the several bureaus, may have resulted from unavoidable necessity. But, whether this is so or not, it is desirable that it shall be changed, and the plan I have suggested be adopted, as not only due to the officers and men of the Navy, but because it will furnish a more satisfactory method of keeping the separate accounts and of complying more fully with the law.

In the report of the Secretary of the Navy of November 29, 1877, the estimated amount for pay of the Navy for the present fiscal year was $7,300,000, the computation being based upon the number of officers and men then borne upon the register. Congress, however, by the act of March 3, 1877, appropriated only $6,600,000, or $700,000 less than the estimate. This will necessarily produce a deficiency at the end of the fiscal year unless Congress shall appropriate the above amount, the payment of which to the officers and men is so fixed by law that it cannot be evaded. The amount appropriated for deficiency at the extra session of Congress had reference only to the last fiscal year ending June 30, 1877, and was based upon the amount ascertained to be due upon the books of the Fourth Auditor's office, whereas the deficiency here referred to is estimated for the present fiscal year, ending June 30, 1878.

NAVAL ACADEMY.

The department takes great pleasure in expressing its high appreciation of this admirable institution, not only on account of the educational advantages it offers, but because of the care and diligence displayed in its management by the officers in whose charge it is placed. The country looks to it for the future supply of its naval officers, and the excellent methods of study and discipline adopted give assurance that there will be found among the cadets many of eminent fitness. The whole corps of officers in charge of the institution are, in every sense, competent to discharge their duties. The graduating class at the June examination, consisting of 43, exhibited gratifying proficiency in all their professional studies, and its members are now serving their terms of two years at sea, as cadet-midshipmen, preparatory to taking the rank

of midshipman in the Navy. From the accompanying report of the board of visitors for the last year it will appear that they speak in the most commendatory terms of the institution, and present several important recommendations, which are entitled to the consideration of Congress. There are now in attendance 276 cadets. Of these, there are 213 cadet-midshipmen and 63 cadet-engineers.

NAVAL CONSTRUCTORS.

One disadvantage under which the government has labored in building ships has been occasioned by its neglect to educate its ship builders. Instead of preparing its own officers for this purpose by proper professional training, which could have been done at comparatively small cost, it has had to rely mainly upon those who could be withdrawn from the merchant service. The evil is diminishing somewhat, and it is hoped that it will, in the course of time, be entirely removed. The subject is one of the greatest importance, and has received so much attention from the English Government that several of its eminent naval constructors have been knighted for their services. In France, none are permitted to enter this corps who have not been pupils in the first class of the polytechnic school. These, as well as other governments, have realized the positive necessity of educating these officers at the public expense; and their experience, no less than our own, has proved that ships of war cannot be safely or economically constructed by those who have not been professionally educated for that purpose. An improperly designed ship may compromise the honor of the country. No skill or intrepidity of the officers and men can remedy a serious defect in construction, and when it exists the total loss of a ship may be the unavoidable consequence.

It is believed that we would soon be supplied with a sufficient number of competent Naval constructors by selecting them from the young men who enter the naval Academy and show an aptness or predeliction for mathematical and mechanical studies. There are many who enter there whose natural taste lies in this direction, and to whom such studies would be more attractive than those purely nautical. They enter the Navy for life, and have to be provided for by the government. If, therefore, a certain number of cadet-midshipmen, willing or desirous of entering the corps of naval constructors, and most proficient in the studies before named, should pursue, for two years at least, a course of study exclusively devoted to the object to be attained, that is, to mathematics and their application to mechanics, descriptive geometry, drawing, with kindred subjects connected with their future profession, a corps of naval architects, fully competent for planning and constructing the best ships, would, in a few years, be supplied. The time now devoted to gunnery, astronomy, and other studies necessary to officers who go to sea, could be engaged in developing their mathematical and mechanical talents. The application of mathematics to the stability of floating

bodies, and the other general theoretical principles, can be perfectly taught by the professors of the academy; and, this foundation being laid, the intelligent student can readily pursue them in the channels that will gradually open before him.

From the Academy the cadet should be sent to a navy-yard, where, under the further tuition of an experienced naval constructor, his progress would be continued. After becoming familiar with the practical operations of the yard, and with the use of materials and tools, he would be prepared to become a constructor.

By means of such a system of professional training as this, it is believed that the law which now authorizes the appointment of assistant constructors from the cadets of the Naval Academy would be attended with practically beneficial results. As it now is, such selections are necessarily made from among those who are educated specially for sea-service and steam-engineering; whereas the plan suggested requires the method of professional education to have reference to the object to be attained—the construction and building of ships. This important subject is recommended to the consideration of Congress, and is deemed worthy of its serious consideration. These suggestions can be readily elaborated into a practical plan.

NAVY-YARDS.

The estimates for the several navy-yards cover such amounts only as are supposed to be absolutely indispensable to keeping them in good condition. Repairs to docks and buildings become necessary more or less each year, and it is believed that the sums asked for are the least demanded by these and other uses indicated in the schedule of estimates. So much money has already been expended at these yards, and so essential are they to the maintenance of the Navy, that it would be bad economy to permit them to go into decay and the large amount of property accumulated in them to be wasted.

KITTERY YARD.—No new improvements have been made during the last fiscal year. The appropriations for repairs and preservation were barely sufficient, with the practice of rigid economy, to make such repairs as were most urgent.

The excellence of the machinery and workshops at this yard; the abundance of skilled labor in its immediate vicinity; the healthfulness of its climate, which has caused it to be selected as the port to which vessels of war suffering from the pernicious climate of the West Indies and Mexico shall be ordered for sanitary purposes or for repairs, all conspire to recommend it to the fostering care of Congress. The amount of appropriations asked for is small, and is urgently needed.

BOSTON YARD.—No new works have been erected at this yard within the year. An appropriation for building a boundary wall on the southwest side of the yard, for the protection of the large amount of public property stored in its vicinity, is asked for. The new floor for the rope-

walk is a necessity, and the cart-shed, yards and docks' workshop, the paving, grading, and railway tracks are much needed. The rope-walk at this yard is the only Government rope-walk in the country; and the excellence of its hemp, manilla, and wire rope and hawsers is universally acknowledged. This yard is a very important one. It contains a large quantity of the best machinery, and possesses one of the three stone dry-docks on the Eastern coast.

NEW YORK YARD.—No new works have been erected during the year. The small allotment it was possible to make from repairs and preservation has been economically and judiciously applied, and the yard is in as good repair as could be expected, under the conditions of inadequate appropriations.

Upon my visit to this yard I was disagreeably surprised at the dilapidated state of that valuable piece of property known as Cob-dock. This dock has been reclaimed from its original condition of a mud-bank, by the zeal and energy of naval officers and seamen. It is now second only in importance to the navy-yard itself; and if something be not speedily done to arrest its decay it will gradually but surely slide back to its original condition, encumber the channel with its acres of mud, and the work of years will be entirely lost to the government. It is hoped that Congress will see the present urgent necessity of saving this reclaimed land, and of rendering it of greater value to the country. The estimates for improvements at this yard are small, and the timber and coal sheds, the crib-work and fire-engine house are objects of prime necessity.

By the act of February 26, 1877, (16 U. S. Stat. at Large, p. 239, chap. 66,) the President was authorized to organize a commission of three members, who were required to arrange equitable terms for the conveyance to the city of Brooklyn of a portion of this yard, situate in Wallabout Bay, for a public market. By the act it was provided that when the commission, or a majority of its members, shall report their conclusions to the Secretary of the Navy, it shall be his duty to lay them before Congress, at its first session thereafter, and shall make and deliver to the city of Brooklyn a sufficient deed of conveyance for the land described in the act, or such part as the commissioners may recommend for sale. This commission has been organized, but has thus far made no report; in view of which fact I deem it my duty to say that, from a personal inspection of the premises, I have reached the conclusion that this important navy-yard would be very seriously injured by this sale. If it is to be preserved in such condition as will answer the public demands at this important point, its territorial limits should not be reduced. In the near future every available foot of ground within its walls will be needed for wet-docks, workshops, timber-sheds, and other public buildings.

It is not supposed that Congress intended the act referred to as an absolute sale, and that the deed of conveyance should be made upon the

report of the commission without further inquiry. In that event the conveyance would be a matter of form merely. But, if it be otherwise, and Congress still retains full power over the matter, it may yet, in its discretion, decide whether or no the property shall be sold. The subject is worthy of consideration.

NEW LONDON YARD.—Little beyond grading a portion of the site granted by the State of Connecticut to the Navy Department has been done at this yard during the past year. The large wharf, built some time ago, and the storehouses are in good condition. As it has not yet been finally determined by Congress whether the site shall be retained by the government for the purposes designed by the conveyance from the State, and as no appropriation was made for the present fiscal year, it was not deemed expedient to embrace any in the estimates for the next year.

The land conveyed to the government is situated upon the bank of the Thames River, contains eighty-three acres, and has a mile of available water-front. A board of competent naval officers reported, in 1862, that the harbor has a safe and reliable entrance from the ocean, and is accessible at all times and seasons. It is well protected from violent winds and heavy seas, and is not obstructed by ice. As a strategic point it is of great importance to the defense of the city of New York, the commerce of Long Island, and the whole coast of Connecticut. Batteries or monitors could easily prevent an enemy from penetrating the harbor. It is, in fact, so well adapted to all the purposes of a navy yard, that its claims for continued appropriations are worthy the consideration of Congress.

LEAGUE ISLAND YARD.—The sum of $402,417.41, allotted to the Bureau of Yards and Docks during the last fiscal year, out of the sum realized from the sale of the Philadelphia navy-yard, has all been expended in the erection of buildings, wharves, and causeways, and in grading and filling in. All the principal work has been done by contract. The remainder of the $1,000,000, to wit, $597,582.59, was expended by the Bureaus of Steam-Engineering and Construction and Repair for purposes pertaining to those bureaus.

The appropriations for this yard are specially recommended to the consideration of Congress. League Island, from its geographical proximity to the iron and coal fields of Pennsylvania, from its situation in the immediate vicinity of Philadelphia, whence labor, skilled in all the mechanic arts, can be drawn, must eventually become one of the most important navy-yards in the country. Entirely secure from attack by an enemy, it will become important to collect at this yard stores of material which, in the event of a foreign war, it might be deemed unsafe to stock at yards more exposed to bombardment. And establishments should be erected here whenever the condition of the Treasury will warrant it, with all the machinery and appurtenances for manufacturing all the various articles which go to make up a vessel of war.

WASHINGTON YARD.—No appropriation for improvements was made for this yard for the last fiscal year. The importance of it, however, cannot be lost sight of. Although small, it is thoroughly equipped and in good condition. Every effort has been made to keep the workshops in a good state of repair; but during the fiscal year ending June 30, 1876, by special act of Congress, no part of the appropriation for repair and preservation was allowed to be used for that purpose, and consequently large repairs are now needed.

This yard possesses a large quantity of the best machinery. It is here that all the copper for the Navy is rolled, and that chains and anchors are made. As a manufacturing yard it has not its equal in the country. No estimate for new buildings has been made, and it is hoped that the whole sum asked for under repairs and preservation will be granted.

NORFOLK YARD.—No new works were undertaken at this yard during the last year. The limited amount of accommodation for the storage and protection of timber is a source of great loss and inconvenience. Estimates have been made for two timber-sheds, and these will only partially remedy the evil. A chain and cordage store for the Bureau of Equipment and an engine-house are much needed; and $20,000 for the extension of the quay-wall, an improvement of great importance, have also been estimated for, and an appropriation for each object is recommended.

The site of this yard was selected many years ago, by competent and far-seeing naval officers, and has proved to be all anticipated by them. Work can be carried on there at all seasons of the year, and it may be said to be inaccessible to an enemy. Skilled labor is procured there without difficulty and to any extent required. Taking all these and other conditions into account, Norfolk cannot fail to be one of the most important naval stations if properly fostered by Congress.

The propriety of constructing a fresh-water basin in which iron-clad vessels may be laid up, protected from the corroding influences of salt water, and kept ready to move at the shortest notice, has for some time been under the consideration of the department. In September last a board of experienced civil engineers was ordered to Norfolk navy-yard, for the purpose of selecting a site, in the immediate vicinity of the yard, where such a basin as was deemed necessary could be constructed, in the event of its sanction by Congress. The department, in selecting this point for such a basin, was governed by its knowledge of the existence of fresh-water streams in that vicinity, by the central position of the yard, and by its temperate climate. The report of the board, together with a plan of the proposed basin and site, with estimates of the probable cost, is herewith laid before Congress for its consideration.

PENSACOLA YARD.—No appropriations were made for new improvements at this yard during the last fiscal year. The yard is reported to be in a fair state of repair. It is now the only point south of Norfolk where repairs can be made to a vessel of war. But the means at com-

mand are very limited. A machine-shop for steam-engineering has been estimated for, and also a timber-shed. Both these are objects of imperative necessity.

In the possible event of hostilities in the Gulf of Mexico, the Pensacola navy-yard would become of the first importance. All the Gulf squadron would necessarily resort there for repairs. There is no good reason why it should not become, in the future, a building as well as a repairing yard. Its proximity to the live-oak reservations would render that costly material cheaper there than at the more northern yards, as the long water carriage would be avoided; and it has the excellent iron and coal of Southern Alabama almost at its gates.

An iron dry-dock, already contracted for, is in progress of construction, and is designed for this yard. It is the intention of the department to have it towed to the yard as soon as the proper season for doing so shall arrive and it can be safely attempted.

It is represented to the department that apprehensions are entertained by the citizens of Pensacola that the navigation of the bay may be seriously if not irreparably injured by the injudicious unloading ballast from ships upon blocks or cribs sunk in deep water to receive it. These structures are temporary in their nature, but they leave large deposits, whereby the depth of the water in the bay is diminished, thus interfering with the approach of shipping to the shore. Their tendency is to change the currents by the creation of artificial islands, and to throw the sand from points of the land into the deeper waters of the bay. Not only is se ious injury thereby threatened to the commerce of the port, but the entry of national vessels into the harbor endangered. In view of this fact it is well worthy the consideration of Congress.

MARE ISLAND YARD.—The only new work in progress at this yard is the stone dry-dock. For the past fiscal year $50,000 was appropriated, and has been expended chiefly for taking care of the work already completed, and in laying masonry. In the present unfinished condition of the dock, it is peculiarly liable to injury from a variety of causes, but no appropriation for continuing the work was made for the present fiscal year. The dock has, consequently, been cared for from the small appropriations made for the Bureau of Yards and Docks. An appropriation of $400,000 for the purpose of continuing this important and necessary improvement, to be made immediately available, is recommended.

I cannot too strongly urge the necessity of this appropriation; and desire also to call special attention to the estimate for dredging and scowing. For maintaining a proper depth of water in the vicinity of the wharves and at the landings, dredging is indispensable.

Reports from the late commandant at Mare Island show a great decrease in the depth of water at the docks, and unless some radical measures are promptly adopted, it will soon be impracticable to bring a vessel of even moderate draught of water alongside the dock. I consider all the objects estimated for necessary and economical. As the only navy-

yard upon the Pacific coast, it is unnecessary to dilate upon the great value of that at Mare Island. Situated, as it is, behind the defenses of San Francisco—having that growing and important city to draw upon for skilled labor and material of all kinds—and being the only port at which our vessels of war from the North and South Pacific can be properly repaired, its importance cannot be overestimated.

TORPEDOES.

The long list of casualties during the late war, as well as many failures, have stimulated invention in devising improved methods of attack and defense. In 1869 a torpedo school was established at Newport, and upwards of 170 officers of all grades, from captain to ensign, have attended the practical exercises and instruction in chemistry and electricity. A very complete course of the chemistry of explosives, and of electricity as applied to signalling and lighting, and to exploding subaqueous mines by contact, automatically or at the will of the operator, has been established. The experience of the war and suggestions of numerous officers have been embodied, and the subject is well advanced, so far as defense is concerned, either of ships from attack or of harbors or passes.

The importance of these experiments is demonstrated by the fact that electric signals from a cordon round a vessel, or moored in channels, denote an approaching adversary, and indicate his movements even in fogs or darkness. They, moreover, enable an operator to fire guns laid in advance, or explode at will any torpedo within the radius of whose destructive effect the enemy may pass, while the electric light renders his movements visible.

The offensive modes of indirect attack have not made so much progress, being confined thus far to direct methods of attack with small vessels or launches, partaking of the nature of a forlorn hope, and with little chance of success against a watchful enemy provided with suitable means of discovery and defense. These offensive torpedoes are the "outrigger," devised by Fulton; the towing-torpedo; the self-contained locomotive-torpedo, such as the small cigar-shaped boats used during the war, and those launched from a ship or boat, trusting to accuracy of direction; and, finally, the controlling torpedoes of Lay and Ericsson, and those improvised from the ship's ordinary steam-launches fitted with electric cables for steering; these, for the present, are the most effective methods of attack. And it is believed that the experiments now in progress in reference to these will result in most important improvements.

With our limited number of ships and great extent of coast the development of this subject is of the highest importance, as we offer numerous vulnerable points in our deep bays and broad sounds, which cannot be closed to an enterprising enemy by any system of fortifications or subaqueous mines operated from the shore. Suitable armored torpedo-

boats will be necessary adjuncts to our monitors and other systems of defense. But the whole subject is yet in such an inchoate state that extensive experiments will be necessary to determine the best methods and familiarize officers and men with their use. These experiments are comparatively inexpensive, and since it is only by practice that skill and confidence in the use of the powerful explosives can be obtained, I recommend the appropriations asked for the bureau having charge of this important and interesting subject.

TRAINING SYSTEM.

Under section 1418 of the Revised Statutes, boys between sixteen and eighteen years of age are authorized to be enlisted in the Navy to serve until twenty-one years of age. With a view to secure practically the good effects of this provision, the department has had in operation for two years a training system for the purpose of introducing a class of well-trained young seamen into the Navy to take the place of the old men-of-wars-men, who are fast disappearing, as well as gradually to man our ships of war with American citizens who appreciate their relations to the government, and will be always ready to defend its honor and its flag. By this mode we shall be enabled to give to our naval service a more distinctive national character, such as it has hitherto very much lacked, in so far as the enlisted men are concerned. At present there are 458 of these boys under training, and 324 have passed out of the training-ships into the general service. The English government has availed itself of this method of training its seamen, and its navy has derived material benefits from it. Already the system has worked so satisfactorily in our Navy that it is very desirable it should receive whatever advantages can be given it by additional legislation. As the Navy has been reduced by act of Congress to the low standard of 7,500 men, if Congress should empower the department to enlist 750 boys annually, in addition to the present allowance of enlisted men, for the foregoing purpose, the beneficial effects of it would soon be manifest. This number annually enlisted will eventually man the Navy, keep it supplied with seamen in time of peace, and form the nucleus of a larger force should it become necessary, in time of war. The annual cost of this number of boys would not exceed $90,000, chargeable to the pay of the Navy, a cost comparatively nominal in view of the advantages which would inure to the service and the country from this system of training.

BANKING SYSTEM.

A law of Congress, approved May 15, 1872, established a system of deposits in the Army for the savings of the soldiers. It authorizes the payment of 4 per cent interest upon all sums of $50 and upward deposited with any paymaster in the Army, under certain restrictions and subject to certain conditions. I respectfully suggest to Congress the necessity of so extending the operations of this law as to include

the appointed and enlisted men and boys and marines of the Navy. The operation of the law, as reported by the Secretary of War, has been of the most beneficent character, reducing desertion, and improving the tone and morale of the Army. A similar law is also in force in the British army and navy, with like gratifying results. The payment of this interest would probably not require more than $25,000 annually.

HYDROGRAPHIC OFFICE.

During the last fiscal year the work of the hydrographic office has progressed steadily and satisfactorily. And, although much yet remains to be done to place this important branch of the Bureau of Navigation in a position to supply all the demands of the naval and commercial marine, it is able at present to furnish the greater part of the charts, sailing-directions, &c., required for commerce. This office has a most favorable position with regard to similar offices abroad, and is relied on almost entirely by those connected with our own commerce. For the work done during the year, with the recommendations made for the future, I refer to the report of the chief of the Bureau of Navigation and that of the hydrographer.

NAVAL OBSERVATORY.

This institution continues to deserve the highest consideration of the country and of the scientific world on account of its steady progress in all the branches intrusted to its care. Under the management of its able corps of professors, it has already taken rank among the most distinguished observatories in the world, and promises such future usefulness as commends it to the approbation and fostering care of Congress.

The location of the observatory exposes it to unhealthy influences, the effects of which have already been witnessed in the impaired health of its occupants. It is very desirable that it should be changed to some more suitable point, which may be more economically done while the buildings are becoming dilapidated, than at some future period after the money necessary to put them in a good state of repair has been expended.

It has been supposed that it would be advantageous to change the plan of its management, by removing it from the control of the Navy Department and establishing it as a National Observatory, under an independent organization. I have conferred upon this subject with the present superintendent and the corps of professors, and communicate herewith their opinions. While they are not all united as to the propriety and expediency of this suggestion, a majority think that the public interests require that the change should not be made. In this opinion I concur, believing that, for the present at least, it would be unwise to disturb it.

VOLUNTEER ASSISTANT SURGEONS.

The medical corps of the Navy consists of 15 medical directors, 15 medical inspectors, 50 surgeons, and 100 assistant surgeons, as fixed by

law. Section 1411 of the Revised Statutes gave to the Secretary of the Navy power to appoint, for temporary service, such acting assistant surgeons as the exigencies of the service may require. Under this act a number of appointments have been made from time to time, and some of the appointees have been transferred into the regular corps of the Navy. The Navy appropriation act approved July 15, 1870, provided (sec. 13) for the repeal of all laws authorizing the appointment of temporary acting officers in the Navy, except as to these assistant surgeons. As I suppose this act to take away from the Secretary of the Navy the power to dispense with the services of any of these assistant surgeons, and as 22 of them are now in office, whose services are not required, the matter is submitted to Congress, to decide whether or no they shall remain longer in office and be paid for services which are not performed and which are not likely to be required in time of peace.

PURCHASE OF IRON.

Attention is called to the suggestions in the reports from the Bureaus of Steam-Engineering and Equipment and Recruiting in reference to the purchase of iron for boilers, chains, &c. As the law now stands, the department, after publication, is required to award contracts for iron to the lowest responsible bidder. After the contract is thus awarded it has sometimes occurred, and is likely to occur again, that upon subjecting the iron to the necessary government test it is found not to answer the purposes for which it is designed. When this occurs a new contract has to be made, after another publication, which occasions great and sometimes injurious delay, with the possible repetition of the same state of fac s. An instance of the kind recently occurred. The Bureau of Steam-Engineering advertised for proposals for boiler-iron, and specimens were furnished after the award of the contract which, upon actual test, have failed to come up to the requirements. The contract, consequently, has not been entered into, and, unless it is made with the lowest bidder, cannot be without further advertisement. The result is that great delay has ensued, which is without remedy within the authority of the department. And there is no guarantee that the same thing may not be repeated.

The necessity for having the very best iron for boilers and chains must be recognized by all. The use of inferior material for either of these purposes might and probably would be attended with the most serious consequences—either the bursting of a boiler or the parting of a chain. By the former, many lives might be sacrificed and a vessel seriously injured; by the latter, a ship and its crew might be lost at sea.

There can be but one remedy for this condition of things, which is to allow the purchase of iron for naval purposes, whenever it can be obtained, with a view to the peculiar qualities requisite for the purposes for which it is required. The iron-board at the Washington navy-

yard is constantly engaged in testing the iron of any manufacturer who may desire it, and authority should be given to the department to purchase such as has passed the test established in the most satisfactory manner, at its market-value. If it should be the pleasure of Congress to amend the existing law so as to authorize this, such restrictions could be adopted as would secure a satisfactory ascertainment of the market-value and sufficiently guard against imposition. Private purchases of any material for public use should not be authorized, except in cases of absolute necessity. But this seems to constitute such an exception to the rule that it might be adopted without any impairment of the rule itself. It is believed that where so much depends, as it regards life and property, upon the kind of iron used in the Navy, its quality and fitness should not be left dependent upon the private interests of those engaged in its manufacture. Safety and security require the preservation of the government test, and where these cannot be reached by the manufacturer who may become the lowest bidder under an advertisement, the department should be allowed, upon its public responsibility, to procure the material needed, according to the test, wheresoever it can be procured at a fair market-price.

SEAMEN'S CLOTHING.

All enlisted privates in the Army and in the Marine Corps are furnished with clothing, at the time of their enlistment, at the public expense, and without any charge to them. It is otherwise with enlisted seamen. The price of the clothing of each enlisted seaman is charged to him at the date of his enlistment, and the amount necessary to repay the cost to the Government is deducted from his pay, in proportionate monthly amounts. This is considered by them as oppressive, and finding themselves thus brought in debt, it is the frequent cause of desertion. If they were placed upon the same footing with the soldiers and marines their services would be more cheerfully rendered, and the number of desertions would be reduced. This matter is especially recommended to Congress.

INDEBTEDNESS.

On March 1, 1877, the indebtedness of the Bureau of Steam-Engineering to sundry individuals and companies, for balances due upon contracts made before that time

For machinery, boilers, &c., was	$1,454,694 33
For materials, stores, &c., was	206,852 75
Total	1,661,547 08

On March 3, 1877, contracts were made by the department for work on account of the iron-clads Puritan, Monadnock, Terror, and Amphitrite, aggregating $1,165,000, each of which contained a provision that no portion of the money should be paid until appropriated by Congress.

Contracts were also made March 7 and March 10, 1877, for boilers for the Tuscarora, Narragansett, Snowdrop, and Dictator, amounting to

$331,621.09, making a total indebtedness of this bureau March 10, 1877, $3,158,168.77. As there was no money appropriated by Congress subject, by law, to be applied to payments of work done under the contracts made subsequent to March 1, 1877, these contracts were suspended, and the order of suspension has not been revoked.

To the above aggregate of indebtedness should be added, for necessary purchases, &c., from March 1 to July 1, 1877, the sum of $5,747.29, making the total indebtedness of the Bureau of Steam-Engineering to July 1, 1877, $3,163,915.47.

The indebtedness of the Bureau of Construction and Repair, as ascertained up to March 1, 1877, was, upon bills in requisition of Navy paymasters, $185,680; accrued bills not drawn, $83,558.71; for labor at navy-yards, $27,949.76; and bills held by parties, and available only after an appropriation to meet the same was made by Congress, $547,609.64 Large quantities of timber had been contracted for, part of which had been delivered and another part was to be thereafter delivered. That part to be delivered was contracted for by orders from the bureau, which, having been issued when there was no money on hand to pay the bills and without advertisement and competition, were all suspended. The department, having no reason to believe that the parties who held these orders were acting otherwise than in good faith, and not being disposed to act oppressively toward them, consented that in all cases where they had the timber *in transitu* at the time of the suspension, it might be delivered at the respective navy-yards for storage, with the understanding that the question whether or no the contracts, to that extent, should be recognized or disallowed, should be submitted to Congress. If recognized, and the money appropriated and paid, the timber will become the property of the United States. The whole amount covered by timber already delivered, and that included in these orders, is $287,503.31. There are also other claims against this bureau, arising within the time mentioned, amounting to $303,854.82, of which the department has had notice. The aggregate of all these demands, therefore, is $1,436,156.23, including the price of the timber stored after the suspension of the orders.

There were contracts made by the department, March 3, 1877, for work to be done by this bureau, for the completion and fitting the ironclads Puritan, Monadnock, Amphitrite, and Terror, amounting to $2,103,642. There being at that time no money available in payment of these contracts, a provision was inserted in them that no payments should be made under them until appropriations applicable to the purpose were made by Congress. I deemed it my duty, also, to suspend these contracts, inasmuch as I regarded them as not authorized by law, and to submit to Congress to decide whether they shall be recognized or canceled, and, if these vessels are to be completed, in what manner it shall be done. Finding no present appropriation applicable to that purpose, I do not regard the department as possessing any discetionary

power in reference to them except to see that the interest the government has in them is properly protected. If the amount covered by these contracts is to be charged against the Bureau of Construction and Repair, then the whole amount of its actual and conditional indebtedness will be $3,539,798.23.

A contract was made by the department February 8, 1877, for the impregnation and preservation of timber, for which it was agreed to pay $14,000 for one hundred thousand feet of timber, and beyond that quantity four cents per cubic foot, with further conditions in reference to the execution thereof. This contract was also suspended for the same reason as those referred to above, and is not therefore embraced in the foregoing estimate of indebtedness, as the amount to be paid under it, if executed, is indefinite.

The indebtedness of the Bureau of Provisions and Clothing on March 1, 1877, for bills for provisions, was $55,846.31; for clothing, $385,189.08; for small stores, $28,500; and for freight, $3,935.91; making a total of $473,471.30. It is due to the management of this bureau, however, to say that there was due to it on account of clothing issued and checked against pay of the Navy $339,200.23, and that it was indebted to pay of the Navy, on account of purchases and expenses of store-houses abroad, $225,742.77, for clothing, $3,489.05, and for contingent expenses, $4,548.30, making a total of $233,780.12. So that, in striking the balance between this bureau and pay of the Navy, the latter fund remains in debt to it $105,420.11, for which there has been no transfer. The bureau has also unsettled balances with the other bureaus and the hospital fund, as follows: the other bureaus are indebted to it in the sum of $8,779.80, while it is indebted to them and the hospital fund $4,946.96, leaving $3,832.84 in its favor. If these adjustments were all made between the bureaus it would, therefore, reduce the indebtedness of this bureau to $364,218.35. But as all the money appropriated for the last fiscal year has been expended, and no portion of that appropriated for the present fiscal year is applicable to the adjustment of these balances, the indebtedness of the bureau cannot be relieved in any other way than by the appropriation of the whole amount of $473,471.30 by Congress.

If the sums covered by these suspended contracts be held as chargeable against the Bureaus of Steam-Engineering and of Construction and Repair, the total indebtedness of the three bureaus is $7,083,503.25. If the amounts covered by the conditional contracts with the Bureau of Steam-Engineering and that of Construction and Repair be held as not so chargeable, then the indebtedness will be reduced to $3,483,240.16. And it is proper to say, in reference to these conditional contracts, that the iron-clads they were designed to complete have already cost the government large sums of money, and that it would be bad economy to abandon them in their present condition. It is certainly desirable that they should be finished as speedily and economically as possible;

but the Secretary of the Navy has no authority to do this in the present condition of the appropriations, or without the direction of Congress. If the conditional contracts shall be approved, or new ones authorized, and the necessary appropriations be made, the measures necessary to secure their speedy completion will be adopted. If Congress shall decide to leave them in their present condition, the department will employ all the means it possesses to take care of and preserve them.

The adjustment of all these claims and demands, in such manner as Congress shall direct, will relieve the department from pecuniary embarrassment, and enable all its affairs to be so conducted that the appropriations for the present fiscal year can be applied as directed by law; and every effort will be made to secure such a result during the year that there shall be no deficiency at its end. Whatsoever Congress directs to be done will be accomplished if possible, and whatsoever it does not direct will not be attempted.

Respectfully,

R. W. THOMPSON,
Secretary of the Navy.

To the PRESIDENT.

SUPPLEMENT.

VESSELS OF THE UNITED STATES NAVY.

November 10, 1877.

Name of vessel.	Condition.	Displacement.
1ST RATES.		*Tons.*
Colorado	Receiving-ship, New York	4,700
Franklin	Receiving-ship, Norfolk	5,170
Minnesota	Training-ship, New York	4,700
Niagara	Ordinary, Boston	5,440
Wabash	Receiving-ship, Boston	4,650
2D RATES.		
Connecticut	On the stocks, Boston. (Not worth finishing, being of white oak, and much decayed.)	4,450
Florida	Laid up, New London	4,220
Iowa	Laid up, Boston. (Very rotten, not worth repairing, and should be sold.)	4,000
Tennessee	Flag-ship, Asiatic Station	4,840
Antietam	Store-ship, League Island	4,000
Java	On the stocks, New York. (Not worth finishing, being of white oak, and much decayed.)	4,000
New York	On the stocks, New York	4,070
Pennsylvania	On the stocks, Boston. (Not worth finishing, being of white oak, and much decayed.)	4,000
Susquehanna	Ordinary, New York. (Not worth repairing; should be sold)	3,980
Lancaster	Laid up, Kittery	3,250
Brooklyn	Laid up, New York	3,000
Pensacola	Flag-ship, North Pacific	3,000
Hartford	Flag-ship, South Atlantic	2,900
Richmond	Under repairs, Boston	2,700
Congress	Ordinary, Kittery. (Of white oak, and very rotten; should be sold)	3,050
Worcester	Laid up, Norfolk. (Of white oak, and very rotten; should be sold)	3,050
Trenton	Flag-ship, Europe	3,900
Powhatan	Flag-ship, North Atlantic	3,980
Alaska	Under repairs, New York	2,400
Benicia	Under repairs, Mare Island	2,400
Omaha	Flag-ship, South Pacific	2,400
Plymouth	North Atlantic Station	2,400
Lackawanna	North Pacific Station	2,220
Ticonderoga	Under repairs, Kittery	2,220
Canandaigua	Under repairs, Norfolk	2,130
Monongahela	Asiatic Station	2,100
Shenandoah	Ordinary, New York	2,100
3D RATES.		
Juniata	Laid up, Norfolk	1,900
Ossipee	North Atlantic Station	1,900
Quinnebaug	Building, League Island	1,900
Swatara	North Atlantic Station	1,900
Galena	Building, Norfolk	1,900
Vandalia	European Station	2,080
Marion	do	1,900
Mohican	Building, Mare Island (work on, suspended)	1,900
Iroquois	Laid up, Mare Island	1,575
Wachusett	Under repairs, Boston	1,575
Wyoming	Receiving-ship, Washington	1,560
Tuscarora	Under repairs, Mare Island	1,560
Kearsarge	Asiatic Station; on the way home	1,550
Adams	South Pacific Station	1,375
Alliance	European Station	1,375
Essex	South Atlantic Station	1,375
Enterprise	North Atlantic Station	1,375
Nipsic	Building at Washington	1,375
Ashuelot	Asiatic Station	1,370
Monocacy	do	1,370

Vessels of the United States Navy—Continued.

Name of vessel.	Condition.	Displacement.
		Tons.
Narragansett	Ordinary, Mare Island	1,235
Alert	Asiatic Station	1,020
Huron	North Atlantic Station. (Since wrecked)	1,020
Ranger	Asiatic Station	1,020
Kansas	Ordinary, Kittery. (Very rotten and not worth repairing)	900
Saco	Ordinary, Mare Island. (Very rotten and not worth repairing)	900
Nyack	Ordinary, Mare Island. (Very rotten and not worth repairing)	900
Shawmut	Ordinary, Norfolk. (Very rotten and not worth repairing)	900
Yantic	Ordinary, Washington	900
Michigan	In commission, Lake Erie	685
4TH RATES.		
Frolic	Ordinary, Washington. (This vessel too old and expensive; should be sold.)	1,300
Gettysburg	Special duty, Mediterranean	1,100
Tallapoosa	Despatch vessel	1,270
Palos	Asiatic Station	420
Despatch	Special service, Europe	.....
Rio Bravo	Rio Grande River	.....
SAILING-VESSELS.		
New Hampshire	Port Royal	4,150
New Orleans	On the stocks, Sacket's Harbor. (Not worth finishing, being much decayed.)	4,200
Ohio	Ordinary, Boston	4,250
Vermont	In use, at New York, by Equipment Bureau	4,150
Virginia	On the stocks, Boston. (Ordered to be broken up; work suspended)	4,150
Constellation	Laid up, Annapolis; used as a practice-ship	1,886
Constitution	Training-ship, Philadelphia	2,200
Independence	Receiving-ship, Mare Island	3,270
Sabine	Ordinary, Kittery. (Unfit for further service; should be sold)	2,450
Santee	Gunnery ship, Annapolis	2,430
Savannah	Ordinary, Norfolk; fitted for ordnance store-ship	2,330
Portsmouth	On her way from Mare Island to an Atlantic navy-yard	1,125
Cyane	Ordinary, Mare Island. (Unfit for further service; should be sold)	950
Jamestown	Marine school-ship, San Francisco, under act June 20, 1874	1,150
3D-RATES.		
Saratoga	Training-ship, Hampton Roads	1,025
Saint Louis	Receiving-ship, League Island	830
Saint Mary's	Marine school-ship, New York	1,025
Dale	Instruction ship, Annapolis	675
Pawnee	Used for storing coal, Port Royal	1,650
Guard	Astronomical service, Atlantic Ocean	925
Onward	Store-ship, Callao	704
Relief	Receiving-ship, Washington	468
Supply	Training-ship. (Out of commission at New York)	547
IRON-CLADS.		
Ajax	In commission, Sandy Point, James River, Virginia	2,100
Amphitrite	Building at Wilmington, Del.; work suspended	3,815
Canonicus	At New Orleans, North Atlantic Station	2,100
Camanche	Ordinary, Mare Island	1,875
Catskill	In commission, Sandy Point, James River, Virginia	1,875
Colossus	On the stocks, New York. (White oak, decayed in part, and not worth finishing.)	.....
Dictator	Ordinary, League Island	4,500
Jason	do	1,875
Lehigh	In commission, Sandy Point, James River, Virginia	1,875
Mahopac	In dock, Norfolk, repairing	2,100
Manhattan	Waiting repairs, Norfolk	2,100
Massachusetts	On the stocks, Kittery. (White oak, decayed in part, and not worth finishing.)	.....
Miantonomoh	Building at Chester, Pa	3,815
Monadnock	Building at Vallejo, Cal	3,815
Montauk	In commission, Washington Yard	1,875
Nahant	In commission, League Island	1,875
Nantucket	In commission, Annapolis	1,875
Oregon	On the stocks, Boston. (White oak decayed in part, and not worth finishing.)	.....
Passaic	In commission, Washington	1,875
Puritan	Building at Chester; work suspended	.....
Roanoke	At Chester, Del. (Condemned, and ordered to be broken up)	.....
Saugus	In commission, Washington	2,100
Terror	Building at Philadelphia; work suspended	3,815
Wyandotte	In commission, Washington	2,100

Vessels of the United States Navy—Continued.

Name of vessel.	Condition.	Displacement.
TORPEDO-BOATS.		*Tons.*
Intrepid	In commission, New York	1,150
Alarm	In commission, Newport	800
TUGS.		
Blue Light	Laid up, New London; condemned. (Should be sold at auction)	
Catalpa	In running order, New York	
Cohassett	Ordinary, Boston	
Emerald	Ferry-boat, Kittery	
Fortune	In commission	
Glance	In commission, League Island	
Jean Sands	In commission, yard-tug, Norfolk	
Leyden	Repairing, Boston	
Mayflower	At Annapolis	
Monterey	Yard-tug, Mare Island	
Nina	Torpedo duty, Newport	
Phlox	In use, Naval Academy	
Pilgrim	Ordinary, League Island	
Pinta	Attached to North Atlantic Station	
Rescue	Ordinary, Washington	
Rocket	Repairing, New York	
Rose	Yard-tug, Pensacola	
Snowdrop	Yard-tug, Norfolk	
Sorrel	Ordinary, League Island; recommended to be sold	
Speedwell	Ordinary, Kittery	
Standish	Laid up, Norfolk	
Spuyten Duyvil	Laid up, New York	
Triana	Under repairs, Washington	
Wyandank	At Annapolis	
Grapeshot	Yard-tug, New York	
Seaweed	Port Royal	
Burlington	Ferry-boat, ordinary, League Island	

Navy appropriations and expenditures, 1803 *to* 1877.

	Date of act making the appropriation.	Reference to the Statutes at Large. Volume.	Page.	Section.	Amount of annual appropriation.	Year of expenditure.	Expenditure by warrants.	Repayments.	Amount carried to the surplus fund.	Net expenditures.
PAY AND CONTINGENCIES.										
PAY OF THE NAVY.										
Transferred from "Naval Department"					$100,000 00					
For pay and subsistence of officers and pay of seamen	Mar. 2, 1803	2	208	1	183,993 00	1803	$243,993 00		a$40,000 00	$243,993 00
	Jan. 31, 1804	2	249	1	234,328 00	1804	234,328 00			234,328 00
	Jan. 25, 1805	2	310	1	415,578 00	1805	415,578 00			415,578 00
	Apr. 21, 1806	2	398	1	291,119 00	1806	291,119 00			291,119 00
	Jan. 7, 1807	2	411	1	296,048 00					
	Nov. 24, 1807	2	450	1	74,754 29	1807	370,802 29			370,802 29
	Feb. 10, 1808	2	466	1	368,048 00	1808	368,048 00			368,048 00
	Mar. 3, 1809	2	546	2	1,323,077 00	1809	950,000 00			950,000 00
	Mar. 2, 1810	2	562	1	718,115 00	1810	580,000 00		b110,000 00	580,000 00
									c15,000 00	
	Feb. 7, 1811	2	616	1	774,390 00	1811	818,500 00	$4,696 95	b120,000 00	813,803 05
	Feb. 4, 1812	2	685	1	1,123,341 00	1812	1,081,745 20	1,625 25	b200,000 00	1,080,119 95
									c70,000 00	
	Mar. 3, 1813	2	821	1	2,033,000 00	1813	1,727,100 10			1,727,100 10
	Mar. 19, 1814	3	105	1	2,579,341 00					
For bounty and pay of seamen for the year 1814	Apr. 18, 1814	3	139	4	122,700 00	1814	1,808,193 23	252 33	d200,000 00	1,807,940 90
For the pay and subsistence of officers and pay of seamen	Mar. 3, 1815	3	223	1	1,538,364 50	1815	2,538,364 50			2,538,364 50
	Apr. 24, 1816	3	299	1	1,142,015 00	1816	1,142,015 00			1,142,015 00
	Mar. 3, 1817	3	362	1	1,092,732 00	1817	1,092,732 00			1,092,732 00
	Mar. 18, 1818	3	411	1	1,135,595 00	1818	1,135,595 00			1,135,595 00
	Feb. 16, 1819	3	483	1	986,372 75	1819	986,372 75			986,372 75
	Jan. 14, 1820	3	540	1	273,100 00					
	Mar. 17, 1820	3	553	1	989,320 00	1820	1,262,420 00			1,262,420 00
	Mar. 3, 1821	3	634	1	983,325 25	1821	983,325 25			983,325 25
	May 4, 1822	3	676	1	400,000 00	1822	400,000 00			400,000 00
	May 4, 1822	3	676	1	561,466 00	1822	536,690 24	165,389 66		371,300 38
	Mar. 3, 1823	3	763	1	929,503 12	1823	978,635 31	73,980 88		904,654 43
	Apr. 29, 1824	4	20	1	847,142 25	1824	1,101,421 46	203,005 96		898,415 50
Pay and subsistence of officers and pay of seamen other than those at navy-yards, shore-stations, and in ordinary	Feb. 21, 1825	4	83	1	783,554 37	1825	943,373 24	107,320 76		836,052 48
	Mar. 14, 1826	4	140	1	908,595 50					
	Apr. 5, 1826	4	152	1	66,897 00	1826	1,144,473 03	118,504 47		1,025,968 56
	Mar. 2, 1827	4	207	1	1,112,392 25	1827	1,278,973 38	106,355 19		1,172,618 19
	Mar. 19, 1828	4	254	1	1,176,312 00					

For pay, subsistence, and provisions	May 24, 1828	4	313	....	35,160 00	1828	1,370,363 27	150,303 71	.....	1,211,059 56
For pay and subsistence of officers and pay of seamen employed in the Navy afloat	May 24, 1828	4	311	1	294,078 00	.....	.....	.....	.....	.....
For pay and subsistence of officers and pay of seamen other than those at navy-yards, shore-stations, and in ordinary	Mar. 2, 1829	4	354	1	918,514 00	1829	1,297,109 06	137,040 97	.....	1,160,068 09
For pay and subsistence of officers and pay of seamen of frigate Brandywine	Dec. 29, 1829	4	370	....	36,378 00	.....	.....	.....	.....	.....
	Jan. 30, 1830	4	371	....	136,922 61	.....	.....	.....	.....	.....
For pay and subsistence of officers and pay of seamen	Mar. 11, 1830	4	375	....	1,463,449 00	1830	1,381,086 53	254,608 90	.....	1,126,477 63
	Mar. 2, 1831	4	460	1	1,278,694 00	1831	1,649,133 58	145,242 63	.....	1,503,890 95
	Feb. 24, 1832	4	498	....	1,409,927 00	1832	1,448,157 68	114,104 35	.....	1,334,053 35
	Feb. 20, 1833	4	614	1	1,445,000 00	1833	1,435,472 89	86,604 40	.....	1,348,868 49
	Jan. 21, 1834	4	670	....	1,487,244 21	1834	1,698,834 60	91,631 59	.....	1,607,203 01
	Feb. 13, 1835	4	750	....	1,501,824 42	1835	1,464,491 61	88,599 30	.....	1,375,892 31
For additional pay to the officers of the Navy and the civil establishments of the navy-yards, granted by act of the present session of Congress	Mar. 3, 1835	4	770	1	295,732 74	.....	.....	.....	.....	.....
For pay of commissioned, warrant, and petty officers and seamen	May 14, 1836	5	27	1	2,318,017 16	1836	1,841,191 00	52,869 56	e70,000 00	1,788,321 44
	Mar. 3, 1837	5	155	1	2,454,686 00	1837	2,404,045 52	180,239 80	.....	2,223,805 72
	May 31, 1838	5	232	1	1,312,000 00	1838	2,366,706 14	260,617 16	f265,000 00	2,106,088 98
	Mar. 3, 1839	5	362	1	2,352,625 64	1839	2,487,001 46	193,793 97	.....	2,293,207 49
	July 20, 1840	5	398	1	2,250,000 00	1840	2,624,307 31	95,721 49	.....	2,528,585 82
	Mar. 3, 1841	5	419	....	2,335,000 00	1841	2,615,507 92	323,354 91	.....	2,292,153 01
	Aug. 4, 1842	5	500	....	2,335,000 00	1842	2,675,793 27	131,521 39	.....	2,544,271 88
For pay of officers and seamen for half fiscal year	Mar. 3, 1843	5	615	...	1,496,584 50	1843	1,609,865 54	333,224 37	.....	1,276,641 17
For pay of commissioned, warrant, and petty officers and seamen	Mar. 3, 1843	5	615	....	2,715,808 00	1844	3,210,186 94	216,941 30	.....	2,993,245 64
	June 17, 1844	5	699	1	2,509,189 00	1845	2,917,634 93	412,518 63	.....	2,505,116 30
	Mar. 3, 1845	5	790	1	2,509,189 00	1846	2,997,261 07	490,694 06	.....	2,506,567 01
	Aug. 10, 1846	9	97	1	3,571,735 00	1847	2,847,445 40	791,604 93	.....	2,055,840 47
	Mar. 3, 1847	9	169	1	3,305,156 00	1848	4,770,684 06	360,784 11	.....	4,409,899 95
Transferred from Provisions	.....	....	.....	....	48,547 61	.....	.....	.....	.....	.....
Increase, repair, armament, and equipment of the Navy	.....	....	.....	....	235,000 00	.....	.....	.....	.....	.....
Mexican hostilities	.....	....	.....	....	835 43	.....	.....	.....	.....	.....
Navy-yard, Portsmouth, N. H	.....	....	.....	....	44,000 00	.....	.....	.....	.....	.....
Navy-yard, Philadelphia	.....	....	.....	....	42,000 00	.....	.....	.....	.....	.....
Navy-yard, Pensacola	.....	....	.....	....	60,000 00	.....	.....	.....	.....	.....
Surgeons' necessaries, &c., for the sick and hurt, including Marine Corps	.....	....	.....	....	10,000 00	.....	.....	.....	.....	.....
Testing Earle's patent	.....	....	.....	....	5,000 00	.....	.....	.....	.....	.....
Testing inventions for preventing explosions of steam-boilers, &c	.....	....	.....	....	1,000 00	.....	.....	.....	.....	.....
Pay of the Marine Corps	.....	....	.....	....	40,000 00	.....	.....	.....	.....	.....
Fuel for Marine Corps	.....	....	.....	....	10,000 00	.....	.....	.....	.....	.....
Provisions for Marine Corps	.....	....	.....	....	10,000 00	.....	.....	.....	.....	.....
And the following, transferred to the Department of the Interior and retransferred, viz:										
From Invalid Pensions	.....	....	.....	....	36,000 00	.....	.....	.....	.....	.....
Pensions to widows and orphans of persons lost in the schooners Sea Gull and Grampus	.....	....	.....	....	6,189 72	.....	.....	.....	.....	.....

a Transferred to "Naval Department."
b Transferred to "Repairs of vessels."
c Transferred to "Contingent expenses."
d Transferred to "Building sloops of war," &c.
e Transferred to "Provisions," $40,000; "Pay and subsistence of Marine Corps," $30,000.
f Transferred to "Repairs of vessels," $150,000; "Medicines," &c., $10,000; "Contingent expenses," $105,000.

Navy appropriations and expenditures, 1803 *to* 1877—Continued.

	Date of act making the appropriation.	Reference to the Statutes at Large. Volume.	Page.	Section.	Amount of annual appropriation.	Year of expenditure.	Expenditure by warrants.	Repayments.	Amount carried to the surplus fund.	Net expenditures.
PAY AND CONTINGENCIES—Continued.										
PAY OF THE NAVY—Continued.										
For pay of commissioned, warrant, and petty officers and seamen	Aug. 3, 1848	9	266	1	$2, 192, 211 00	1849	$3, 158, 635 88	$379, 872 38	$336, 457 22	$2, 778, 763 50
	Mar. 3, 1849	9	374	1	2, 462, 500 00	1850	3, 096, 208 72	706, 821 94	.....	2, 389, 386 78
	Sept. 28, 1850	9	513	1	2, 758, 262 00	1851	3, 122, 677 70	313, 499 33	.....	2, 809, 178 37
	Mar. 3, 1851	9	621	1	2, 771, 448 00	1852	2, 820, 830 23	263, 427 51	.....	2, 557, 402 72
	Aug. 31, 1852	10	100	1	2, 771, 698 00	1853	3, 309, 369 84	265, 203 26	.....	3, 044, 166 58
	Mar. 3, 1853	10	220	1	2, 880, 148 00	1854	3, 151, 014 77	296, 494 41	.....	2, 854, 520 36
	Aug. 5, 1854	10	583	1	3, 367, 648 00	1855	3, 729, 073 30	334, 110 57	.....	3, 394, 962 73
	Mar. 3, 1855	10	675	1	3, 515, 111 00	1856	4, 046, 783 39	552, 487 56	.....	3, 494, 295 83
	Aug. 16, 1856	11	44	1	3, 421, 718 00	1857	3, 761, 106 14	560, 508 49	.....	3, 200, 597 65
	Mar. 3, 1857	11	243	1	3, 855, 450 00	1858	4, 087, 680 37	558, 800 76	.....	3, 528, 879 61
	June 12, 1858	11	314	1	3, 805, 405 00	.....	.....	.....	.....	.....
For pay of officers, restored to the Navy, during their retirement and suspension	Mar. 3, 1859	11	404	1	62, 394 00	1859	4, 095, 082 96	690, 872 51	.....	3, 404, 210 45
For pay of commissioned, warrant, and petty officers and seamen	Mar. 3, 1859	11	404	1	3, 930, 439 00	.....	.....	.....	.....	.....
	June 22, 1860	12	83	2	39, 400 00	1860	4, 677, 385 36	509, 510 66	.....	4, 167, 874 70
	June 22, 1860	12	80	1	4, 574, 725 97	.....	.....	.....	.....	.....
	Feb. 21, 1861	12	147	1	4, 438, 577 00	1861	6, 081, 538 34	1, 075, 340 51	.....	5, 006, 197 83
	July 18, 1861	12	266	1, 2	7, 179, 200 00	1862	8, 958, 677 80	776, 108 69	.....	8, 182, 569 11
	July 14, 1862	12	561	1	11, 617, 109 00	.....	.....	.....	.....	.....
	Mar. 3, 1863	12	814	1	14, 734, 332 70	1863	13, 353, 128 16	850, 751 14	.....	12, 502, 377 02
	May 21, 1864	13	80	1	19, 423, 241 00	1864	22, 362, 921 64	2, 282, 960 16	.....	20, 079, 961 48
For pay of commissioned, warrant, and petty officers and seamen, including the Engineer Corps of the Navy	Mar. 2, 1865	13	462	1	23, 327, 722 50	1865	29, 831, 792 78	2, 342, 328 02	.....	27, 489, 464 76
	.....	.....	.....	.....	.....	1866	13, 637, 419 49	4, 992, 217 88	a245, 904 13	8, 645, 201 61
For pay of commissioned, warrant, and petty officers and seamen	Apr. 17, 1866	14	33	1	9, 336, 638 00	1867	12, 415, 433 81	3, 392, 042 49	.....	9, 023, 391 32
	Mar. 2, 1867	14	489	....	10, 826, 280 00	1868	11, 996, 787 65	3, 034, 151 91	4, 000, 000 00	8, 962, 635 74
	June 17, 1868	15	68	1	8, 000, 000 00	1869	11, 828, 025 76	3, 298, 457 39	.....	8, 529, 568 37
	Mar. 1, 1869	15	276	1	7, 000, 000 00	1870	8, 069, 616 20	1, 658, 039 30	.....	6, 411, 576 90
For pay of commissioned and warrant officers, for mileage or transportation of officers traveling under orders, and for pay of petty officers and seamen, including men for engineer force	July 15, 1870	16	321	1	7, 000, 000 00	1871	8, 321, 140 75	1, 259, 730 31	.....	7, 061, 410 44
	.....	.....	.....	.....	.....	1872	2, 177, 560 30	855, 418 47	4, 466 91	1, 322, 141 83
For pay of officers at sea, on shore, on special service, on retired list, &c	Mar. 3, 1871	16	526	1	6, 500, 000 00	1872	7, 440, 001 64	1, 087, 784 33	852 53	6, 352, 217 31
	May 23, 1872	17	145	1	6, 250, 000 00	1873	8, 389, 274 45	2, 347, 858 71	.....	6, 041, 415 74
	Mar. 3, 1873	17	547	1	6, 250, 000 00	.....	.....	.....	.....	.....

For pay of the Navy	Dec. 31, 1873	18	2	...	300,000 00	1874	11,747,478 08	4,247,659 68	.....	7,499,818 40
For pay of commissioned and warrant officers at sea, on shore, on special service, &c.	June 6, 1874	18	53	1	6,250,000 00	1875	8,931,258 75	2,485,934 82	.....	6,445,323 93
	Jan. 18, 1875	18	297	1	6,250,000 00	1876	9,393,399 05	3,159,977 94	.....	6,233,421 11
Total	.....	...	.....	...	264,972,664 49	.....	209,517,381 07	50,280,524 31	5,677,680 78	259,936,856 76
Balance	.....	...	.....	...	.....	.....	.....	.....	58,126 95	
For pay of the Navy	June 30, 1876	...	.....	...	5,750,000 00	1877	7,603,452 40	690,545 76	b108,938 07	.....
For pay of the Navy, deficiency	Mar. 3, 1877	...	.....	...	1,000,000 00	.....	.....	.....	.....	.....
For pay of the Navy, difference between furlough and waiting orders	Mar. 3, 1877	...	.....	...	227,183 43	.....	.....	.....	.....	.....
Grand total	.....	...	.....	...	271,949,847 92	.....	317,120,833 47	50,971,070 07	5,786,618 85	271,936,382 25
Balance									13,465 67	
The actual Treasury balance is									13,424 98	
Difference (this difference is occasioned by two outstanding warrants for that sum)									40 69	

a Transferred to "Contingent expenses."

b (?)

DETAILED MOVEMENTS OF VESSELS.

NORTH ATLANTIC STATION.

The force on this station is still under the command of Rear-Admiral S. D. Trenchard, and now consists of the Powhatan, (flag-ship,) 17 guns; Plymouth, 12 guns; Swatara, 8 guns; Ossipee, 8 guns; Enterprise, 6 guns; and the tugs Pinta and Seaweed. The New Hampshire and Pawnee still continue as store-ships at Port Royal, S. C. The iron-clads Ajax, Catskill, Lehigh, Manhattan, and Mahopac, at the anchorage in James River, Virginia, or preparing at Norfolk to go there, and the Montauk, Passaic, and Wyandotte, at Washington, are in semi-commission in reserve for sea-service. The iron-clad Canonicus remains in commission off New Orleans. The iron-clads Dictator and Saugus were put out of commission—the Dictator June 1, at League Island, and the Saugus October 8, at Washington. The Hartford, Adams, Alliance, Essex, Ranger, and Shawmut were attached to this station at different times during the year. The flag of Rear-Admiral Trenchard was transferred from the Hartford to the Powhatan July 4, and the first-named vessel was sent to the navy-yard, Norfolk, to be fitted as the flag-ship of the South Atlantic station. On the 20th of August Rear-Admiral Trenchard shifted his flag, temporarily, while the Powhatan was being repaired, to the Plymouth, and afterward to the Ossipee, and hoisted it again on the Powhatan October 2. While the Swatara was off Washington, during the labor-strike in July, his flag was also temporarily hoisted on that vessel.

The Hartford, as flag-ship, sailed on a cruise to the West Indies from Hampton Roads March 28, and touched at Bridgetown, Barbadoes, Saint Pierre, Martinique, Saint Thomas, Santa Cruz, and Matanzas, and arrived at Port Royal, S. C., May 28. She left there on the 30th and reached Hampton Roads, Virginia, June 4. On the 10th of July she went to the navy-yard, Norfolk, to be prepared as the flag-ship of the South Atlantic station. (See South Atlantic.) The Powhatan arrived at Hampton Roads July 2, from Annapolis, Md., and Rear-Admiral Trenchard's flag was hoisted on her July 4. On the 20th of August she was sent to the Norfolk navy-yard for repairs. She left that yard October 13, Rear-Admiral Trenchard's flag having been hoisted on the 2d of October, and anchored in Hampton Roads; departing thence on the 22d for New York, she arrived at that port October 23, and leaving on the 12th November, she returned to Hampton Roads the 14th.

The Plymouth left Hampton Roads December 23, 1876, and arrived at the navy-yard, Pensacola, the 9th of January following. Sailing thence on the 8th of February and passing through Eads jetties and works on the 9th, she anchored off New Orleans and remained until April 3, when she steamed up the Mississippi River as far as Vicksburg, stopping at Donaldsonville, Baton Rouge, and Natchez. She returned to New Orleans May 9. On the 19th she left that port, reached Pensacola on the 21st, and sailed thence on the 24th, arriving at Vera Cruz, Mex., June 1. Leaving that place after about a month's stay, she reached Port Royal July 1. She arrived at Norfolk as convoy for the iron-clad Mahopac on the 11th, and on the 22d left, and anchored off Alexandria, Va., on the 23d. When the services of this vessel were no longer needed in connection with the labor-strike, she sailed August 18 for New York, where she remained until September 30, when she left Hampton Roads, arriving there October 2. On the 8th went to the

Norfolk yard to be calked, and on November 19, left Hampton Roads for St. Thomas and a cruise in the West Indies.

The Swatara left the navy-yard, New York, February 5, and arrived at the Norfolk yard on the 9th. On the 12th she left, and anchored in Hampton Roads. On the 12th of March she sailed for Aspinwall, via Puerto Plata, touched at the last-named-place, and arrived at Kingston, Jamaica, on the 29th, on her way to Aspinwall; which place she reached April 9. She remained there until June 14 following, when, after having made a visit to San Andres Island, she sailed for Port Royal, touching at Key West on the 22d, and reaching Port Royal on the 29th. On the 30th she left, convoying the iron-clad Catskill, and arrived at Norfolk with her on July 4. On the 21st she left Hampton Roads, and anchored off the navy-yard, Washington, on the 23d. When her services were no longer needed in connection with the labor-strike, she sailed August 11 for Hampton Roads, where she arrived on the 12th. On the 12th of September she left for New York, and reached the navy-yard there on the 14th. On the 23d of October she left New York for Hampton Roads, reaching there the 25th.

The Ossipee left New Orleans February 9 and arrived at Pensacola February 11. On the 19th of March she sailed for Cuba, and after cruising off that coast she came to Key West, arriving there on the 10th of May. On the 15th she arrived at Port Royal, and convoyed the iron-clads Ajax and Manhattan in June following to Norfolk, arriving there with the last-named on the 23d of June. On the 12th of September she left for New York, and reached there the following day. After cruising as far as Portland, Me., in October, she returned to New York on the 19th of that month, and departed thence on the 29th for Hampton Roads, reaching there on the 31st, and on the 8th November went to the Norfolk yard for repairs to her engines.

The Enterprise was put in commission at the navy-yard, Portsmouth, N. H., March 16. On the 11th of August she sailed, and reached Hampton Roads on the 14th. On the 27th she arrived at the Norfolk navy-yard, remained there for repairs, and left Hampton Roads on the 22d November for New Orleans, for surveying duty in that harbor.

The Huron arrived at Port Royal December 4, 1876, and on the 18th of March, 1877, proceeded on a cruise to the north coast of South America, touching at St. Thomas, Port au Spain, Trinidad, visiting many places off Venezuela, and arriving at Puerto Cabello May 12. On the 15th of June she arrived at Aspinwall, and at Key West, Fla., July 2. On the 22d she arrived at the navy-yard, Norfolk, and on the 26th off the navy-yard, Washington. When her services were no longer required in connection with the labor-strike, she sailed August 11 for Hampton Roads, arriving on the 12th and leaving on the 15th for the New York navy-yard, which place she reached on the 28th. On the 15th November she left New York, and arrived at Hampton Roads on the 17th. On the 23d she left for the West Indies, for duty connected with telegraphic longitude and for general cruising, and on the 24th, at about 1.30 a. m., she was wrecked off Nag's Head, coast of North Carolina.

The Adams arrived at Port Royal in November, 1876, left on the 10th of March, 1877, and reached the navy-yard, Norfolk, on the 12th. On the 19th of April she sailed for the South Atlantic station. (See South Atlantic.)

The Alliance was put in commission at Norfolk January 18, 1877, arrived at Hampton Roads February 16, and on the 9th of March sailed to join the European station. (See European.)

The Essex sailed January 31 from the navy-yard, Norfolk, for Vera Cruz and the coast of Mexico, and arrived at Key West on the 16th February, and off Vera Cruz on the 20th. She remained on this cruise till May 8, when she sailed for Key West, arriving on the 16th; departing thence she reached Port Royal on the 22d. On the 2d of June she left Port Royal, convoying the iron-clad Lehigh, and arrived at Norfolk on the 5th. Returning to Port Royal, she left on the 16th, convoying the iron-clad Saugus, and reached Norfolk on the 19th. On the 16th of August she sailed on a cruise to Liberia and the west coast of Africa, and when last heard from, October 19, had arrived at Monrovia, Liberia; on the completion of this cruise she is ordered to join the South Atlantic station.

The Ranger arrived at Hampton Roads December 22, 1876. March 8, 1877, was detached from the North Atlantic station and ordered to New York, arriving there on the 10th. On the 19th of April left for the Asiatic station. (See Asiatic.)

The Shawmut was put out of commission at the navy-yard, Norfolk, on the 22d of January.

SOUTH ATLANTIC STATION.

The Adams is at present the only vessel on this station, although the Hartford, as flag-ship of Commodore E. T. Nichols, appointed to command the station, is now *en route*. The Essex is under orders to join this station, also, on the completion of her cruise to the west coast of Africa. The Richmond, bearing the flag of Commodore C. H. B. Caldwell, then commanding the station, left Rio de Janerio December 30, 1876, for St. Catharine's, Brazil, arriving at that port January 4, 1877; leaving there on the 22d, she reached Montevideo the 29th, and remained there until the 1st of May, and returning to Rio de Janeiro on the 16th. On the 26th of June the Richmond left Rio, and arrived at Hampton Roads on the 22d of August, remaining there till the 27th, when she sailed for Boston; reaching there on the 1st of September, she was put out of commission on the 18th.

The flag of Commodore E. T. Nichols, as commanding the United States naval force on the South Atlantic station, was hoisted September 17 on the Hartford, at Norfolk, and that vessel sailed October 13 for her station, and when last heard from, November 4, had arrived at Funchal, Madeira.

The Adams arrived at Rio de Janerio June 2, having left Hampton Roads, Virginia, on the 19th of April, and on the 13th of June left to search for Madeiras Rock. On the completion of this duty she returned to Rio, and on the 17th of July sailed for Bahia, returning from thence to Rio August 17. She has orders to leave this station about November 1, to join the South Pacific station.

The Frolic arrived at Montevideo January 31 from a cruise up the river, and on the 10th of February left for the same destination. On the 16th of March rendered assistance to the wrecked American ship Admiral, returning to Montevideo on the 26th, and remaining there until May 1, when she departed for Rio, reaching there on the 17th. On the 13th of June the Frolic accompanied the Adams in the search for Maderias Rock, and on the completion of this duty returned to Rio. On the 6th of September, in obedience to orders of the department, she left, and arrived at Hampton Roads October 19, and on the same day sailed for Washington, where she arrived on the 21st, and was put out of commission on the 31st.

EUROPEAN STATION.

The following vessels comprise the force on this station, which up to the 5th of October continued under the command of Rear-Admiral John L. Worden: Trenton (flag-ship), 11 guns; Vandalia, 8 guns; Marion, 8 guns; Alliance, 6 guns.

The Gettysburg and Despatch are also within the limits of this command on special service. The Trenton left New York March 8, 1877, arrived at Villafranca April 18, and Rear-Admiral Worden's flag was transferred to her from the Marion April 19. On the 9th of May she sailed for Smyrna, Turkey, and arrived there the 15th. On the 9th of June, in company with the Marion, left for Salonica, arriving there on the 10th. Finding matters quiet, departed on the 13th, and returned to Smyrna. She remained there until August 25, on which day she left, and reached Villafranca August 30, and on the 4th of September left for Marseilles. On the 18th left Marseilles and arrived at Villafranca the same day, and on the 5th of October, at that place, Rear-Admiral William E. Le Roy relieved Rear-Admiral Worden of the command, and the last-named officer returned to the United States.

The Vandalia sailed from Smyrna for Constantinople January 5, and arrived off that city on the 7th, remaining until the 8th of July, and arriving at Smyrna on the 9th. On the 22d she sailed for the coast of Syria, to visit Latakia, Tripoli, Beirut, Haifa, Joppa, and Port Said, and return to Beirut. On the 10th of October was ordered to Villafranca, where she was at last accounts.

The Marion left Villafranca for Smyrna April 19, and remained there until June 9, when she left, in company with the Trenton, for Salonica, and on the 13th returned to Smyrna. On the 8th of July she left, and arrived off Constantinople the following day. She received orders to proceed to Smyrna, and was there at last accounts, October 22.

The Alliance arrived at Villafranca April 17, having left Hampton Roads on the 9th of March, and on the 19th was ordered to the coast of Syria, to visit all the ports up to Latakia, and return to Beirut. She made that cruise, and returned to Beirut May 22, remaining there until July 11, when she departed for Smyrna, reaching that place on the 16th. She has orders to proceed on 25th August to Salonica, and, after remaining there a few days, to return to Smyna. Was at Constantinople at last accounts, October 22.

The Gettysburg, on special surveying duty in the Mediterranean, sailed on the 13th of March for Constantinople, under orders of Rear-Admiral Worden, and remained there for one month, when she returned to execute the special duty assigned her.

The Despatch left Hampton Roads May 1, arrived off Constantinople June 14, and is on special duty there.

NORTH PACIFIC STATION.

The force on this station continues under the command of Rear-Admiral Alex. Murray, and consists of the Pensacola (flag-ship), 22 guns, and the Lackawanna, 10 guns. The Pensacola remained at Panama since the last report of the Secretary of the Navy until the 4th of April, when she sailed, visiting Punta Arenas, Acapulco, San Blas, Mazatlan, and La Paz, and arrived at San Francisco July 1. While at Acapulco, Rear-Admiral Murray inquired into the arrest of the United States consul, and secured his release and a satisfactory termination of the whole

affair. During the labor-strike, in July, the ship, in conjunction with the Lackawanna, rendered material assistance to the State authorities of California. She expected to sail on a cruise to the Sandwich Islands about the 1st of December.

The Lackawannna visited Guaymas, San Blas, and Mazatlan, arriving at the last-named place December 12, 1876. On the 28th sailed for La Paz, and on the 6th of January, 1877, left there for San Francisco, arriving on the 25th. On the 20th of March she sailed to Mazatlan, arriving there on the 6th of April, and investigated the cases of the schooners Dreadnaught and Montana; left there on the 22d and reached Acapulco May 3. On the 20th of May left for Mazatlan, arriving on the 24th, and leaving same day for San Francisco, stopping at Pichilinque, and reaching San Francisco June 25.

On the 25th of August she sailed from the navy-yard, Mare Island, for Puget Sound, on the request of the Secretary of the Interior that a United States vessel might be sent to the Indian reservation in that locality, and reached Neah Harbor, Washington Territory, on the 4th of September. Remained in that locality until about October 22, when she was ordered to return to San Francisco, and reached there November 13, and is under orders to survey Tartar Shoal, the locality of the wreck of the Pacific mail-steamship City of San Francisco, and cruise along the Mexican coast.

SOUTH PACIFIC STATION.

The vessels now in this station are the Omaha, 12 guns, and the Onward, store-ship, at Callao. The force is now under the command of Rear-Admiral George H. Preble, who assumed command at Panama, and hoisted his flag on the Omaha March 11. The Adams is under orders to leave South America about November 1 to join this station. The Omaha remained at Panama during the last year until May 5, 1877, when she sailed, and visited Guayaquil, Payta, Chimbote, and Callao, Peru; arriving at the last-named place June 14. While there, Rear-Admiral Preble conferred with the United States minister in relation to the steamer Georgia, and the steamer was released by the authorities. August 1 left Callao for a cruise southward as far as Valparaiso and Talcahuano, to stop at the intermediate ports and return to Callao about November 1; reached Valparaiso October 1, and intended to leave on the 22d, on return to Callao; is under orders to return to the United States, either to San Francisco, or by Cape Horn to an Atlantic port. The Onward remains as the store-ship at Callao.

ASIATIC STATION.

The force on this station, Rear-Admiral Thomas H. Patterson having assumed command on October 4, consists of the Tennessee (flag-ship), 23 guns; Ashuelot, 6 guns; Monocacy, 6 guns; Alert, 4 guns; Ranger, 4 guns, and Palos, battery of howitzers. Rear-Admiral William Reynolds, having been condemned by medical survey, left Yokohama on the 12th of August for the United States, leaving Captain Jonathan Young temporarily in command. The Kearsarge was attached to the station during the year, and the Monongahela, 11 guns, is now on her way.

The Yantic left Hong-Kong December 21, 1876, arrived at Norfolk May 18, 1877, and was put out of commission on the 30th. Rear-Admiral William Reynolds, then in command of the force on this station, turned over the command to Captain Young, the senior officer, August

12, and returned to the United States by passenger-steamship to San Francisco. The Tennessee left Yokohama December 17, 1876, and arrived at Hong-Kong on the 28th; left January 4, 1877, for Bangkok, and arrived at the mouth of Menam River, Siam, in company with the Ashuelot, on the 11th; remained there until the 31st, when she sailed for Singapore, reaching there February 4. On the 14th left, and arrived at Labuan, Borneo, the 19th, Manila on the 26th, and departed thence for Hong-Kong on the 28th, where she arrived March 3. On the 7th of April sailed for Yokohama, Japan; arrived there the 12th, and was there at last accounts. Is under orders to leave the station between the middle of February and middle of March and return to the United States.

The Ashuelot left Shanghai December 21, 1876, and arrived at Hong-Kong on the 25th; left, and arrived at the mouth of Menam River, Siam, January 11, and Bangkok on the 12th. On the 27th left Bangkok and Menam River the 31st; arrived at Saigon February 3, departed on the 8th, and reached Hong-Kong on the 19th. On the 13th of March sailed for Canton, and returned to Hong-Kong on the 31st. Left April 16, arrived at Canton same day, and on the 19th sailed with the United States consul and visited Noihon, island of Hainan, Naion, Pakhoi, island of Guiay Chu, newly-opened ports. Left the last-named place on the 30th, arrived at Hong-Kong May 2, and on the 4th departed for Canton, reaching there the 5th. Sailed on her way up the coast of China, and reached Swatow June 1. On the 3d of July arrived at Shanghai from Ningpo. On the 10th of August she left for Chefoo, where she was at last accounts.

The Monocacy visited till May 23, 1877, the new ports on the Yangtse River. On the last-named date she left Shanghai for Tientsin, stopped at Chefoo, and left there June 2, arriving at Tientsin on the 4th. On the 18th of July arrived at Chefoo from Tientsin. Left Chefoo August 14, arrived at Nagasaki the 17th, and on the 28th proceeded to Kobe and Yokohama, arriving at the last-named port September 1.

The Alert during the month of January was at Nagasaki, having arrived December 6, 1876, from Shanghai; she left on February 1, arrived at Kobe the 4th, and Yokohama the 9th. On the 12th of May left for Damphier Straits to search for shipwrecked persons reported to be on some of the islands in that vicinity, and, after a thorough search, finding the reports erroneous, proceeded to Hong-Kong, arriving there July 24. On the 29th left for Nagasaki, reaching that port August 6, and departing thence on the 10th for the scene of the wreck of the American vessel Roving Sailor, wrecked about forty miles from Yokohama. Arrived at Yokohama on the 15th; departed thence September 13 for Hakodadi, Vladivostock, Niigàta, and Nagasaki, to touch at Lendai, Kamaishi, and Katakisi Bays to ascertain the correct position of the island north of Katakisi Bay.

The Ranger arrived at Singapore August 8, having sailed from New York April 19 to join the station; left August 11 and arrived at Hong-Kong on the 24th, and at Nagasaki September 8, and was at last accounts under orders to Shanghai.

The Palos was at Yokohama during the months of December, 1876, and January, 1877, and on the 12th of February left for Nagasaki, where she arrived March 3, having visited Kobe, departed thence on the 8th, and arrived at Ningpo the 11th. On the 19th left for Wenchow with the United States consul, and visited that place; returned to Ningpo March 30, and arrived at Shanghai April 7. On the 19th of June left for Nanking with the secretary of legation on board, stopped at Ching Kiang, and

reached Nanking June 20; departed thence on the 30th, and returned to Shanghai July 2. In August, 1877, was ordered to proceed to the new ports of Ningpo, Poo-Foo, and Wenchow, and afterward to return to Shanghai.

The Kearsarge left Hong-Kong January 15 for Yokohama and Nagasaki, touching at all consular ports on the China coast as far as Ningpo. Arrived at Foochow February 4 from Amoy, Swatow, and Hong-Kong; arrived at Ningpo February 21 from Foochow, and at Nagasaki March 1. On the 24th of May departed thence for Kagosima, and returned on the 31st. Arrived at Kobe July 9 from Nagasaki, and on the 30th was ordered to the assistance of the steamship Oceanic, reported as having lost her screw in the vicinity of Van Diemen's Straits. Arrived at Hong-Kong August 9; departed thence on the 15th, and reached Nagasaki on the 22d, and was ordered to return to the United States (Boston) via the Suez Canal. Left Nagasaki September 3 and reached Hong-Kong on the 10th and Singapore on the 25th. On the 1st of October intended to leave for the island of Ceylon, *en route* to Boston, Mass., via the Suez Canal.

The Monongahela sailed from New York for the Asiatic station September 22, 1877, via the Mediterranean and Suez Canal, and arrived at Gibraltar October 25.

TRAINING-SHIPS, ETC.

The Minnesota, also the flag-ship, a part of the year, of Vice Admiral Rowan, port-admiral at New York, the Monongahela, a portion of the year, the Constitution, the Saratoga, and the Supply, tender to the Minnesota, have all been used as training-ships for enlisted boys in the Navy. The Constellation and Mayflower have made their usual cruises as practice-ships for cadet-midshipmen and cadet-engineers. The Gettysburg has continued on special duty in the Mediterranean. The Guard was put in commission at New York September 18, 1877, for special duty in Europe in connection with telegraphic longitude work, and left New York October 29 for Lisbon, Portugal. The Rio Bravo has remained on the Rio Grande River, Texas, and the Michigan on the lakes. The Speedwell has been on duty connected with the United States Fish Commission during the summer and until October 25, when she was put out of commission. The Tallapoosa has made her usual trip as dispatch vessel, to the several navy-yards.

APPENDIX.

No. 1.—ESTIMATES SECRETARY'S OFFICE.

Estimates of appropriations required for the service of the fiscal year ending June 30, 1879, by the Navy Department.

Detailed objects of expenditure, and explanations.	Estimated amount which will be required for each detailed object of expenditure.	Amount appropriated for the current fiscal year ending June 30, 1878.
SALARIES.		
Secretary, per act March 3, 1877 (R. S., p. 69, sec. 415; 19 Stat. at L., p. 311)	$8,000	
Chief clerk, per act March 3, 1877 (R. S., p 69, sec. 416; 19 Stat. at L., p. 311)	2,500	
Disbursing-clerk, per act March 3, 1877 (R. S., p. 69, sec. 416; 19 Stat. at L., p. 311)	2,000	
Four clerks of class four, per act March 3, 1877 (R. S., p. 26, sec. 167; 19 Stat. at L., p. 311)	7,200	
Three clerks of class three, per act March 3, 1877 (R. S., p. 26, sec. 167; 19 Stat. at L., p. 311)	4,800	
One clerk of class two, per act March 3, 1877 (R. S., p. 26, sec. 167; 19 Stat. at L., p. 311)	1,400	
Four clerks of class two (submitted)	5,600	
Two clerks of class one, per act March 3, 1877 (R. S., p. 26, sec. 167; 19 Stat. at L., p. 311)	2,400	
Four clerks of class one (submitted)	4,800	
Two messengers, at $840 each, per act March 3, 1877 (R. S., p. 26, sec. 167; 19 Stat. at L., p. 311)	1,680	
Two laborers, at $720 each, per act March 3, 1877 (R. S., p. 26, sec. 167; 19 Stat. at L., p. 311)	1,440	
	$41,820	$31,420
CONTINGENT EXPENSES.		
Stationery, furniture, newspapers, and miscellaneous items (appropriated) (19 Stat. at L., p 312)	5,000	2,500
SALARIES, BUILDING.		
Superintendent, per act March 3, 1877 (R. S., p. 69, sec. 416; 19 Stat. at L., p. 312)	250	
Five watchmen, at $720 each, per act March 3, 1877 (R. S., p. 26, sec. 167; 19 Stat. at L., p. 312)	3,600	
Two laborers, at $720 each, per act March 3, 1877 (R. S., p. 26, sec. 167; 19 Stat. at L., p. 312)	1,440	
	5,290	5,290
CONTINGENT EXPENSES, BUILDING.		
Incidental labor, fuel, light, and miscellaneous items (appropriated,) (19. Stat at L., p. 312)	7,000	5,000
CONTINGENT, NAVY.		
Rent and furniture of buildings and offices not in navy-yards; expenses of courts-martial and courts of inquiry, boards of investigation, examining-boards, with clerks' and witnesses' fees, and traveling expenses and costs; stationery and recording; expenses of purchasing-paymasters' offices at the various cities, including clerks, furniture, fuel, stationery, and incidental expenses; newspapers and advertising; foreign postage; telegraphing, foreign and domestic; copying; mail and express wagons, and livery and express fees, and freight; all books for the use of the Navy; care of library; experts' fees, and costs of suits; commissions, warrants, diplomas, and discharges; relief of vessels in distress, and pilotage; recovery of valuables from shipwrecks; quarantine expenses; care and transportation of the dead; reports, professional investigation, and information from abroad; and all other emergencies and extraordinary expense arising at home or abroad, but impossible to be anticipated or classified, (appropriated) (19 Stat. at L., p. 385, sec. 1)	80,000	80,000
POSTAGE.		
Official postage-stamps for the Secretary's office and the bureaus of the Navy Department, (appropriated) (19 Stat. at L., p. 319)	20,000	20,000

No. 2.—NAVAL ACADEMY.

REPORT OF SUPERINTENDENT.

UNITED STATES NAVAL ACADEMY,
Annapolis, Md., November 13, 1877.

SIR: In submitting my annual report, I beg to renew the two recommendations I made last year:

1st. That the system pursued at West Point, of appointing cadets at least one year before they shall present themselves for admission, be adopted at the Naval Academy.

To this I would add the recommendation that, for each Congressional appointment and for each appointment "at large" there shall be, at the same time, appointed an alternate, to be examined in the event of the failure to qualify by the person first appointed.

2d. That Congress be moved to make the necessary appropriation to build an additional wing to the new cadet quarters, so that the cadets may be quartered under one roof, to the great benefit of their discipline, their health, and the economy of the administration of the school. We have now ninety cadet-engineers, and the present cadet quarters are not large enough to lodge all the cadets, with proper consideration for their health and comfort.

In my opinion the number, both of cadet-midshipmen and cadet-engineers, might be advantageously decreased. During the present winter, for the first time, the list of ensigns will be filled, and midshipmen who shall have passed their examination for promotion to that grade must wait for new vacancies before they can reach it. Under our present system, this number of passed midshipmen will increase every year, and we shall have the sorry sight of an ever-increasing number of young gentlemen—two, or perhaps ten, years after their graduation—waiting, with hope long deferred, for promotion for the lowest grade of commissioned officers.

We shall also, under the present system, graduate every year many more cadet-engineers than will supply the waste of that corps. I would therefore respectfully suggest that either the number of cadet appointments be largely decreased, or that a new system be adopted which would produce far better results than the one now in force. I would suggest that some able actuary be found to calculate the annual waste of the Navy, both of the line and of the engineer corps; and further, that he should compute how many cadets should each year enter the second class to supply that waste, and keep the number of officers in the lower commissioned grades of the Navy always full.

This table could be made more easily than the tables of the life-insurance companies, and might be rearranged every five or ten years. The number of cadets for the second class being thus decided, admission to it should be the prize, for which all entering the Naval Academy should compete during the first two years of their novitiate. Those who failed to win the prizes, might graduate at the end of their first two years, and return to their homes with an honorable diploma, and would well repay the country for the cost of their training by carrying to every Congressional district in the land the habit of discipline, the traditions of military life, and a practical knowledge of the use of arms, which would make them invaluable in the organization of volunteer regiments whenever the country found occasion to call its citizens to arms.

There is a subtle power in military discipline which cannot be readily

defined, but which gives to those who have learned to obey a great capacity to command with ease and with ready acceptance. Under this system no cadet need be found deficient, except for grave misconduct or for contumacious and inexcusable neglect of study.

All countries are following the example of the United States in raising their standard of naval education; for all the world begins to recognize that a scientific training is highly desirable in those who are to command the ships of war of to day (and of the future), with their new engines of destruction, their complicated machinery, and their novelties of structure. When I entered the Navy, the wooden line-of-battle-ship—a short ship, easily handled under canvass—was the highest type of a fighting vessel. Its guns were weak and of small caliber, having upon them no sights worthy of the name; the powder was poor; flint-locks were used; the whole ordnance equipment was very bad; there were no torpedos; no rifled cannon; no steam-engines; no armor, nor any of those extraordinary provisions of strength such as the foreign iron-clads now exhibit, to enable them to endure the shock of battle and the terrible strain to which their own machinery subjects them when they are driven by it at their greatest speed.

The education given at the Naval Academy lays a foundation upon which the graduates of this school may build the highest professional education. It gives them keys by which they may unlock the mysteries of ship-building and ordnance and gunnery, and all the intricacies involved in the torpedo system, and, at the same time, it trains them to the use of all arms; it exercises their muscles so as to develop the manliest habits, and during four years practical work as "topmen," it teaches them the duty of a private seaman, a training that was not given to the naval youth of my day, and which, to my mind, gives to our graduates a great advantage, by enabling them to sympathize with those whom they are to command, from having themselves performed a private seaman's duty, both aloft and at the guns.

There is, naturally, great complaint now from the disappointed friends of cadets who have been too idle to profit by the opportunities given them here, or, in some rare cases, perhaps, too dull. It is my carefully considered belief that any lad of even a little less than average ability, can complete successfully the course of studies here, if he will study faithfully and diligently. Those of more brilliant capacity can attain the same result with a very moderate amount of study. To take honors at the school requires both capacity and hard work.

The government offers to its young men at the Naval Academy an honorable career, and an excellent education at the countrys' cost, and it demands from them only that they shall not be dull, idle, unfaithful, or vicious.

The professors and officers are uniformly desirous to graduate as large a class as possible; they are ready to give all the assistance in their power, and it is, of course, a matter of anxiety to the academic board to avoid the great concern its members feel when witnessing the disappointment of parents and friends, caused by the failure of those whom they had hoped had secured an honorable calling.

It is sometimes claimed that the course here is too severe, and I venture to give it as my opinion that such is not the case, and I think that if the demands of the course were largely decreased, we should have no more graduates. As the demand decreased, the effort of the student would diminish; for it is now not the love of learning, but the fear of failure, which prompts the majority to exertion, and with the larger number the effort is to do as little instead of as much as possible.

It is sometimes objected that we lay too much stress upon the study of mathematics; that the cadets are not needed as mathematicians but as sea-officers.

I know of no study that will so carefully train the mind to quick, clear thought, and to the ready application of principles, as the study of pure and applied mathematics. The course of mathematics here leads directly to those principles of physics and to the scientific knowledge which have now become essential to the sea-officer, who would fully understand the engines of war committed to his care. He must still be a seaman, but a scientific seaman, and his science and mental training will in no degree abstract from his nautical skill.

I beg to submit a table showing the number of graduates during the administration of the last five superintendents of the Naval Academy, no class having graduated during the administration of the earlier superintendents.

I also append an order directed to the several heads of departments, and their replies thereto.

I have the honor to be, very respectfully, your obedient servant,

C. R. P. RODGERS,
Rear-Admiral, Superintendent.

Hon. R. W. THOMPSON,
Secretary of the Navy, Navy Department, Washington, D. C.

The following table shows the number of graduates during the administration of each of the last five superintendents of the Naval Academy.

Superintendents.	Number of classes.	Number of graduates.	Number admitted in the same classes.	Per cent. of graduates.
Admiral Goldsborough	3	52	134	39
Commodore Blake	8	272	718	38
Admiral Porter	4	315	666	47
Rear-Admiral Worden	5	200	434	46
Rear-Admiral Rodgers	3	117	252	46
Total	23	956	2,204	43.4

UNITED STATES NAVAL ACADEMY,
Annapolis, Md., November 14, 1877.

[Order No. 139.]

Heads of departments will present, as soon as possible, a clear, brief, and succinct statement of the professional importance of the studies under their charge in the academic course, showing exactly why they are necessary or useful to future naval officers in the duties of their profession, or as an indispensable preparation for higher branches.

C. R. P. RODGERS,
Rear-Admiral, Superintendent.

REPORT OF BOARD OF VISITORS.

UNITED STATES NAVAL ACADEMY,
June 20, 1877.

SIR: The board of visitors appointed to attend the annual examination at the United States Naval Academy, at Annapolis, Md., have the honor to submit the following report of their proceedings:

The board assembled on the morning of the 11th instant, all the mem-

bers being present. An organization was effected by the election of Commodore J. W. A. Nicholson, United States Navy, as president; Brig. Gen. W. H. Emory, United States Army, as vice president; and Master H. O. Rittenhouse, United States Navy, as secretary.

Committees were appointed to whom were assigned the various subjects coming before the board for examination, and during the ten days the board was in session daily meetings were held.

We take great pleasure in expressing our general satisfaction with the Academy and its administration, and in acknowledging the readiness with which every facility has been accorded us by the superintendent, Rear-Admiral C. R. P. Rodgers, and his assistants in all the departments, for a full examination of everything pertaining to the institution and its management. In our investigations we have found scarcely anything to criticise and nothing to censure. The discipline observed is, in our opinion, all that can be desired, being strict and exacting, yet administered with uniform kindness and regard to the welfare and sensibilities of the cadets.

We deem it but due to the corps of instructors at the Academy to refer in terms of high commendation to the thoroughness with which they perform their work and the excellence of their methods of instruction. The plan of frequent examinations, generally written, during the academic year, has advantages over the oral method so obvious as scarcely to need enumeration. The facts and principles learned are thus more deeply impressed, and the habit of facile and accurate expression of thought acquired in connection with each branch taught. This method imposes an immense amount of labor on the instructors, and can only be fully carried out in institutions in which the heads of departments are aided in their work by a number of subordinates proportionate to the number taught.

APPOINTMENT OF CADETS.

We repeat the recommendation contained in previous reports, that cadets should be appointed a year in advance, as at West Point, with an alternate, also a year in advance, so that he may not be found unprepared if the first should fail to pass the examination for admission.

APPOINTMENT OF INSTRUCTORS.

We cordially indorse the recommendation of Rear-Admiral Rodgers, the superintendent, that to secure and retain the best ability for this institution, professors should be appointed to the several departments, as at the West Point Military Academy, with the rank and emoluments of commander, and after ten years' service with the rank and emoluments of captain in the Navy.

GROUNDS, BUILDINGS, AND SANITARY CONDITION.

We have to commend the excellent order of all portions of the establishment. The grounds could hardly be more beautiful. The residences are comfortable; the general sanitary condition excellent; but we consider the following changes and improvements, most of which have been recommended by former boards, as essential to the growth and prosperity of the Academy.

We urge the erection of another building for the cadets connected with or near the present cadets' quarters, and the removal into a separate building, or to the upper story of the present new building, of the kitchen, laundry, and store-rooms, now occupying the basement of the cadets' quarters.

We highly commend the suggestions made by the superintendent in his report to the Navy Department, and those contained in the late very complete sanitary report of Medical Inspector A. L. Gihon, and especially advise that immediate steps be taken to acquire the premises comprised in the small triangle lying between Hanover street and the government property on Grave-Yard Creek, with the removal of the gas-works, the slaughter-house, and the objectionable neighborhood of filthy shanties and cabins, with the surface drainage incident to such localities.

A new armory, drill-room, and gymnasium are of imperative necessity, and we strongly recommend their establishment.

The erection of suitable quarters for the marine-guard, and their transfer from the objectionable location on board the Wyandank, is recommended in this connection.

The addition of another story to the rear wing of the sick-quarters for cadets in the Academy grounds is recommended, which will complete the accommodations of this excellent department at a very small expense.

The recent outbreak of an epidemic of measles in the Academy has demonstrated the necessity of a hospital outside the inclosed grounds of the Academy to which such cases of sickness may be transferred. The building on the government farm answers every requirement of the station, and can be maintained at a small expense. We recommend that a sufficient appropriation be made therefor.

The necessities of the department of steam-engineering require a small addition to the present building. We are of the opinion that the wants of this important department should be liberally supplied, and this will require only a slight expense without material alteration of plan or appearance.

We have to repeat the recommendation made by former boards, of new and proper accommodations for the department of physics and chemistry.

THE COMMISSARIAT.

The commissariat of the Academy is just at this time in a transition state, having been for the past twenty-six years and until quite recently under the administration of Colonel Swann, a civilian of good business capacity, who, in addition to providing for the cadets, kept a market of provisions and groceries for the convenience of officers' families, with great acceptance. Upon the recent sudden death of Colonel Swann it was deemed best by the authorities of the Academy, having in view the experience at the Military Academy at West Point in this respect, that the commissariat should hereafter be in charge of a commissioned officer who should confine his duties simply to the proper subsistence of the cadets and be militarily responsible for the efficiency and economy of his administration. Paymaster A. S. Kenny, of the Navy, was on the 7th ultimo selected and assigned by the Navy Department to this duty. The introduction of a new system being so recent, all details have not yet been fully worked out; but, so far as investigated by the board, it is marked with ability and judgment, the provisions furnished being of unexceptionable quality, the allowance liberal and well prepared, and served in an attractive manner.

SEAMANSHIP, GUNNERY, AND NAVIGATION.

In the departments of seamanship, gunnery, and navigation we found a high state of efficiency. We believe the course in these studies to be

as complete as it can be, considering the time necessarily taken up by the other branches. It is recommended that two suitable brigs of light draught be obtained, in order that the cadet-midshipmen may be more thoroughly exercised in the seamanship branch of their profession. It is suggested that these brigs be permanently stationed at the Naval Academy, and that they supply the place of the Dale, now moored at the wharf. The advantage of this change would be that the cadets would thus be enabled to see at once the effect of all evolutions in a vessel under way, which they cannot do in a vessel moored at the wharf.

CADET-ENGINEERS.

Owing to the great advance in and growing importance of the science of steam-engineering and naval architecture, the board are of the opinion that an advanced course of instruction, both theoretical and practical, is desirable for the cadet-engineers. After a most careful investigation into the present admirable course on these subjects instituted by the Superintendent, we are forced to the conclusion that it would be impossible to add any more to the same without detriment to the other branches necessarily required in the time given for instruction at the Academy.

As at the present time there are no schools or prominent building establishments in the United States where, by observation and study, a theoretical and practical knowledge of their profession can be acquired, such as would be necessary to enable the young engineer to arrive at eminence in all branches of his profession, we feel that we cannot too earnestly recommend that four or five of those cadet-engineers who shall have achieved a prominence in their academic course shall be given one or two years (as the Navy Department may elect) in the schools and establishments of engineering and naval architecture of Great Britain, where, in our opinion, are to be found the best establishments of that kind.

We would also recommend that a post-graduate course should be given to the midshipmen and cadet-engineers not specified above, which should be one that their duties, and distractions incident to a life on board ship, shall not prevent the cadets complying fully with all of its requirements. This course should be arranged in detail by the Superintendent and his able corps of assistants.

ENGLISH STUDIES AND MODERN LANGUAGES.

We have been much pleased with the general course of English studies, and are satisfied with the care of the teachers and the diligence and progress of the cadets in the oral examinations in the French language; the proficiency of the cadets, where so little time can be devoted to this branch of study, exceeded our expectations. We must, however, state our conviction that the time allowed to modern languages is not sufficient for a thorough study of two even so nearly related as French and Spanish; at the same time we do not see how the time could be enlarged without taking it from other branches of equal importance. We would therefore suggest that the academic board be requested to consider whether a different distribution of time in the study of French and Spanish can be made, so that one of those languages shall be studied more thoroughly in the Academy, and the other be constituted a part of the post-graduate course.

THE LIBRARY.

The arrangement of the books in the library and the regulations for their use seem to be all that can be desired. There are now 19,000

volumes of valuable and well-selected works in the collection, and we earnestly recommend a liberal appropriation to be made annually by Congress for its gradual increase.

Besides the general collection of such books as are required in the library of every institution of learning of the first class, the library of the Naval Academy should have the means of making a complete collection of voyages and travels, and works on geography and the exploration of the earth's surface. This may well be made its specialty, as no other large library has the same reasons for making its collection of such works complete; and one such collection, where everything on the subject may be found, will be of benefit to the whole country.

The room now appropriated for the purpose seems quite insufficient for the proper accommodation of the library, and at no distant time other arrangements will have to be made. In view of this necessity we also recommend that provision for a fire-proof building, or extension of the present one, should be immediately considered and provided for. The collection is too valuable to be risked in an ordinary building.

In the library is a small collection of portraits of the former heroes of our Navy, and the board think it highly desirable that this should be increased, thus gradually forming a national collection of the portraits of those men whose names have always been "familiar in our mouths as household words." There are many such portraits in the possession of private families, scattered throughout the country, which (or copies of them) might well be given to this collection, thus insuring their preservation in a national institution, where the coming men of the Navy may gather from their view the true spirit of their profession. Perhaps we may properly add that, in addition to portraits, this might be made a museum for historical pictures and relics of the Navy with great benefit to the cadets, and we therefore recommend the consideration of the subject.

In conclusion, and as the result of our examinations, we consider it our duty to strongly commend this important and interesting branch of the public service to you, and through you to the nation, as deserving of the most liberal support.

All of which is respectfully submitted.

J. W. A. NICHOLSON,
Commodore, U. S. Navy, President of Board.
W. H. EMORY,
Brigadier-General U. S. A., Vice-President of Board.
R. P. BUCKLAND, *Ohio.*
W. I. KIPP, D. D., LL.D.,
Bishop of California.
W. G. HAMMOND,
Iowa State University.
J. F. QUINBY, *New York.*
S. R. FRANKLIN,
Captain, United States Navy.
J. C. ELDREDGE,
Pay Director, United States Navy.
S. C. HOUK, *Tennessee.*
J. A. LEONARD, *Minnesota.*
J. P. SPRAGUE,
Chief Engineer, United States Navy.
F. M. GUNNELL,
Medical Director, United States Navy.
C. A. CURTIS, *Massachusetts.*

The honorable the SECRETARY OF THE NAVY.

REPORTS OF CRUISE OF PRACTICE-SHIPS.

UNITED STATES NAVAL ACADEMY,
Annapolis, Md., November 21, 1877.

SIR: I beg to submit the report of Commander Terry, commanding the practice-ship Constellation, having the cadet-midshipmen on board, and the report of Commander Sampson, commanding the practice-steamer Mayflower, having on board the cadet-engineers, during the practice-cruises in the past summer.

I am, very respectfully, your obedient servant,

C. R. P. RODGERS,
Rear-Admiral, Superintendent.

Hon. R. W. THOMPSON,
Secretary of the Navy, Washington, D. C.

UNITED STATES NAVAL ACADEMY,
Annapolis, Md., September 25, 1877.

SIR: In obedience to your order of June 16, 1877, I have the honor to submit the following report of the practice-cruise of the Constellation during the past summer.

On the 22d day of June, thirty-six cadet-midshipmen of the first class and fifty-seven of the third class were embarked, and on the 26th day of the same month we left Annapolis Roads. July 2 we arrived off New Bedford, and from that date until July 20, the ship remained in Buzzard's Bay, busily employed exercising.

As soon as the dock at New York was ready to receive her, she proceeded there to repair damages sustained by grounding last summer and this.

Returning to Buzzard's Bay, after less than a week at New York, the exercises were continued until August 24, when we visited Newport for a week. From there we returned to the Chesapeake, disembarking the cadets at Annapolis, September 18.

The organization, the general character of the cruise, and the methods and extent of instructions were almost identical with those of the two preceding years.

I would respectfully call your attention to the amount of practical work accomplished by both classes under the system employed during the last three years. I have had some experience in former methods, both as a midshipman and as executive officer, and I know that in those cruises the opportunities afforded the cadets for practical work were comparatively few.

In Buzzard's Bay, by anchoring at night and getting under way in the morning, the ship's company was afforded ample time for rest, and the result was a cheerful and ready obedience during the day, although a constant demand for heavy work was caused by the character of our exercises.

Aside from the general work of making and taking in sail, reefing, sending up and down light yards, bending and unbending sails, &c., the cadets of the first class, during the last three summers, have performed, in charge of the deck, more than one thousand maneuvers, including tacking, wearing, box-hauling, chapelling, getting under way, and anchoring.

The great amount of seamanship drill at the Academy renders heavy

spar exercises during the practice-cruise unnecessary, and consequently no attention is paid to them.

I inclose, in duplicate, the reports of the two classes who were on board.

I am, sir, very respectfully, your obedient servant,

EDWARD TERRY,
Commander, Commandant of Cadets.

Rear-Admiral C. R. P. RODGERS,
Superintendent Naval Academy, Annapolis, Md.

UNITED STATES STEAMER MAYFLOWER,
UNITED STATES NAVAL ACADEMY,
Annapolis, Md., September 20, 1877.

ADMIRAL: In obedience to your order of June 16, I have the honor to submit the following report of the practice-cruise of this ship with the two classes of cadet-engineers embarked on board. The first class numbered fifteen (15) and the third class twenty-two (22) members. Passed Assistant Engineers L. W. Robinson and C. W. Rae were ordered from the Academy as instructors to the cadets during the cruise.

The cadets were watched, stationed, and all their mess arrangements completed before they came on board. Both classes were embarked on the 21st of June, and the Mayflower sailed from Annapolis on the 26th. The general plan of instruction has been similar to that of previous cruises.

Some modifications have been found necessary, however, as this is the first cruise during which two classes have been under instruction. The first class, having studied their profession at the Academy, and having made one practice-cruise before, required much more advanced instruction than the members of the third class. It was found impracticable for this reason to instruct both classes at the same time; and as the classes are quite large, each one required the whole attention of both instructors whenever they visited a place for instruction.

The plan followed has been for both instructors to take the classes on shore, on alternate days, adapting the instruction to the class in hand. The members of the first class have been required to give their attention to special machinery and mechanical drawings of improved machinery, such as could be obtained in the draughting-rooms of the establishment visited.

The third class have been required to sketch and explain machine-tools.

As on previous cruises, the cadets of both classes have been required to make sketches and take notes upon the spot. The sketches have afterward been developed into more careful drawings in their sketch-books, and the notes carefully written out in their journals. These journals have been read and corrected by the instructors after each day's work. The sketch-books have been examined weekly by the instructors. Both journals and sketch-books have been examined at intervals by the commanding officer.

June 29.—Reached Wilmington, Del., where we were kindly furnished wharfage at the ship-yard of Messrs. Harlan & Hollingsworth. While there the cadets visited the works of the Diamond State Iron Company, Seidall & Hastings's Plate-Rolling Mills, and Harlan & Hollingsworth's. While at Wilmington a short leave was granted to ten of the cadets.

July 3.—Left Wilmington and reached Chester, Pa., the same day.

At the latter place the cadets visited the extensive ship-yard and machine-shops of Messrs. Roach & Sons.

July 7.—Left Chester and reached Philadelphia the same day, where the Reading Railroad Company placed a wharf at our disposal. While in Philadelphia the cadets visited the Tasker Iron-Works, Baldwin Locomotive Works, the works of William Sellers & Co., works of George V. Cresson & Co., and the International Exhibition; also the ship-yards of Messrs. Neafie & Levy, and William Cramp & Sons. Through the kindness of the latter firm, builders of the fine steamships of the American Steamship Company, the cadets were invited to take passage in the large steamer Pennsylvania down the river and bay to the capes. Accordingly the cadets were sent on board the Pennsylvania early on the morning of July 19, the Mayflower preceding the Pennsylvania down the river. When the steamship Pennsylvania had overtaken the Mayflower, near the Delaware capes, the cadets were received on board and the vessel proceeded to New York.

While at Philadelphia the cadets who had been granted leave at Wilmington rejoined the ship, and another party of nine were given the same privilege and ordered to rejoin the ship at New York.

July 20.—Reached Brooklyn navy-yard. At New York the cadets visited the Morgan Iron-Works, Delamater Iron-Works, Brooklyn Water-Works, Worthington Steam Pump Works, Brooklyn Hydraulic Works, and the works of Merrill & Sons.

At the navy-yard the cadets visited the draughting-rooms, machine-shops, and vessels. The party given leave in Philadelphia rejoined the ship, and another party of nine were granted leave, to report at Newport, R. I.

August 4.—Left the navy-yard and anchored the same day off Cold Spring, on the Hudson, where the cadets visited the foundery.

August 7.—Steamed over to Newburg, where the cadets visited the Greenwood Furnaces. During the 9th and 10th a short visit was paid to West Point.

August 10.—Returned to New York, and sailed from there the following day for Newport.

August 12.—Reached Newport, where the cadets on leave rejoined the ship; and the remaining nine were given leave, to rejoin the ship on her return to New York.

August 14.—Got under way from Newport, and the same day, in company with the flag-ship Constellation, anchored at Oak Bluffs, where the cadets were given leave to visit the shore for the remainder of the day.

August 15.—Got under way from Oak Bluffs, and the same day anchored at New Bedford. At this place the cadets visited the New Bedford Copper-Works and the works of the Morse Twist-Drill Company. The manufacture of the Morse twist-drill is to a certain extent a secret process, but the cadets were kindly explained the entire process, and the works of the company will doubtless in future be open to the inspection of the cadets on the cruise. The special machinery used in the works is highly interesting and instructive.

August 17.—Left New Bedford, and the same evening reached Newport. At the torpedo-station the cadets of the first class, whose previous studies at the Academy had prepared them to understand what they saw, had an opportunity of witnessing the manufacture of nitro-glycerine; also of examining the different forms of electric machines in operation at the station, and seeing the manufacture of the fuses and various torpedoes.

August 22.—Left Newport for Providence, where the cadets inspected the Hope Station pumping-engines, Providence Tool Company's Works, the works of the American Screw Company, the Providence Steam-Engine Company, and the Corliss Steam-Engine Works.

August 28.—Sailed from Providence, and reached New York the following day. Received on board the party of cadets who had been on leave. Coaled ship, and sailed for Washington on September 1.

September 2.—While off the capes of the Delaware, one boiler became disabled through defective tubes. The remainder of the passage to Norfolk was made under one boiler. As I was obliged to stop at Norfolk for repair, advantage was taken of the delay to have the cadets visit the machine-shops, draughting-rooms, and many of the vessels lying at the yard.

The repairs to the boilers requiring more time than was at first anticipated, you ordered that instead of going to Washington the ship come directly to this place, where she arrived September 11.

In conclusion, I have to report that the conduct of the cadets during the cruise, with two or three exceptions, has been very good.

The inclosed report of professional aptitude, attention to duty, deportment, &c., contains these points in detail.

The officers, without exception, have been zealous and efficient in the performance of their duties.

At all the establishments visited, the cadets have been received with uniform kindness, and every facility for their instruction placed at their disposal. In many cases their visit was anticipated, and special machinery set in motion, or interesting processes exhibited which they might not otherwise have understood.

I respectfully recommend that the visit to Wilmington, in future cruises, be omitted. The creek in which the ship must anchor is bordered by an extensive marsh, and at low water a large extent of the bed of the creek is exposed.

Respectfully submitted.

W. T. SAMPSON,
Commander, Commanding Mayflower.

Rear-Admiral C. R. P. RODGERS, U. S. N.,
Superintendent Naval Academy.

REPORT OF HEAD OF DEPARTMENT OF NAVIGATION.

UNITED STATES NAVAL ACADEMY,
DEPARTMENT ASTRONOMY, NAVIGATION, AND SURVEYING,
November 15, 1877.

SIR: Understanding order No. 139 to refer more particularly to the theoretical course in this department, I have in what follows confined myself to stating a plea for theory.

Our course in astronomy prepares the cadet for the consideration of problems in navigation; also for practice with those astronomical instruments which he may be called on to use if attached to the Coast Survey or to an expedition similar to the one on which the Guard is now engaged.

The course in navigation and surveying prepares the cadet to navigate a ship and survey a harbor. It is simply an application of his knowledge gained in the mathematical departments; to the solution of problems in navigation and surveying; to the mathematical investigation

of the deviation of the compass, as presented either in British admiralty publications or those of our own Bureau of Navigation; to the comprehensive consideration of the charts used in the United States Navy or Coast Survey, and to the intelligent use of such books as "Projection Tables, United States Navy," issued by Bureau of Navigation, 1868. Besides thus enabling him to understand very important branches of his profession, to read intelligently the numerous articles or books constantly appearing, which treat of navigation, on which an officer should be able to express a sensible opinion, the theoretical course is of the greatest value in preparing for the facility of operation and exactness of result, which is the final test of the navigator; for given the question of preparing a lad to be an excellent navigator in six years.

I believe the best authorities will agree with me to devote a portion of the period to the theory of navigation, and the remainder to the practice.

In our course we supplement theory with sufficient practice to illustrate the theory and to give certain facility in the use of instruments, but the principal practice should follow graduation, as it is only at sea that an experienced navigator can be made.

In conclusion, I claim that when the system fails, such failure is nearly always due to the fact that the graduate has neglected the practice of navigation after leaving the school.

Very respectfully,

J. A. HOWELL,
Commander, U. S. N., Head of Department.

Rear-Admiral C. R. P. RODGERS, U. S. N.,
Superintendent.

REPORT OF HEAD OF DEPARTMENT OF SEAMANSHIP.

UNITED STATES NAVAL ACADEMY,
DEPARTMENT OF SEAMANSHIP, &c.,
November 19, 1877.

ADMIRAL: Complying with your order of the 14th instant, I respectfully report the following as the course of instruction pursued in this department, and a statement of the professional importance of these studies:

During the first two years at the Academy the cadet-midshipmen make a practise-cruise of three months' duration, when they perform the duties of an enlisted man; they also perform the same duties at seamanship drill two or three times a week during the academic year, when the weather will permit. In the third year they are taught elementary seamanship, with the assistance of the practical drills, models, text-books, and lectures, and are prepared to exercise the duties of officer of the deck, petty officers, and seamen, upon their practice-cruise during the following summer, when they are carefully and patiently instructed as to the reasons and necessities of complying with the directions, as are considered the best, for the management and care of vessels.

They are also taught naval tactics during their third year, and this instruction is enforced by frequent drills with a fleet of cutters, fitted for that purpose.

During the fourth year the first class is instructed in the principles of handling a ship under all circumstances, and in preparing for and being able to properly meet the emergencies of a sea-life.

A short course is given in naval construction, for which the previous training in the mathematical department is essential to readily understand the calculations and formulas necessarily used in this important branch of study.

Attached to this department is an instructor in swimming, gymnastics, and boxing. Immediately after the cadets enter they are taught to swim; the following year they receive instructions in gymnastics, and during the remaining two years they are given frequent lessons in boxing.

The manner of signaling under all circumstances, with all kinds of contrivances, is thoroughly taught, and this is one of the several professional drills under the charge of this department.

To the naval officer, seamanship is the inherent adjunct of his profession. Its importance cannot be doubted in the course of instruction at a naval institution. It is carefully taught here, theoretically and practically, with the aim that when a cadet leaves the Academy he shall be a good "topman;" know how to heave the lead and steer; and shall have as thorough knowledge of the duties required of a naval officer as a graduate of any college has of the requirements of the profession he has been fitting himself to enter. It is only necessary for the cadet-midshipman to have, for a short time, the opportunity to practice that which he has been taught, to make him a competent officer.

It is unreasonable to expect a graduate to at once perform everything in his profession as well as those duties are discharged by men who have been years at this work. The young aspirant for the honors of the medical or legal professions may have graduated with high distinction, but he will find it difficult to persuade men to trust him with any case of importance until he has had some years of experience in actual practice. His distinguished honors at graduation amount to but little unless he continues his studious habits. He must be allowed some little time to develop and to apply his knowledge before he is judged as to his fitness to take rank with even the younger members of his corps.

Seamanship, at the Academy, is considered of paramount importance, and it is believed by those familiar with the course of instruction in this branch of study here that never, in our ships of war in active service, has the same amount of instruction been given to naval youth.

A person should know something of the strength and condition of his domicile, particularly when that habitation is a floating structure, tossed, strained, and knocked about by the violent winds and heavy seas which are to be met with at any time during the cruises of seagoing vessels.

The study of naval construction gives this important professional knowledge, and had it been more thoroughly understood, serious accidents with new vessels, where many lives have been lost, would have been avoided, and large sums of money saved, by constructing ships properly which have proved to be worthless by reason of not conforming to the easy rules and laws of naval architecture.

I am, sir, very respectfully, your obedient servant,

H. L. HOWISON,
Commander, U. S. N., Head of Department.

Rear-Admiral C. R. P. RODGERS, U. S. N.,
Superintendent.

REPORT OF HEAD OF DEPARTMENT OF ORDNANCE.

NAVAL ACADEMY, DEPARTMENT OF ORDNANCE, &c.,
November 16, 1877.

SIR: I have to acknowledge the receipt of order 139, and reply as follows:

Cadet-midshipmen come under instruction in the department of gunnery during the last two years of their course at the Academy in those classes which are called second and first.

Cadets of the second class are instructed in infantry and light artillery tactics, and in the naval-ordnance instructions.

It frequently becomes necessary to land seamen for service ashore, not only in war, but in peace also, owing to the unsettled condition of many countries visited by naval vessels. Our ships are supplied for such service both with infantry-equipments and light field-pieces. A knowledge of tactics, up to and including the handling of a battalion, is therefore a matter of practical necessity.

The ordnance-instruction book contains descriptions of the different guns, carriages, &c., in use in the Navy at the date of its publication, with the methods of handling and drilling the same; equipment of boats for every kind of military service on which they may be employed; magazine arrangements, and details of the construction and use of ordnance materials and implements.

Having been thus taught the merely practical part of this branch of their profession, with great part of which the men under their control will be as familiar as themselves, the following "first-class" year is given to teaching the mode and principles of making the various weapons, projectiles, and explosives with which they will have to deal. Beginning with the manufacture of gun-metals from the ore, the course embraces such subjects as casting, building, and inspecting guns; various systems of rifling; gun-carriages of many patterns; manufacture and testing of gunpowder; sighting guns; pointing in theory and practice, &c.

While the greater part of the text-book is devoted to our own system and methods, there is also mention, and in some cases description, of the inventions and methods of other nations. This is desirable in all countries, now that a general race is running in the enlargement of ordnance, improvement of methods, and invention of new appliances. It is the more necessary in our country because the United States, for economical reasons, has not engaged in this race.

There can, I think, be no question of the professional importance to naval officers of the instruction mentioned above.

Very respectfully,

A. T. MAHAN,
Commander, Head of Department of Gunnery.

Rear-Admiral C. R. P. RODGERS,
Superintendent Naval Academy.

REPORT OF HEAD OF DEPARTMENT OF PHYSICS, ETC.

NAVAL ACADEMY,
DEPARTMENT OF PHYSICS AND CHEMISTRY,
November 14, 1877.

ADMIRAL: In complying with your order No. 139, I have to remark—

1st. That the importance of any study to a naval officer depends upon the recognized need of the knowledge acquired by such study.

As there is a great diversity of opinion in the service as to what should constitute the acquirements of an officer, the reasons for pursuing a study which might be convincing to one might have no weight with another.

2d. All should accede to the general principle, that the more comprehensive and thorough an officer's education, the better is he fitted to perform his duties.

3d. Every branch of a naval officer's profession furnishes many illustrations of the application of science, and an officer will better comprehend the applications when he understands the scientific principles upon which they are based. It may not be absolutely necessary that an officer should understand the chemical and physical difference between the materials used in a cast-iron, wrought-iron, or steel gun; yet, I think, there can be no question that such knowledge will be serviceable many times.

4th. No academic course of study can possibly meet all the special cases which may arise during a professional career, and that course of study best attains its proper end which best fits the student to grapple with special cases as they arise. The testimony of those who have devoted their lives to educational affairs is that the easiest and quickest way to prepare a young man for a profession is to commence with a careful general training. It may at first seem indirect, yet the early culture insures rapid progress in the profession and its thorough mastery when commenced.

5th. While the Naval Academy is a technical school, it must not be overlooked that its students depend upon it for their mental training as well as their technical education.

Hence, the objects of the course in this department are to develop the cadet's powers of observation, and make him prompt and correct in interpreting the impression of his senses. As a student's interest in a study is increased when he comprehends that the knowledge acquired is to be put to actual use, every occasion is made use of to draw his attention to the bearing of his study upon his profession. Problems for illustration are selected with a special view to similar ones he will meet in practice.

In this way he is taught the theory, construction, and use of instruments he is required to use in his profession; as the thermometer, barometer, hygrometer, hydrometer, &c. He is taught the laws of flotation and conditions of equilibrium of floating bodies. He is taught the general principles of wave motion, as applicable to the propagation of sound and light. He is taught the theory and construction of the optical instruments he will be called upon to use; as the telescope, sextant, &c.

In electricity he is taught the theory and application of this agent to its various uses in the service, which are daily becoming more numerous. He is taught the theory of the construction of the compass, and the various sources of compass-error which exist in all ships, and especially in those made of iron or iron-clad.

In heat he is taught the theory of the pressure of gases and vapors, the theory of heat-engines, including the steam-engine, and the possible amount of energy that may be converted into useful work in the steam-engine.

In chemistry he is taught the philosophy of the science, together with the chemistry of common things; also, the chemistry of the manufacture of iron and steel, of gunpowder, gun-cotton, nitro-glycerine, dynamite, &c., and the various fulminates. Throughout the course the grand principle of the conservation of energy is constantly held up as a check and

guide. The metric or decimal system is principally used, to the end that the future officers may be prepared to readily take up any points of professional interest in foreign countries and communicate with facility with foreign officers and men of science.

The attainments required of a naval officer of the present day may be inferred from the character of the articles published in such periodicals as the Engineering, the Proceeding of the Royal United Service Institution, Proceedings of the Institution of Naval Architects, &c., many of which articles require, for a fair understanding of them, scientific knowledge of no mean character. The means of attack and defense in naval warfare are constantly becoming more and more complicated, and naval officers have, in the same proportion, more to learn to master their profession. He should be prepared by scientific training to adapt himself to the great and rapid changes that are liable at any moment to arise in his profession. If a naval engagement were to take place to-day between two modern fleets, the result might entirely revolutionize our ideas of naval warfare.

He who would be most prompt to appreciate the new condition of things, and adapt himself thereto, will be the best officer. Now, I think this readiness for the future is only to be secured by arming the graduates of this institution at all points by such scientific training as will best prepare them for any contingency.

Very respectfully,

W. T. SAMPSON,
Commander, Head of Department.

Rear-Admiral C. R. P. RODGERS, U. S. N.,
Superintendent United States Naval Academy.

REPORT OF HEAD OF DEPARTMENT OF STEAM-ENGINEERING.

NAVAL ACADEMY,
Annapolis, Md., November 20, 1877.

SIR: In obedience to your order No. 139, dated November 14, 1877, I have the honor to submit the following statement of the professional importance of the studies pursued in the department under my charge.

These studies relate to the designing, construction, management, and care of steam-engines and other machinery used in the naval service, and I conceive their importance to be commensurate with the importance of the part now performed by steam-engines in commerce and war.

So far as the studies relate to the *theory* of the steam-engine and of machines in general, they are necessary, because no adequate practical acquaintance with the subject can be had without them. And the theoretical studies are altogether ancillary to the practical instruction given the cadets. The practical instruction received by the cadet-midshipmen will be necessary to them in their future career in the Navy as commanding officers of ships provided with means of offense and defense, not the least of which is the motive-power, which failing, other means must likewise fail in consequence. That he who is to have absolute control of this power should have a good knowledge of the arts by which it is developed seems indisputable.

In the course of instruction of cadet-engineers in my department, by far the greatest part of the time is given to those arts upon which the practice of steam-engineering depends, and nothing is taught that is not absolutely necessary in these times to success in any of the branches of

engineering. Especially is this the case with regard to the needs of naval engineers, who must be able to plan machinery and ships, to superintend their construction, to take care of machinery on board ship, to manage it with economy and good judgment, and to make repairs with small means at command.

To this end they make drawings after the manner of industrial establishments, and they acquire in the workshops of the department proficiency in the use of implements and machine-tools of the smith, the boiler-maker, the machinist, molder, and pattern-maker.

It cannot be doubted that the skill and knowledge thus obtained will be of great use to them and to the service.

Both cadet-midshipmen and cadet-engineers are trained to operate steam-engines, to overhaul them, and dismantle and readjust them; the facilities for this sort of instruction being quite unrivaled in technological schools. The department possesses a pair of marine-engines, complete in all details and auxiliaries, with boilers for working and for illustration. After due preliminary instruction in familiar lectures, for which this apparatus serves as example and illustration, these engines are worked under steam by the cadets themselves, who are thus familiarized with the duties of the engine-room watch.

Similar exercises are had with engines on board a monitor, the motive-engines, as well as those provided for ventilation and the working of turrets and ground-tackle. They are also exercised in the use of engines in steam cutters and launches.

The cadets are all instructed in the methods of disconnecting the large marine-engines of the department, performing themselves the manual labor, and putting the separate parts together, in like manner.

That these young men should be able to enter upon their experience in the Navy possessing such fundamental knowledge of the arts they are to practice as it is practicable to impart to them here, must be a very great advantage, if only because much time will be saved for the study and observation they should give their minds to in actual service hereafter.

I am, sir, very respectfully, your obedient servant,

CHARLES H. BAKER,

Chief Engineer U. S. N., & Head of Department Steam-Engineering.

Rear-Admiral C. R. P. RODGERS, U. S. N.,

Superintendent United States Naval Academy.

REPORT OF HEAD OF DEPARTMENT OF MATHEMATICS.

UNITED STATES NAVAL ACADEMY,

Annapolis, Md., November 18, 1877.

ADMIRAL: In obedience to your order of November 14, I have the honor to submit the following statement as to the studies under my charge in the department of mathematics.

These studies are:

1. Algebra.
2. Geometry.
3. Trigonometry.
4. Descriptive geometry.
5. Analytical geometry, or conic sections.

After arithmetic, algebra and geometry form the foundation of all

mathematical attainments. Without some knowledge of these subjects no one can learn any other branch of mathematics.

Geometry furnishes a logical training which for two thousand years has been considered essential by every eminent educator. Its practical applications are numerous and well known, varying from such simple matters as gauging a water-tank or measuring the area of a sail to the three-point problem.

Some knowledge of geometry is necessary in the acquisition of any other branch of mathematics, and a thorough knowledge of spherical geometry is indispensable to the student of astronomy or navigation.

In general, the applications of algebra are not so direct. This branch may be regarded as the tool which the student uses in acquiring other subjects. As taught here, however, algebra includes the subject of logarithms, a good understanding of which is necessary to every engineer, surveyor, or navigator.

A knowledge of algebra and geometry, to a greater or less extent, is required in the following subjects, as now taught at the Naval Academy: Seamanship, gunnery, steam-engineering, naval construction, mechanics, astronomy, navigation, surveying, and physics.

Trigonometry is of great and direct professional importance in its application to navigation and surveying; besides this, it enters more or less into every mathematical subject which follows it.

Descriptive geometry has a direct professional application, inasmuch as it teaches various methods of projecting the sphere. It is necessary to the study of astronomy and navigation, and to naval construction and steam-engineering. It is a subject of the greatest importance to every constructing-engineer and to every person who may be called upon to make a working-drawing or to pass judgment upon one.

The course is a short one, covering less ground, I believe, than is taught at any other technical school in the country.

Analytical geometry is an extension of geometry, treated with the aid of algebra, and is useful in steam-engineering, in gunnery, in physics, and in naval construction; treating, as it does, of the conic sections, the curves in which all the celestial bodies move, a knowledge of it is necessary to the study of navigation and astronomy. It forms part (to use the words of Sir John Herschel) of that "sound and sufficient knowledge of mathematics, the great instrument of all exact inquiry, without which no man can ever make such advances in this or any other of the higher departments of science as can entitle him to form an independent opinion on any subject of discussion within their range."

Very respectfully,

W. W. HENDRICKSON,
Professor of Mathematics.

Rear-Admiral C. R. P. RODGERS, U. S. N.,
Superintendent United States Naval Academy.

REPORT OF HEAD OF DEPARTMENT OF MECHANICS AND APPLIED MATHEMATICS.

UNITED STATES NAVAL ACADEMY,
DEPARTMENT OF MECHANICS AND APPLIED MATHEMATICS,
Annapolis, Md., November 20, 1877.

SIR: The cadets begin the mathematical course of study in this department at the commencement of the second-class year. The subjects

taught are theoretical and applied mechanics, and the differential and integral calculus; the cadet-engineers have also a course in "the strength of materials."

Experience has shown that the present required course of study in this department, while sufficiently extensive to be of great service to the cadets, is not too difficult for any industrious student who has completed the required mathematical course for the third and fourth classes.

There is at present an elective course in the integral calculus and in analytical mechanics, supplementary to the elective course in the department of mathematics.

The time spent at this Academy by the cadets does not permit the introduction of studies whose sole object is the discipline and cultivation of the intellectual powers, however desirable this may be. It seems, therefore, proper that the reasons for the presence in the academic course of certain branches of study should be assigned.

The applications of mechanics are so numerous and important in connection with the naval officer's profession that few will question the utility of this branch, which constitutes the medium through which the practical applications of mathematics are mostly made.

Experience, both here and elsewhere, has shown that the shortest, easiest, and only satisfactory road to this branch of study is through the calculus, since the extra labor involved in comprehending the cumbersome methods adopted in attempting to avoid the use of the calculus fully suffices for the acquirement of a fair knowledge of this subject.

Many important mechanical problems are, however, so dependent upon the calculus that without it they cannot be mastered at all. For example, determining the centers of gravity and moments of inertia of many regular solids; the theory of the strength of beams; the motion of projectiles in air; also many problems relating to hydrostatics, astronomy, and navigation.

It is of the utmost importance that at least a portion of the officers of the United States Navy shall be qualified to keep themselves fully informed as to the professional papers published abroad. As an illustration of the absolute necessity of a knowledge of the calculus for this purpose, it is sufficient to remark that the number of Naval Science (a quarterly published in London) for January, 1875, contains thirteen articles on strictly professional subjects; of these four are beyond the comprehension of a person not familiar with the calculus. The number of the same journal for July, 1874, contains nine articles, of which five involve the calculus. Other examples might easily be cited.

I am, sir, very respectfully, your obedient servant,

J. M. RICE,
Professor of Mathematics, U. S. N.,
Head of Dept. Mechanics, &c.

Rear-Admiral C. R. P. RODGERS, U. S. N.,
Superintendent Naval Academy.

REPORT OF HEAD OF DEPARTMENT OF ENGLISH STUDIES, ETC.

UNITED STATES NAVAL ACADEMY,
DEPARTMENT OF ENGLISH STUDIES, HISTORY, AND LAW,
November 16, 1877.

SIR: Of the subjects taught in the department of English studies, history, and law, the course in English studies includes as much of the elementary branches as is necessary to supply the great defects in the

early training of cadets. Beyond this, students become familiar with the rules for composition, and have practical work in writing official reports and papers on designated subjects. This training, important as it is for all men in official positions, is peculiarly so for naval officers, whose official communications are stamped with a permanent character and become a part of the archives of the government. The composition of reports and dispatches demands accuracy, clearness, and facility of expression, which, except in rare instances, can only be acquired by careful training.

The course in history comprises a brief sketch of general European history, a more detailed study of the history and constitution of the United States, and a special course in naval history. The first is necessary to enable officers to understand the relations of the governments whose officers and representatives they meet, and to maintain relations with such foreign officials on an equal footing of intelligent and enlightened intercourse. With regard to the second, it is obviously essential that those destined to occupy a high official position should be acquainted with the character and organization of the government they serve; and he could hardly be considered an accomplished officer who was not well versed in the history and institutions of his own country. The third branch of the subject, which comprises the history of the naval service, with its record of great achievements in the past, is a stimulus to renewed effort in the future. It gathers together and gives permanent form to the traditions of the service, and presents a series of bright examples of professional worth and devotion to duty to be followed and emulated by succeeding generations of officers.

A knowledge of the rules of international law is absolutely necessary to naval officers. Cases frequently arise, in peace as well as in war, where an officer is called upon to make a direct and immediate application of some of these rules, and where his action may be of great moment. Ignorance of this subject may lead to mistakes involving most serious consequences, so serious even as to lead to an unexpected and disastrous war.

Every precaution should be taken to prevent the possibility of such mistakes, and this can only be accomplished with certainty by systematic preliminary instruction in the subject.

Very respectfully,

J. R. SOLEY,
Professor, U. S. N., Head of Department.

Rear-Admiral C. R. P. RODGERS, *U. S. N,*
Superintendent United States Naval Academy.

REPORT OF HEAD OF DEPARTMENT OF MODERN LANGUAGES.

UNITED STATES NAVAL ACADEMY,
DEPARTMENT OF MODERN LANGUAGES,
November 16, 1877.

SIR: In obedience to Order 139, I respectfully submit for your consideration a statement of my views as to the importance of the studies under my charge.

As an agent of the government, the naval officer, more than any other, must have an excellent knowledge of French, not merely because it is an accomplishment, but because it is becoming daily more indispensable to him.

It is the acknowledged diplomatic language of Europe. It is also very extensively used in commercial, scientific, and literary intercourse. There are many books most valuable to the naval officer in the study of his profession that are closed to him unless he be proficient in that language, because many French works are not *translated*, and important publications of other countries of the European continent are translated in the French only. As to the Spanish, the United States has near it many Spanish-speaking countries, Mexico, Cuba, and the South American republics, and it is very important that our naval officers, who are often called to act promptly upon these coasts, should understand and speak the language of those countries.

Very respectfully, your obedient servant,

L. F. PRUD'HOMME,
Professor, Head of Department.

Rear-Admiral C. R. P. RODGERS,
Superintendent United States Naval Academy.

REPORT OF HEAD OF DEPARTMENT OF DRAWING.

UNITED STATES NAVAL ACADEMY,
Annapolis, Md., November 15, 1877.

SIR: I have the honor to acknowledge your order No. 139, under date of November 14, in which you direct that heads of departments shall, as soon as possible, present a statement setting forth the professional importance of the studies under their charge to naval officers.

As head of the department of drawing, having under my direction the teaching of cadet-midshipmen in practical perspective, free-hand drawing from objects immediately connected with the duties of naval officers, as guns with their carriages, hulls of ships, knots, rigging, timbering, &c., and having also under my charge the teaching of topographical and chart drawing, I beg leave to state that drawing, as taught at the United States Naval Academy, is of immediate importance to cadet-midshipmen while in the school, inasmuch as it materially assists them in the acquisition of knowledge in the professional branches, seamanship and gunnery. The course in topographical and chart drawing is of practical importance to the naval officer in fitting him to record and report the results of surveys and to do the various kinds of hydrographic work required by the public service. Officers are frequently called on to report on the approaches to the coast, bearings, entrances to harbors, &c., and it is often required that sketches of headlands and coasts should accompany such reports. The safety of ships depends on the clearness and accuracy of such illustrated reports, and a good knowledge of drawing is indispensable to insure this clearness and accuracy.

Very respectfully,

MARSHALL OLIVER,
Professor, Head of Department of Drawing.

Rear-Admiral C. R. P. RODGERS, U. S. N.,
Superintendent.

Estimates of appropriations required for the service of the fiscal year ending June 30, 1879, by the Naval Academy.

Detailed object of expenditure, and explanation.	Estimated amount which will be required for each detailed object of expenditure.
NAVAL ACADEMY.	
Pay Naval Academy:	
One professor of drawing, head of department	$2,500 00
One professor of modern languages, head of department	2,500 00
Three professors, viz: one of physics, one of chemistry, and one of Spanish, at $2,200 each	6,600 00
Seven assistant professors, viz: four of French, two of English studies, history, and law, one of drawing, at $1,800 each	12,600 00
Sword-master, at $1,500, and two assistants, at $1,000 each	3,500 00
Boxing-master and gymnast	1,200 00
Assistant librarian	1,400 00
Three clerks to Superintendent, at $1,200, $1,000, and $800 each	3,000 00
One clerk to commandant of cadets	1,000 00
One clerk to audit cadets' accounts	1,000 00
One apothecary	750 00
One baker	600 00
One mess-man, at $288; one cook, at $325.50; and messenger to Superintendent, at $600	1,213 50
One armorer, at $529.50; gunner's mate, at $469.50; and quarter gunner, at $409.50	1,408 50
One coxswain for gymnasium, at $469.50; one seaman in department of seamanship, at $349.50; one seaman in department of astronomy, &c., at $349.50; one seaman in department of physiology and chemistry, at $349.50	1,518 00
One band-master, at $528, and 21 first-class musicians, at $348 each	7,836 00
Seven second-class musicians, at $300 each	2,100 00
	50,725 00
Amount appropriated under this head, "pay of professors and others," for the year ending 30th June, 1878	50,118 00
	*608 00
Pay of watchmen and others:	
Captain of the watch, at $2.50 per diem	912 50
Four watchmen, at $2.25 per diem, each	3,285 00
Foreman of the gas and steam-heating works of the Academy, at $5 per diem	1,825 00
Ten attendants of gas and steam-heating works: one at $3.50; one at $3; and eight at $2.50 per diem each	9,672 00
One steam-pipe fitter	547 00
Three joiners, two painters, and two masons, at $3.50 per diem each	8,942 50
One tinner, one gas-fitter, and one blacksmith, at $3.50 per diem each	3,832 50
	29,016 50
Amount appropriated for the year ending June 30, 1878	29,016 50
Pay of mechanics and others:	
One mechanic at workshop, at $2.25 per diem	821 25
One master laborer to keep public grounds in order, at $2.28 per diem	832 20
Fourteen laborers to assist in the same: three at $2, and eleven at $1.75 per diem each	9,216 25
One laborer to superintend quarters of cadets, public grounds, &c., at $2.28 per diem	832 20

*This excess is occasioned by the addition of one baker (at $600) for the cadets' mess.

Estimates of appropriations required, &c.—Continued.

Detailed object of expenditure, and explanation.	Estimated amount which will be required for each detailed object of expenditure.
Six attendants: one at chapel, one at recitation hall, one at offices, one at library, one at paymaster's office, and one at store, at $20 per month each	$1,440 00
Twenty servants to keep in order and attend to cadets' quarters, public buildings, &c., at $20 per month each	4,800 00
	17,941 90
Amount appropriated for the year ending June 30, 1878	17,701 90
Excess	*240 00
Pay in department of steam-engineering:	
One machinist, at $3.50 per diem	1,277 50
One machinist, at $3 per diem	1,095 00
One blacksmith, at $3.50 per diem	1,277 50
One boiler-maker, at $3.50 per diem	1,277 50
One pattern-maker, at $3.50 per diem	1,277 50
One molder, at $3.50 per diem	1,277 50
Two laborers, at $1.75 per diem each	1,277 50
	8,760 00
Appropriated for year ending June 30, 1878	8,760 00
REPAIRS AND IMPROVEMENTS.	
For the necessary repairs of public buildings, pavements, wharves, and walls inclosing the grounds of the Naval Academy; for improvements of the same, and for furniture, fixtures, &c.	21,000 00
Appropriated for year ending June 30, 1878	21,000 00
Heating and lighting:	
For fuel for heating and lighting the Academy and school-ships	17,000 00
Appropriated for the year ending June 30, 1878	18,000 00
Decrease	1,000 00
GENERAL MAINTENANCE, NAVAL ACADEMY.	
For the purchase of books for the library	2,000 00
For stationery, blank-books, models, maps, &c., and for text-books for the use of instructors	2,000 00
For the expenses of the Board of Visitors	2,600 00
For the purchase of chemicals, apparatus, and instruments in the department of physics and chemistry, and for repairs of the same	5,000 00
For the purchase of gas and steam machinery, steam-pipe and fixtures, rent of buildings for the use of the Academy, freight, cartage, water, music, music and astronomical instruments, uniforms for the bandmen, telegraphing, and for the feed and maintenance of teams, and for the current expenses and repairs of all kinds, and for incidental labor and expenses not applicable to any other appropriation	34,600 00
For stores in the department of steam-engineering	800 00
For materials for repairs in steam-machinery	1,000 00
	48,000 00
Appropriated for the year ending June 30, 1878	45,500 00
Excess	†2,500 00

*This excess is occasioned by one additional attendant to offices, &c.

† This excess is occasioned by an increase of $2,500 necessary for the purchase of chemicals and apparatus for use in the department of physics and chemistry.

RECAPITULATION.

Pay of professors and others	$50,718 00
Pay of watchmen and others	29,016 50
Pay of mechanics and others	17,941 90
Pay in department of steam-engineering	8,760 00
Repairs and improvements	21,000 00
Heating and lighting	17,000 00
General maintenance	48,000 00
Amount estimated for	192,436 40
Appropriated for year ending June 30, 1878	190,096 40
Excess	2,340 00

Respectfully submitted.

C. R. P. RODGERS,
Rear-Admiral, Superintendent.

Hon. R. W. THOMPSON,
Secretary of the Navy, Navy Department, Washington, D. C.

No. 3.—BUREAU OF YARDS AND DOCKS.

BUREAU OF YARDS AND DOCKS,
NAVY DEPARTMENT,
Washington, D. C., October 13, 1877.

SIR: In compliance with your order of the 10th instant, I have the honor to submit my annual report for the fiscal year ending 30th June, 1877, and estimates for the fiscal year ending 30th June, 1879, together with an abstract of offers for supplies coming under the cognizance of the Bureau of Yards and Docks for the fiscal year ending June, 1877.

Very respectfully, your obedient servant,

J. C. HOWELL,
Chief of Bureau.

Hon. R. W. THOMPSON,
Secretary of the Navy, Navy Department, Washington, D. C.

BUREAU OF YARDS AND DOCKS, NAVY DEPARTMENT,
Washington, D. C., September 29, 1877.

SIR: I have the honor to submit herewith the annual report of the operations at the several navy-yards and stations, under the cognizance of this bureau, during the fiscal year ending 30th June, 1877, together with the estimates for improvements and repairs for the fiscal year ending 30th June, 1879.

At the old navy-yards upon the Atlantic coast nothing has been done in the way of permanent improvements, the small inadequate appropriations sufficing merely to keep them in temporary repair.

At League Island, work is nearly finished upon the large steam-engineering building; the temporary wharf at the foot of Broad street has been extended to the line of twenty-one feet of water; the foundations for officers' quarters and commandant's office have been laid; a new watch-house has been built; and the mold-loft building will shortly be completed. About thirty-four acres in all have been filled in by the

American Dredging Company, under contract, and of this area about seven and a fourth acres were filled in during the past fiscal year. A causeway across the back channel has been built; plank roads laid; and a space near the commandant's office has been graded and sodded. The whole amount from the sale of the Philadelphia navy-yard, allotted by the late Secretary of the Navy to the Bureau of Yards and Docks, will have been expended by December 1, a large majority of the expenditure having been made under contracts.

At Mare Island, the appropriation for the dry-dock was only sufficient to keep so much of the dock as has been finished in condition, and to lay a small portion of granite.

I beg leave to invite your special attention to the amount asked for the continuance of the work upon the stone dry-dock at Mare Island; not a dollar was appropriated for this important work for the present fiscal year.

The necessity for a stone dry-dock at Mare Island has been recently made painfully apparent by the accident which happened to the wooden dry-dock at that navy-yard, while a man-of-war of a friendly nation was being raised. That no lives were lost upon this occasion was a matter of surprise and congratulation. Fourteen thousand dollars were needed to repair damage done to the dock.

In our eight navy-yards we have but three stone dry-docks. A single private ship-yard in England has five of solid masonry; and at Spezia, the Kingdom of Italy has in successful operation one of the greatest and most thoroughly appointed dock-yards in existence, containing an immense wet basin capable of floating the largest ship, and five or six dry-docks, which are to be increased to ten in number.

Reports from Rear-Admiral Rodgers, lately commanding at Mare Island, show a great decrease in the depth of water at the docks at that yard.

The sum asked for dredging purposes I believe to be absolutely necessary, if the yard is to be kept in working condition.

I beg to reiterate, that in my judgment the necessity for commencing the building of a permanent wharf and repairing-basin at League Island is imperative.

The yard will be comparatively useless for fitting out or repairing vessels of war until these much needed improvements shall be made.

Estimates for beginning this work will be found under the proper heading.

Railroads in navy-yards are great economizers of time and expense.

The maintenance of teams, carts, and wheels forms one of the largest items of expenditure under appropriation maintenance.

I respectfully recommend that an appropriation be asked for to increase the number of railways at Boston, New York, and Norfolk.

Our navy-yards, from inadequate appropriations, have been rapidly deteriorating during the past two years.

It would be far better that one great navy-yard should be kept in a high state of efficiency, ready for any work which might be required, than that eight should be kept open at a large expense, with half their workshops shut up and gradually going to decay for want of the necessary means to make needed reparations.

The whole sum, $100,000, appropriated for 1876–'77 could have been judiciously expended upon the New York navy-yard alone for repairs of workshops, walls, docks, and crib-work.

The bureau has been ably assisted by the commandants of the different yards and stations in making the best possible use of the small ap-

propriation for repairs and preservation; but many wharves, workshops, docks, &c., have been merely temporarily patched up, where a wise economy called for radical repairs.

In preparing the estimates, I have endeavored, to the best of my judgment, to recommend such objects only as seemed to me of the first importance to the welfare of the naval service.

PORTSMOUTH, N. H.

The utmost economy has been exercised in the expenditures of the very limited amount which was alloted to this yard under the head of "repairs and preservation." Care has been taken to make such repairs as were of most pressing and urgent necessity so far as funds would permit, but many others have been omitted or have received but temporary attention.

There has been expended at this yard, under the head of appropriation "repairs and preservation," during the fiscal year ending 30th June, 1877—

For materials	$3,306 56	
For labor	10,661 88	
		$13,968 44

The amount expended under the head of "general maintenance" is—

For materials	6,855 02	
For labor	28,428 83	
		35,283 85
The amount expended under head of "civil establishment" is		1,953 00
Making a total expenditure of		51,205 29

The estimates submitted by the authorities at this yard for the fiscal year ending 30th June, 1879, are—

For works of improvement	$78,500 96
For repairs and preservation	49,500 00
For general maintenance	69,725 00
For civil establishment	5,900 00
Making an aggregate of	203,625 96

BOSTON, MASS.

The expenditures made during the past year under head of "repairs and preservation," were for the necessary repairs of the existing buildings, docks, wharves, &c., and these have received such repairs as the small amount allotted for the purpose would admit of; many other repairs are needed, which must be deferred for further appropriations. The amount expended under this head during the fiscal year ending 30th June, 1877, is—

For materials	$2,892 47	
For labor	14,873 95	
		$17,766 42

The amount expended under head of "general maintenance" is—

For materials	$12,002 48	
For labor	41,081 93	
		53,084 41
The amount expended under head of "civil establishment" is		3,255 00
Making a total expenditure of		74,105 83

The estimates submitted by the authorities at the yard for "new improvements," "repairs and preservation," "general maintenance," and "civil establishment," for the fiscal year ending June 30, 1879, are—

New improvements	$195,096 86
Repairs and preservation	114,500 00
General maintenance	105,000 00
Civil establishment	7,264 50
Total estimates	421,861 36

NEW LONDON.

At this yard there has been expended during the past fiscal year, under appropriation "navy-yard, New London":

For materials	$159 03	
For labor	4,793 41	
		$4,952 44

The amount expended under head of "repairs and preservation" is—

For materials	$19 25	
For labor	432 15	
		451 40

The amount expended under "general maintenance" is—

For materials	$343 90	
For labor	4,758 58	
		5,102 48
Total expenditure		10,506 32

The estimates submitted by the yard authorities for "new improvements," "repairs and preservation," "general maintenance," and "civil establishment," for the fiscal year ending June 30, 1879, are—

For new improvements	$437,500 00
For repairs and preservation	2,550 00
For general maintenance	30,064 00
For civil establishment	6,800 00
Total estimates	476,914 00

NEW YORK.

During the fiscal year ending June 30, 1877, there was expended at this yard, under appropriation "repairs and preservation":

For materials	$3,308 51	
For labor	15,207 02	
		$18,515 53

The amount expended under head of "general maintenance" is—

For materials	$15,416 97	
For labor	82,069 00	
		97,485 97
The amount expended under "civil establishment" is		3,248 40

The amount expended under "contingent" is—

For materials	$414 20	
For labor	1,567 37	
		1,981 57
Total expenditures		121,231 47

The estimates submitted by the yard authorities for "new improvements," "repairs and preservation," "general maintenance," and "civil establishment," for the fiscal year ending June 30, 1879:

For new improvements	$512,950 90
For repairs and preservation	132,000 00
For general maintenance	155,000 00
For civil establishment	7,097 25
Total estimates	807,048 15

LEAGUE ISLAND.

The amount expended at this yard, under "improvements," during the fiscal year ending June 30, 1877, is—

For materials	$32,800 23	
For labor	249,996 08	
		$282,796 31

There has been expended under the head of "repairs and preservation"—

For materials	3,860 91

The amount expended under head of general "maintenance" is—

For materials	$39,409 89	
For labor	9,911 27	
		49,321 16
The amount expended under "civil establishment" is		3,394 12
The amount expended under "contingent" is		2,400 00
Total expenditures		341,772 50

The estimates submitted by the authorities of the yard for "new improvements," "repairs and preservation," "general maintenance," and "civil establishment," for the fiscal year ending 30th June, 1879, are—

For new improvements	$1,600,000 00
For repairs and preservation	50,000 00
For general maintenance	81,000 00
For civil establishment	7,600 00
Total estimates	1,738,600 00

WASHINGTON, D. C.

The expenditures under the head of "repairs and preservation," during the fiscal year ending 30th June, 1877, are—

For materials	$5,509 86	
For labor	6,168 45	
		$11,678 31

The amount expended under head of "general maintenance" is—

For materials	$14,438 03	
For labor	39,895 09	
		54,333 12
The amount expended under "civil establishment" is		1,657 00
The amount expended under "contingent" is		1,000 00
Total expenditure		68,668 43

The estimates submitted by the authorities of the yard for "new improvements," "repairs and preservation," "general maintenance," and "civil establishment," for the fiscal year ending 30th June, 1879, are—

For new improvements	$12,604 70
For repairs and preservation	173,679 00
For general maintenance	70,300 00
For civil establishment	5,600 00
Total estimates	

NORFOLK, VA.

The expenditures under the head of "repairs and preservation," during the fiscal year ending 30th June, 1877, are—

For materials	$5,392 03	
For labor	7,847 13	
		$12,879 16

The amount expended under general "maintenance" is—

For materials	9,547 26	
For labor	44,050 39	
		53,597 65
The amount expended under "civil establishment" is		2,871 75
The amount expended under "contingent" is		758 17
Total expenditure		70,106 73

The estimates submitted by the authorities of the yard for "new improvements," "repairs and preservation," "general maintenance," and "civil establishment," for the fiscal year ending 30th June, 1879, are—

For new improvements	$370,679 16
For repairs and preservation	123,076 83
For general maintenance	87,596 27
For civil establishment	6,856 25
Total estimates	588,208 51

PENSACOLA, FLA.

The amount expended on new improvements during the fiscal year ending 30th June, 1877, is	$211,680 00

There has been expended under the head of "repairs and preservation"—

For materials	$2,178 78	
For labor	4,877 20	
		7,055 98

The amount expended under head of "general maintenance" is—

For materials	$4,874 44	
For labor	21,866 80	
		26,741 24
The amount expended under "civil establishment" is		1,046 25
Total expenditure		246,523 47

The estimates submitted by the authorities of the yard for "new improvements," "repairs and preservation," "general maintenance," and "civil establishment," for the fiscal year ending 30th June, 1879:

For new improvements	$81,440 10
For repairs and preservation	111,075 09
For general maintenance	70,258 50
For civil establishment	5,600 00
Total estimates	268,373 69

MARE ISLAND, CAL.

The amount expended for "new improvements" during the fiscal year ending 30th June, 1877, was—

For materials	$3,391 57	
For labor	35,517 14	
		$38,908 71

The amount expended under "repairs and preservation" is—

For materials	$3,201 31	
For labor	16,798 46	
		$19,999 77

The amount expended under "general maintenance" is—

For materials	$15,721 47	
For labor	46,172 04	
		61,893 51
The amount expended under "civil establishment" is		3,141 00
The amount expended under head of "contingent" is		13,000 00
Total expenditure		136,942 99

The estimates submitted by the authorities of the yard for "new improvements," "repairs and preservation," "general maintenance," and "civil establishment," for the fiscal year ending 30th June, 1879, are—

For new improvements	$1,637,250 49
For repairs and preservation	174,000 00
For general maintenance	117,560 00
For civil establishment	9,200 00
Total estimates	1,938,010 49

SACKET'S HARBOR.

The amount expended at this station, under the head of "general maintenance," during the fiscal year ending 30th June, 1877, is $802.85; the amount estimated for repairs and preservation during the fiscal year ending 30th June, 1879, is $2,000.

KEY WEST, FLA.

The amount expended, under the head of "repairs and preservation," during the fiscal year ending 30th June, 1877, is—

For material	$3,775 39	
For labor	2,393 97	
		$6,169 36
The amount expended under "general maintenance" is		1,135 20
Total expenditure		7,304 56

The estimates submitted by the authorities of the station, for "repairs and preservation," and for "general maintenance," for the fiscal year ending 30th June, 1879, are—

For repairs and preservation	$13,600 00
For general maintenance	1,605 00
Total estimates	15,205 00

NAVAL ASYLUM.

There were, on the 1st July, 1876, 11 officers, 28 attendants, and 130 beneficiaries borne on the rolls of the asylum. During the fiscal year ending 30th June, 1877, thirty-six beneficiaries have been admitted; 13 have died; 6 were discharged; 3 left at their own request, and 1 was sent to the Government Asylum for the Insane.

During the past fiscal year proper care and attention has been devoted to the comfort and welfare of the beneficiaries, and, as a general rule, they conduct themselves with propriety, and appear contented

and grateful for the provision made by the government for their support. Cases of insubordination occur occasionally, but these are soon suppressed by a rigid enforcement of the regulations of the institution.

The expenses of the institution during the past year are:

For subsistence	$18,260 70¼
For clothing, tobacco, &c	12,353 21
For attendants	7,636 10
For repairs, care of grounds, &c	5,968 93
For miscellaneous items	8,609 99
Total expenditures	52,828 93¼

Estimates have been submitted by the governor of the institution for its support during the fiscal year ending 30th June, 1879, amounting to $77,990.00.

No. 1.—*Report of expenditures at navy-yards, stations, and Naval Asylum, for fiscal year ending June* 30, 1877.

Yards and stations.	Appropriations.					
	Yard improvements.	Repairs and preservation.	General maintenance.	Civil establishment.	Contingent.	Total.
Portsmouth, N. H		$13,968 44	$35,283 85	$1,953 00		$51,205 29
Boston, Mass		17,766 42	53,084 41	3,255 00		74,105 83
New London, Conn	$4,952 44	451 40	5,102 48			10,506 32
New York, N. Y		18,515 53	97,485 97	3,248 40	$1,981 57	121,231 47
League Island, Pa	282,796 31	3,860 91	49,321 16	3,394 12	2,400 00	341,772 50
Washington, D. C		11,678 31	54,333 12	1,657 00	1,000 00	68,668 43
Norfolk, Va		12,879 16	53,597 65	2,871 75	758 17	70,106 73
Pensacola, Fla	211,680 00	7,055 98	26,741 24	1,046 25		246,523 47
Mare Island, Cal	38,908 71	19,999 77	61,893 51	3,141 00	13,000 00	136,942 99
Sacket's Harbor			802 85			802 85
Key West, Fla		6,169 36	1,135 20			7,304 56
Naval Asylum	52,828 93					52,828 93
Wharf at Erie					500 00	500 00
Total	591,166 39	112,345 28	438,781 44	20,566 52	19,639 74	1,182,499 37

No. 2.—*Detailed report from navy-yards and stations of expenditures under repairs and preservation, during the fiscal year ending June 30, 1877.*

Objects.	Portsmouth, N. H.	Boston, Mass.	New London, Conn.	New York, N. Y.	League Island, Pa.	Washington, D. C.	Norfolk, Va.	Pensacola, Fla.	Mare Island, Cal.	Key West, Fla.	Total.
Yard buildings	$7,936 44	$7,131 53	$42 61	$4,362 81	$1,163 69	$7,757 25	$2,246 72	$1,344 24	$5,838 94	$1,085 65	$38,909 88
Officers' quarters	1,477 09	1,889 80	252 58	3,021 63	665 99	228 65	2,397 08	722 20	4,684 92	.....	15,339 94
Wharves, landings, bridges, and boats	835 68	326 87	11 44	2,056 23	137 03	44 98	2,573 97	3,074 05	2,385 36	4,642 26	16,087 87
Roads, walks, gutters, and drains	685 22	4,031 02	59 16	2,725 84	1,112 30	790 91	680 23	942 00	1,950 52	.....	12,977 20
Fences and walls	156 18	72 00	23 49	1,050 62	1 40	430 98	572 44	253 97	1,450 44	340 20	4,351 72
Cranes, scows, and derricks	353 91	.....	.....	982 54	365 14	1,546 22	135 37	.....	215 80	.....	3,598 98
Furnaces, forges, heating apparatus, &c	770 95	675 57	18 62	1,852 57	129 50	99 60	432 61	90 63	770 19	.....	4,840 24
Tracks and scales	29 24	77 25	.....	96 70	107 14	163 42	3 00	.....	39 60	.....	516 35
Water and gas works	753 02	2,341 52	.....	1,361 86	79 79	229 53	1,581 62	.....	1,638 31	.....	7,985 65
Dredging and scowing	.....	753 48	.....	785 90	.....	305 09	886 66	.....	7 89	.....	2,739 02
Dry docks	919 95	402 75	.....	13 43	16 84	.....	195 44	.....	.....	.....	1,548 41
Miscellaneous repairs	50 76	64 63	43 50	205 40	82 09	81 68	1,174 02	628 89	1,017 80	101 25	3,450 02
Total	13,968 44	17,766 42	451 40	18,515 53	3,860 91	11,678 31	12,879 16	7,055 98	19,999 77	6,169 36	112,345 28

No. 3.—*Detailed report of expenditures, under general maintenance, received from yards and stations during the fiscal year ending June* 30, 1877.

Objects.	Portsmouth, N. H.	Boston, Mass.	New London, Conn.	New York, N. Y.	League Island, Pa.	Washington, D. C.	Norfolk, Va.	Pensacola, Fla.	Mare Island, Cal.	Sacketts Harbor, N. Y.	Key West, Fla.	Total.
Freights and transportation	$3 75	$2 90	$61 03	$187 20	$6 25	$2 50	$1 90	$10 00	$6,912 23	.....	.....	$7,187 76
Printing, stationery, and advertising	155 14	64 35	.....	1,522 07	1,997 82	1,452 23	944 30	296 40	1,109 36	.....	.....	7,541 67
Books, maps, models, and drawings	.....	29 50	.....	1,117 00	370 70	29 08	354 00	.....	2,166 21	.....	.....	4,066 49
Purchase and repair of fire-engines	1,019 41	1,105 00	.....	334 49	281 84	1,225 64	318 89	1,460 90	1,553 36	.....	.....	7,299 53
Machinery of every description and patent-rights	75 00	9 53	.....	113 45	2,249 85	2,525 94	304 38	376 63	4,031 95	.....	.....	9,686 73
Repairs on steam-engines and attendance on same	.....	1,320 45	.....	2,221 82	536 34	.....	1,932 23	779 03	2,367 36	.....	.....	9,157 23
Purchase and maintenance of oxen and horses, pay of hired teams, &c	5,609 11	8,441 26	94 15	11,091 13	9,710 94	2,997 50	9,530 16	2,907 21	9,273 38	.....	.....	59,654 84
Carts, timber, wheels, and tools of every description	1,938 08	2,320 64	47 30	3,114 15	1,399 99	1,450 71	7,088 34	919 55	2,183 60	.....	.....	20,462 36
Postage on letters on public service and telegrams	45 24	157 87	4 00	92 90	410 56	35 95	109 73	900 00	14 52	.....	.....	1,770 77
Furniture for government houses and offices in navy-yards	2,475 60	225 37	.....	2,474 50	72 77	1 114 22	2,307 29	185 25	1,934 33	.....	.....	10,789 33
Coal and other fuel for yards and docks purposes	2,200 97	1,729 95	162 75	1,330 64	1,939 90	2,855 69	961 81	943 75	1,955 25	.....	.....	14,0>0 71
Candles, oil, and gas	2,352 28	2,298 62	.....	3,461 25	397 57	1,455 75	2,763 47	670 04	6,577 52	.....	.....	19,976 50
Clearing and cleaning up yard and care of buildings	4,499 66	5,715 14	1,015 84	8,293 29	2,227 58	18,093 90	6,061 65	7,887 67	3,878 37	.....	.....	57,673 10
Attendance on fires, lights, fire-engines, and apparatus	3,206 92	3,675 66	.....	7,196 10	8,240 98	2,316 50	3,906 76	563 56	1,642 22	.....	.....	30,748 70
Incidental labor not chargeable to other appropriations	4,821 57	1,185 80	1,400 00	17,106 20	5,863 83	7,367 02	3,821 89	977 40	5,063 74	$802 85	$40 20	48,450 50
Water-tax	100 00	4,456 07	62 04	4,471 38	.....	.....	22 20	173 85	5,381 05	.....	.....	14,666 59
Tolls and ferriages	23 63	.....	44 60	182 50	.....	.....	337 51	.....	2,981 56	.....	.....	3,569 80
Pay of watchmen	6,642 54	20,298 00	2,210 77	33,135 90	13,535 64	11,333 00	12,706 22	7,620 00	2,797 22	.....	1,095 00	111,374 29
Flags, awnings, and packing-boxes	114 95	48 30	.....	40 00	78 60	77 49	124 92	70 00	70 28	.....	.....	*624 54
Rent of landing	.....	.....	.....	.....	.....	.....	.....	.....	.....	.....	.....	.....
Total	35,283 85	53,084 41	5,102 48	97,485 97	49,321 16	54,333 12	53,097 65	26,741 24	61,893 51	802 85	1,135 20	438,781 44

No. 4.—*Estimates received from navy yards, stations, and Naval Asylum, for fiscal year ending June* 30, 1879.

Yards and stations.	Appropriations.				Total.
	Yard improvements.	Repairs and preservation.	General maintenance.	Civil establishment.	
Portsmouth	$78,500 96	$49,500 00	$69,725 00	$5,900 00	$203,625 96
Boston	195,096 86	114,500 00	105,000 00	7,264 50	421,861 36
New London	437,500 00	2,550 00	30,064 00	6,800 00	476,914 00
New York	512,950 90	132,000 00	155,000 00	7,097 25	807,048 15
League Island	1,600,000 00	50,000 00	81,000 00	7,600 00	1,738,600 00
Washington	12,604 70	173,679 00	70,300 00	5,600 00	262,183 70
Norfolk	370,679 16	123,076 83	87,596 27	6,856 25	588,208 51
Pensacola	81,440 10	111,075 09	70,258 50	5,600 00	268,373 69
Mare Island	1,637,250 49	174,000 00	117,560 00	9,200 00	1,938,010 49
Sacketts Harbor	.....	2,000 00	.....	.....	2,000 00
Key West	.....	13,600 00	1,605 00	.....	15,205 00
Naval Asylum	77,990 00	.....	.....	.....	77,990 00
Total	5,004,013 17	945,980 92	788,108 77	61,918 00	6,800,020 86

No. 5.—*Detailed estimates from navy yards and stations, for repairs and preservation, for the fiscal year ending June* 30, 1879.

Objects.	Portsmouth, N. H.	Boston, Mass.	New London, Conn.	New York, N. Y.	League Island, Pa.	Washington, D. C.	Norfolk, Va.	Pensacola, Fla.	Mare Island, Cal.	Sacket's Harbor, N. Y.	Key West, Fla.	Total.
Yard buildings	$25,000 00	$35,000 00	$600 00	$35,000 00	$12,000 00	$58,559 00	$50,227 74	$26,482 89	$20,000 00	$2,000 00	$2,000 00	$266,869 63
Officers' quarters	4,500 00	10,000 00	500 00	3,000 00	800 00	5,000 00	5,236 92	26,661 64	10,000 00	.....	.....	65,698 56
Wharves, bridges, landings, and boats	4,500 00	12,000 00	400 00	30,000 00	10,500 00	33,070 00	3,648 26	24,706 03	15,000 00	.....	11,200 00	145,024 29
Roads, walks, gutters, and drains	3,000 00	8,500 00	350 00	20,000 00	5,000 00	4,000 00	22,519 02	10,158 90	8,000 00	.....	.....	81,527 92
Fences and walls	300 00	2,000 00	250 00	2,500 00	500 00	22,000 00	6,763 45	6,500 63	6,000 00	.....	100 00	46,914 08
Cranes, scows, and derricks	4,000 00	3,000 00	.....	3,000 00	2,000 00	7,800 00	9,160 05	677 00	10,000 00	.....	.....	39,637 05
Furnaces, forges, heating apparatus, &c	3,000 00	2,500 00	50 00	5,000 00	1,000 00	14,250 00	680 30	427 00	4,000 00	.....	.....	30,907 30
Tracks and scales	100 00	5,000 00	.....	1,500 00	2,000 00	1,500 00	2,340 78	1,025 00	5,000 00	.....	.....	18,465 78
Water and gas works	3,500 00	5,500 00	.....	4,000 00	700 00	1,500 00	4,904 85	6,586 00	6,000 00	.....	.....	32,690 85
Dredging and scowing	.....	1,000 00	.....	20,000 00	500 00	11,000 00	11,676 18	.....	20,000 00	.....	.....	64,176 18
Dry-docks	1,500 00	25,000 00	.....	3,000 00	5,000 00	10,000 00	2,482 11	5,000 00	52,000 00	.....	.....	103,982 11
Miscellaneous repairs	100 60	5,000 00	400 00	5,000 00	10,000 00	5,000 00	3,437 17	2,850 00	18,000 0	.....	300 00	50,087 17
Total	49,500 00	114,500 00	2,550 00	132,000 00	50,000 00	173,679 00	123,076 83	111,075 09	174,000 00	2,000 00	13,600 00	945,980 92

No. 6.—*Detailed estimates for general maintenance received from yards and stations for the fiscal year ending June 30, 1879.*

Objects.	Portsmouth, N. H.	Boston, Mass.	New London, Conn.	New York, N. Y.	League Island, Pa.	Washington, D. C.	Norfolk, Va.	Pensacola, Fla.	Mare Island, Cal.	Key West, Fla.	Total.
Freight and transportation	$50 00	$100 00	$100 00	$200 00	$100 00	$50 00	$100 00	$1,000 00	$9,000 00	.....	$10,700 00
Printing, stationery, and advertising	500 00	1,200 00	400 00	2,000 00	2,000 00	1,500 00	1,500 00	850 00	3,500 00	.....	13,450 00
Books, maps, models, and drawings	100 00	150 00	200 00	1,000 00	500 00	50 00	1,002 83	100 00	4,700 00	.....	7,892 83
Purchase and repair of fire-engines	10,000 00	3,000 00	.....	5,000 00	800 00	500 00	2,884 39	4,746 25	2,000 00	.....	28,930 64
Machinery of every description and patent rights	100 00	1,500 00	3,000 00	3,000 00	5,000 00	2,000 00	4,034 89	5,410 00	4,000 00	.....	28,044 89
Repairs on steam-engines and attendance on same	100 00	3,500 00	3,000 00	4,000 00	2,000 00	11,000 00	2,124 12	5,737 50	5,000 00	.....	36,461 62
Purchase and maintenance of oxen and horse, pay of hired teams, &c	7,000 00	25,000 00	5,000 00	30,000 00	15,000 00	4,500 00	15,915 83	6,265 00	20,000 00	.....	128,680 83
Carts, timber wheels, and tools of every description	2,500 00	10,000 00	4,000 00	7,000 00	5,000 00	2,000 00	7,061 46	5,760 00	3,500 00	$10 20	46,861 66
Postage on letters on public service, and telegrams	50 00	250 00	100 00	200 00	500 00	50 00	150 00	1,400 00	60 00	.....	2,760 00
Furniture for government houses and offices in navy-yards	10,000 00	2,000 00	500 00	6,000 00	1,000 00	3,000 00	7,288 35	5,400 00	6,000 00	.....	41,188 35
Coal and other fuel for yards and docks purposes	6,500 00	5,000 00	2,700 00	5,000 00	2,500 00	3,000 00	2,137 44	1,100 00	7,000 00	.....	34,957 44
Candles, oil, and gas	2,500 00	3,000 00	84 00	6,000 00	500 00	1,600 00	3,100 00	1,312 50	9,500 00	.....	27,596 50
Clearing and cleaning up yard and care of buildings	6,000 00	10,000 00	2,000 00	10,000 00	8,500 00	15,000 00	6,598 36	11,021 30	2,000 00	.....	71,119 66
Attendance on fires, lights, fire-engines, and apparatus	5,000 00	5,500 00	.....	8,000 00	9,000 00	4,000 00	5,009 90	506 55	3,000 00	.....	40,016 45
Incidental labor not chargeable to other appropriations	6,000 00	2,500 00	4,200 00	20,000 00	15,000 00	10,000 00	10,000 00	5,479 80	11,000 00	.....	84,179 80
Water-tax	100 00	11,000 00	100 00	7,000 00	.....	.....	30 00	201 60	5,700 00	.....	24,131 60
Tolls and ferriage	50 00	.....	100 00	300 00	.....	.....	300 00	180 00	3,000 00	.....	3,930 00
Pay of watchmen	13,000 00	21,000 00	4,380 00	40,000 00	13,500 00	12,000 00	17,979 90	13,338 00	18,000 00	1,095 00	154,292 90
Flags, awnings, and packing-boxes	100 00	300 00	200 00	300 00	100 00	50 00	378 80	450 00	600 00	.....	2,478 80
Rent of landing	75 00	.....	.....	.....	.....	.....	.....	.....	.....	.....	75 00
Total	69,725 00	105,000 00	30,064 00	155,000 00	81,000 00	70,300 00	87,596 27	70,258 50	117,560 00	1,135 20	787,638 97

No. 7.—*Bureau's estimates for navy-yards, stations, and Naval Asylum, for fiscal year ending June* 30, 1879.

Yards and stations.	Appropriations.					
	Yard-improvements.	Repairs and preservation.	General maintenance.	Civil establishment.	Contingent.	Total.
Portsmouth	$47,000 00	$39,000 00	$53,000 00	$4,417 75	.....	$143,417 75
Boston	103,869 00	90,000 00	80,000 00	4,417 75	.....	278,286 75
New London	.....	2,550 00	10,000 00	1,017 25	.....	13,567 25
New York	107,000 00	100 000 00	90,000 00	6,921 25	.....	303,921 25
League Island	500,000 00	40,000 00	60,000 00	6,921 25	.....	606,921 25
Washington	.....	90,000 00	70,000 00	4,417 75	.....	164,417 75
Norfolk	125,000 00	90,000 00	70,000 00	5,356 25	.....	290,356 25
Pensacola	125,000 00	80,000 00	60,000 00	2,417 25	.....	267,417 25
Mare Island	629,212 00	100,000 00	80,000 00	6,921 25	.....	816,133 25
Sackett's Harbor	.....	2,000 00	.....	.....	.....	2,000 00
Key West	30,000 00	13,600 00	1,605 00	.....	.....	45,205 00
Naval Asylum	64,434 00	.....	.....	.....	.....	64,434 00
Contingent	.....	.....	.....	.....	$25,000 00	25,000 00
Total	1,731,515 00	647,150 00	574,605 00	42,807 75	25,000 00	3,021,077 75

The aggregate amount of estimates from the different yards and stations for improvements is large, being $4,926,023.17. This amount has been much reduced, but owing to the fact that very small appropriations have been made for several years past, and that some large and costly works which have heretofore been in progress and which are now suspended for want of appropriations, it is believed that the estimates submitted are no more than can be judiciously expended, and are such as the good of the service requires.

At the navy-yard, Portsmouth, N. H.

For repairing floating-dock	$9,000 00
For paving gutters and drains	5,000 00
For water-works	3,000 00
For timber-shed	30,000 00
	47,000 00

The floating dry-dock is the most costly and important work in the yard, and is of perishable materials. No extensive repairs have been made for some years, and the sides, sloping ribs, and end gate now require calking and painting, and some of the planking should be renewed.

These repairs are of the utmost importance, as the dock is the only means in this harbor by which access can be obtained to the bottoms of vessels needing repairs.

A small appropriation for paving gutters and drains is much needed, as in some places water stands after rains, and in others a considerable space drains into the dry-dock basin, carrying sediment, which endangers the dock and ship when one is landed or docked to be taken on shore.

On Seavey's Island several artificial ponds or reservoirs have been constructed, which are fed by springs, affording an abundant supply of pure fresh water. The elevation of these reservoirs is such as to supply the cisterns in the yard, and their capacity is quite sufficient to furnish good pure water for all the purposes of the yard; and, to render the arrangement complete, a small appropriation is needed for furnishing and laying the necessary pipes. The object is an important one.

Increased accommodations for the stowage and safe-keeping of timber is much needed at this yard. Large quantities of valuable material are exposed to the weather, which causes rapid deterioration, and the annual loss from this cause is very great. The saving which would be realized by proper protection would soon pay for the cost of the building.

At the navy-yard, Boston.

For boundary-wall	$10,000 00
For cart-shed	10,000 00
For yards and docks workshops	50,000 00
For paving and grading and extension of rail-tracks	15,000 00
For new floor to rope-walk	18,869 00
	103,869 00

An appropriation for the boundary-wall on the southwesterly side of the yard is most urgently required for the protection of the large amount of public property stored in the vicinity.

At this point the government property is bounded by property belonging to the Fitchburg Railroad Company, on which is stored a large quantity of coal. The present division is an old dilapidated wooden shed and fence, affording no protection whatever against the ingress of depredators who may desire to enter the yard for plunder or incendiary purposes.

This old fence is 450 feet long, reaching to deep water, and should a fire occur there, either through accident or design, the loss to the government would be immense. It is earnestly hoped that an appropriation will be made for this object.

The great necessity of a good, substantial building, capable of accommodating and protecting all the wagons, carts, timber wheels, and all other vehicles belonging to the yard, has long been felt, and for the safety and proper protection of this proporty the improvement is absolutely indispensable.

The deterioration of the implements from exposure to the sun, rains, and snows is very great, and the consequent cost of repairs is a large item of expense.

The present wooden shed is far beyond repair, very old, and in a dilapidated condition.

The buildings occupied by the department of yards and docks for workshops and storage are not suited to the wants of the department; they are located in different parts of the yard, most of them being small, unsightly, dilapidated wooden sheds, and entirely unsuitable for the purposes for which they are used, and it causes the department much extra labor and expense in carrying on the work.

The construction of a proper building on the site of the building No. 54 would concentrate nearly all the civil engineer's forces, and at the same time remove an old wooden structure and lessen the chances of fire.

Some of the streets in this yard are neither graded nor paved, and, as they are much used in the transportation of materials, they are often in a condition to render hauling difficult; and an appropriation is much needed for their improvement and for extending the rail-tracks.

The floor of the rope-walk is in a very bad condition, is frequently giving way, and, as the bureau has had no funds at its disposal for a thorough repair, temporary repairs have been made from time to time, causing interruption in the manufacture of cordage. A new floor

should be put in this important building; and an appropriation for this purpose is strongly urged.

At the navy yard, New York.

For timber-shed	$50,000 00
For coal-depot	20,000 00
For retaining crib-work	30,000 00
For fire-engine house	7,000 00
	107,000 00

One of the objects of first importance and necessity at this yard is an increase in the accommodations for the storage of timber and plank, large quantities of which are now in the yard unprotected from the effects of the weather and subject to rapid decay. The loss occasioned by the deterioration of this valuable and costly material would soon be equal to the cost of the building, and the early construction of this shed would therefore be a matter of economy.

The expense of hauling the large quantities of coal used at this yard is very great, and it is proposed to adopt a plan now in use at Amboy and other places, where, by the use of machinery, a vast saving is made in both time and money. The plan is a good one, and it is hoped the appropriation will be made.

Some protection is needed to the yard along the boundary-line from the channel to Washington avenue, and for this purpose it is proposed to construct a crib-work 60 feet within the government line, by which arrangement a slip 60 feet wide will be secured, and the inside of the crib-work would form the northerly boundary of the timber-basin, and upon which timber could be landed in close proximity to the basin.

The length of this is 760 feet, and borders on a slip 70 feet wide belonging to the city of Brooklyn.

The authorities of that city and the harbor commissioners have complained and still complain that the alluvium from this unprotected water-front of the government lands is constantly passing into their slip, and also into the channel, and obstructing navigation in that quarter.

It is to obviate these complaints, and to protect and improve the government property, that an appropriation is asked for this object. It is an important one, and would add greatly to the protection and usefulness of that section of the yard.

The place now used for a fire-engine house is an old dilapidated shed, requiring constant repairs, and is entirely unsuitable for the purpose. In the shed the fire-engine horses are kept, while the other horses are stationed in another portion of the yard. The proposed plan will permit all the horses being kept in the new stables, and furnish all the necessary conveniences for the men and machines, and for quick transit in case of fire.

At the navy-yard, League Island.

For commencing quay-wall on Delaware avenue	$60,000 00
For commencing floating-dock basin	255,000 00
For dredging and filling in	50,000 00
For yard buildings	75,000 00
For water, gas, and sewerage	30,000 00
For grading, graveling, and paving	20,000 00
For temporary embankments	5,000 00
For roads and rail-tracks	5,000 00
	500,000 00

In executing the plan proposed for the development of this yard, one of the first objects of improvement should be the construction of a permanent quay-wall along the Delaware front. This will protect the yard from inundation in that quarter, provide landing places for materials and berths for vessels, and the early commencement of its construction is regarded of great importance, as it is a work of great magnitude, and will require large appropriations and much time for its completion.

The commencement of the floating-dock basin is a work that should be provided for at once, as there are no means at present by which access can be had to the bottoms of vessels requiring repairs. We have a floating-dock at the yard, but there is no place yet prepared for its use, and unless an appropriation is made at once to secure a proper place for its operation, the dock will remain useless and subject to great deterioration. The estimates for dredging and filling in is sufficient to raise to the established grade that part of the yard adjacent to five building-ways and the yard buildings embraced in the estimates, and also for completing the filling in on the north side of the back channel from Broad street easterly 1,100 feet, and the same distance westerly. This filling in should be done as soon as practicable, so that the material may become well settled by the time such newly-filled portions of the yard shall be needed for use.

Under head of water, gas, and sewerage is submitted an estimate for the commencement of works for the permanent watter-supply of the yard, and for putting down water, gas, and sewer-pipes in Broad street.

For grading, graveling, and paving is estimated a sum sufficient to commence the grading, graveling, and paving of Broad street, and to grade and commence the graveling of the grounds and streets in the vicinity of the quay-wall, dock-basin, and buildings.

The temporary embankments around the island require enlarging, in order to better resist the action of the water, and for that purpose the sum estimated is deemed necessary in addition to the ordinary allotment for general repairs.

It is an important object, as, unless proper care is taken of the embankments, the island is liable to be flooded by freshet.

The enlargement of the filled area of the yard will require a considerable extension of the temporary plank-roads and rail-tracks, and an estimate is, therefore, submitted for those objects.

At the navy-yard at Norfolk, Va.

For timber-shed No. 32	$35,000 00
For timber-shed No. 33	35,000 00
For chain and cordage store No. 12	20,000 00
For railroad and engine-house	15,000 00
For extension of quay-wall	20,000 00
	125,000 00

The limited amount of accommodations for the storage and protection of timber at this yard is a source of great loss and inconvenience. Very large quantities of costly and valuable ship-timber have been accumulated here for future use, most of which is exposed to the weather and subject to rapid decay. Such timber cannot always be readily obtained when wanted, and it is wise policy to keep a good stock on hand, that it may be thoroughly seasoned when needed for use. An appropriation for the sheds is regarded as of great importance and necessity.

The appropriation for chain-cable and cordage store is greatly needed; a very large quantity of chains is now stowed outside, exposed to the

weather, there being no building for their protection; the present storage-room for sails and cordage is so limited as to cause great inconvenience and loss, and additional space for these materials is greatly needed.

The railroad and engine-house.—The building, in connection with a system of railroad tracks, locomotives, and cars connecting all the shops and storehouses with the dry-dock and wharves, in order to facilitate the transportation of materials about the yard, and to reduce the present cost of the same, is an object of great importance, as the cost of transporting heavy materials about the yard by means of oxen and horses is one of our largest items of expense under general maintenance.

The extension of the quay-wall is a work of great importance as a permanent improvement, and as preventive to the large annual expenditure for repairs to the wooden wharves, which in this climate decay rapidly.

At the navy-yard, Pensacola.

For timber shed No. 11	$38,356 00
For machine-shop for steam-engineering	86,644 00
	125,000 00

Timber-shed No. 11 is much needed for the protection of timber and lumber belonging to the Bureau of Yards and Docks. This bureau has barely storage-space for the protection of a small quantity of planed lumber, all of its rough timber and lumber being exposed alternately to the rays of the sun and the frequent rains of summer, which, in this climate, causes rapid decay and much loss. The cost of the building would soon be saved by proper protection of the materials from the effects of the weather, which are very damaging.

The facilities for doing work in the machinist department at this yard are very limited, and as the machinery of vessels attached to the Gulf squadron often requires repairs of more or less importance, it is thought that a proper shop should be provided at this station, and an estimate for the building is therefore submitted:

At the navy-yard, Mare Island, Cal.

For continuation of stone dry-dock	$400,000 00
For removal of gas-holder and gas-works	6,750 00
For completing water-mains and service-pipes for reservoir	27,462 00
For roads, pavements, and railways	25,000 00
For extension of timber-shed No. 94	20,000 00
For dredging and scowing	100,000 00
For commencing quay-walls and wharves	50,000 00
	629,212 00

With such a meager allotment as was appropriated for construction of stone dry-dock during the last year, it was impossible to do more than keep the premises and working appliances in a reasonable degree of order.

The entire failure to appropriate anything to carry on the work upon the stone dock during the present fiscal year is a misfortune, the extent of which will be appreciated when work recommences upon it.

The last annual report gave in detail the reasons for which the continuous prosecution of the work is urged; it seems proper to again present some of them.

The peculiar circumstances under which a stone dry-dock must be built render its construction one of difficulty and hazard, and therefore

demands, as far as possible, prompt and continuous operations. The whole foundation (a very large portion of its masonry resting upon a level many feet below tide-water) requires protection while being laid by a coffer-dam, of a necessarily temporary character, whose continuation is not calculated upon, except for about the time that its use ought to be required in the uninterrupted construction of the work it is intended to secure. Its iron fastenings are exposed to the corrosive action of salt water, and thus, sooner or later, must become too weak for its safety; other influences of water-pressure, the action of waves, and general wear and tear in the course of time must add their impairing effect and impose the necessity of continued repairs, whose cost increases in proportion to the length of time such structures are maintained; other obvious reasons urge the completion of dry-docks as speedily as their nature permits.

It seems proper to state as an additional reason for speedily completing this work that the sectional wooden dock, on which we at present solely depend for docking vessels, cannot be depended upon much longer without very extensive repairs, if not entire renewal. In either event the cost of such work must be great, and wisdom would seem to dictate its prevention by carrying the stone dock at once to completion.

The bureau therefore urges the provision of sufficient means for pushing the stone dock during the coming fiscal year as far as it can be carried.

If the stone for the entrance can be provided and laid and the caisson finished, the structure can be put in a suitable state for completion the following year, provided the remaining necessary funds be then furnished.

The location of the stone-dock pumping-house and well between the wings of the smithery, No. 69, as recommended in the report of the board of civil engineers of November, 1873, necessitates the removal of the present gas holder, which is situated on these premises. It is proposed to remove the whole of the gas-works to block No. 51, which by the engineer's report is assigned for such purposes. The estimate includes a convenient but temporary building and the use of the present works, as it is believed they will serve until a more extensive and permanent establishment can be provided. For the completion of the yard water-distribution system nothing remains to be done but to continue the laying of the pipes from the reservoir to the point in the yard where the finished main now terminates, at house No. 14, and to provide the necessary branch-mains and service-pipes to the stables and other still unprovided establishments. The extension of the main now in connection with the Vallejo Water Company's works to the yard-reservoir provides for its additional supply from those works in case it should be needed, and at the same time answers for a distributing-pipe for general service. This arrangement supposes that a single main can perform only one of these duties at a time; but from the connection of the Vallejo pipe with its high reservoir, recently effected, and which gives a head of about 150 feet above the coping of the quay-wall, the service of supply to the yard-reservoir can be operated on occasions when there will be little consumption of water, say in the night-time, and the use of the pipe for distribution will not then be needed.

The plan originally contemplated the erection of pumping-works on the yard, supposing that the Vallejo supply would continue direct from the company's pond, and would necessitate pumping to raise it to the higher level of the yard reservoir, and the present estimate provides for the carrying out of this design, anticipating the possibility of its necessity in case a satisfactory arrangement with the Vallejo company

cannot be made for a supply from its high reservoir, now supplied through steam-power, which would involve on their part the expense of pumping beyond their local consumption the additional quantity of water that the yard may require.

Roads and pavements.—The want of good roads, as an adequate water-supply, has long been severely felt at this yard, and no improvements are more needed than these; without them all others lose a great part of their efficiency. In wet weather, owing to the natural quality of the soil whereon the yard routes of travel lie, they become almost impassable to teams, and many important points are inaccessible owing to the prevalence of deep mud. The appropriation is one of great importance and necessity, and is strongly urged by the bureau.

Extension of timber-shed No. 94.—The accumulation of large supplies of timber on the yard, and the great want of buildings for sheltering such material from the deleterious effects of the weather of this peculiar climate, necessitates the erection of more timber-sheds. The increasing wants of the yard for workshops and store-rooms has forced the appropriation of buildings originally intended in part for timber-sheds to these purposes, and there is now available only one building for storing wood materials, and this of limited capacity. As the site of the present shed No. 94 is assigned by the board of civil engineers for another purpose, and the shed itself will consequently have to be removed eventually, it is here proposed to extend the building only in a temporary manner.

The roof-frame of the old ordnance building may be made available for this purpose, and its use will savemuch cost; the remainder of the work will be of wood, and so put up as to afford a shelter for the materials that will be stored therein. The site for the extension is now filled in.

Dredging and scowing.—For maintaining a proper depth of water in the vicinity of the wharves and at the landings, the operation of dredging is indispensable; its efficiency and economy, however, may be greatly increased by the adoption of some system that will utilize the excavated material by depositing upon the tule-lands belonging to the island, instead of towing it several miles and dumping it overboard to be again deposited in the channel. With the view of providing suitable machinery and apparatus to secure this desirable end, the bureau submits this estimate and urges the appropriation.

Commencing quay-wall and wharves.—The location and system of quay-walls, as recommended by the board of civil engineers, ought to be at once undertaken, not only for the purpose of supplying the necessities of the national shipping, but for the maintenance of the yard water-front and its proper channel. An improvement of this kind must be considered fundamental for the essential purposes of a navy-yard, and should be undertaken in the early stages of its development and continued until a reasonable provision is made to meet the demands which are likely to arise in the future.

The present irregular water-front causes eddies and deposits, and this renders the almost constant use of dredging-machines a necessity.

With a straight line of quay-wall, presenting no obstructions to the natural currents of the river, as is now proposed, it is confidently believed that the currents sweeping along this uninterrupted line will scour the bottom and give a line of wharfage accessible at all times.

This is one of the most important objects for which appropriations are asked.

It is a work of great magnitude, will require several years for its entire completion, and should be commenced as soon as possible.

KEY WEST, FLORIDA.

The amount asked for this station is for rebuilding the main landing, which was partially destroyed during the late storms.

This station is one of importance to our Gulf squadron as a coal-depot, and where slight repairs can be made. The wharf is the only landing on the government property, and the usefulness of the station depends greatly upon its being kept in proper condition for the landing and shipping of coal and other materials and stores.

REPAIRS AND PRESERVATION.

The amount submitted under this head, $647,150, is very much less than the estimates received from the various yards, though considerably more than the allotments for the past and present fiscal years. The amounts appropriated for this object for the last and present fiscal years were entirely inadequate for the purpose, and the bureau has been compelled to postpone many repairs which are absolutely necessary for the proper protection of the public property.

It is hoped that Congress, at its next session, will exhibit a spirit of wise liberality by appropriating for this object the sum asked for by the bureau.

GENERAL MAINTENANCE.

The amount submitted under this head, $574,605, is much less than the estimates submitted from the various yards, and it is believed to be no more than is actually necessary to meet the numerous demands upon this fund from the various yards and stations. The pay of watchmen at the several navy-yards and stations is an unavoidable expense, and amounts to a large percentage of the appropriation asked for. Other necessary expenses, such as purchase and maintenance of oxen and horses, carts, timber-wheels, coal and other fuel, candles, oil and gas, cleaning and clearing up yards, attendance on fires, fire-engines and apparatus, and water-tax, amount to a large sum, which cannot be curtailed without detriment to the public service.

CIVIL ESTABLISHMENT.

The estimate for this branch of the service is precisely the same as has been allotted to this bureau for the present fiscal year, and cannot be reduced without embarrassment to the bureau and injury to the service.

CONTINGENT.

This fund is to defray the expense of any unforeseen casualty which may occur during the fiscal year, and its expenditure is always carefully guarded.

The amount, $25,000 for all the yards, is small and will not be expended unless demanded by actual necessity.

NAVAL ASYLUM.

The amount estimated for this institution, for pay of attendants, support of beneficiaries, and necessary repairs of buildings, furniture, furnaces, grates, and care of public grounds, is $64,434, a trifle more than was asked for last year, owing to the fact that some of the buildings re-

quire an unusual amount of repairs. The expense of this institution is by law paid out of the Navy pension fund.

Accompanying this report is an abstract of offers for supplies received for furnishing articles coming under the cognizance of the Bureau of Yards and Docks, made in conformity to the act of Congress approved March 3, 1843.

The following estimates for the fiscal year ending June 30, 1879, are respectfully submitted:

Sheet No. 1. For support of Bureau of Yards and Docks	$13,560 00
Sheet No. 2. For general maintenance of yards and docks and contingent	599,605 00
Sheet No. 3. For support of Naval Asylum	64,434 00
Sheet No. 4. For repairs and preservation of navy-yards	647,150 00
Sheet No. 5. Improvements at navy-yards	1,667,081 00
For civil establishment	42,807 75
	3,034,637 75

I am, very respectfully, your obedient servant,

J. C. HOWELL,
Chief of Bureau.

Hon. R. W. THOMPSON,
Secretary of the Navy.

ABSTRACT OF OFFERS FOR SUPPLIES RECEIVED FOR FURNISHING ARTICLES COMING UNDER THE COGNIZANCE OF THE BUREAU OF YARDS AND DOCKS, MADE IN CONFORMITY TO THE ACT OF CONGRESS APPROVED MARCH 3, 1843.

Offers for supplies for the League Island navy-yard, under advertisement dated November 25, 1876, required on requisitions Nos. 66 and 67.

Requisition No. 66. White pine boards:

Maule Bros. & Co.	$242 00
H. Bayard & Co.	252 75
J. W. Gaskill & Son	*240 65

Requisition No. 67. White pine boards:

Maule Bros. & Co.	$240 00
H. Bayard & Co.	249 00
J. W. Gaskill & Son	*238 80

Offers for supplies for the League Island navy-yard, under isement dated November 29, 1876, required on requisitionadverts Nos. 68 and 69.

Requisition No. 68. Screws:

Noblit, Brown, Noblit & Co.	$77 95
Paul J. Field	*76 82
Field & Hardie	82 78

Requisition No. 69. White-pine weather-boarding:

H. Bayard & Co.	$300 00

Requisition No. 69. White-pine weather-boarding—Continued.

J. W. Gaskill & Son	$255 00
J. W. Gaskill & Son, if planed	*285 00
Maule Bros. & Co., if planed	290 00
Maule Bros. & Co., not planed	260 00

Offers for supplies for the League Island navy-yard, under advertisement dated December 2, 1876, required on requisitions Nos. 70 and 71.

Requisition No. 70. Iron:

Dell Noblit, jr.	$119 19
Morris, Wheeler & Co.	*94 97

Requisition No. 71. Kerosene oil:

Stevenson Bros. & Co	$50 00
Paul A. Davis, jr.	60 00
Thackara, Buck & Co.	*43 00

*Accepted.

Offers for supplies for the League Island navy-yard, under advertisement dated December 6, 1876, required on requisition No. 73.

Requisition No. 73. 1,470 feet drain-pipes:	
Haney & Adamson	*$251 53
O. O. Bowman & Co.	257 00
Requisition No. 73. 1,470 feet drain-pipes—Continued.	
Moorhead Clay Works	$270 35

Offers for furnishing bricks, lime, and cement required for the Washington navy-yard, under advertisement dated December 4, 1876.

	Per M.
110,000 machine-made red brick:	
John W. Myers	$6 95
Windsor & Ford	*6 50
Washington Brick-making Company	6 93
Washington Brick-making Company, hard red	7 47
50 barrels lime:	Per bbl.
Bird & Hepburn	*$1 20
	Per bbl.
L. W. Guinand	$1 30
John A. Baker	1 47
Cammack & Edmonston	1 25
50 barrels cement:	
Bird & Hepburn	*$1 55
L. W. Guinand	1 60
John A Baker	1 57
Cammack & Edmonston	1 60

Offers for furnishing one hundred barrels of cement for the Mare Island navy-yard, under advertisement dated December 8, 1876.

Rosendale cement:	
F. B. Taylor & Co.	*$299 00
A. T. Holmes & Co.	$300 00
George F. Bragg & Co.	247 00

Offers for supplies for the League Island navy-yard, under advertisement dated December 13, 1876, required on requisition No. 77.

	Per ton.
300 tons Lehigh egg coal:	
Lehigh & Wilkesbarre Coal Company	$4 85
	Per ton.
Branson & Bro.	$5 00
John Street & Co.	*4 12½
Bright & Thomas	4 14

Offers for furnishing 225 barrels hydraulic cement for League Island navy-yard, required on requisitions 78 and 79, under advertisement dated December 20, 1876.

	Per bbl.
225 barrels cement:	
Benj. Allen	$1 90
Lesley & Trinkle	1 55
	Per bbl.
Lesley & Trinkle (not for cement required)	$1 75
Paul A. Davis, jr.	1 65
Charles R. Wilson	*1 37

Offers for furnishing articles required on requisitions Nos. 81 and 82 for League Island navy-yard, under advertisement dated December 21, 1876.

Requisition No. 81. Spikes:	
Noblit, Brown, Noblit & Co.	*$32 50
Field & Hardie	35 00
Paul J. Field	34 90
Requisition No. 81. Glass and oil:	
Russell & Landis	237 40
W. F. Simes & Son	*196 00
United States White-Lead Co.	210 40
Requisition No. 82. Astral oil, brushes, &c.:	
Noblit, Brown, Noblit & Co.	$73 30
Thackara, Buck & Co.	*59 80
Paul A. Davis, jr.	60 00
Requisition No. 82. Flags:	
M. Homer & Son	*82 00
Horstman Bros. & Co.	97 80
Moses Briggs	92 00

* Accepted.

Offers for furnishing materials for the League Island navy-yard, under advertisement dated January 12, 1877.

4,000 fire-brick:	
J. E. Mitchell	$190 00
Theo. Alexander	*150 00
A. W. Rand	220 00
300 pounds rivets, 500 pounds cut nails, 10 papers gimp-tacks, and 10 gallons japan-dryer:	
Noblit, Brown, Noblit & Co.	*58 55
J. B. Shannon	$61 00
Paul J. Field	60 70
Field & Hardie	58 65
170 pounds tire steel and 100 tire bolts:	
Midvale Steel Works	17 80
J. B. Shannon	19 78
Paul J. Field	*14 85
Morris Wheeler & Co.	15 10

Offers for furnishing materials for the League Island navy-yard, under advertisement dated February 7, 1877.

Class No. 1. Lumber:	
J. F. Quigley	$2,424 50
J. W. Gaskill & Sons	*2,222 25
Maule, Bro. & Co	2,840 00
Class No. 2. Lumber:	
J. F. Quigley	736 00
J. W. Gaskill & Sons	*609 50
Class No. 3. Bricks:	
J. & I. Gillespie	4,999 00
Benjamin Allen	$5,586 00
Excelsior Brick Company	*4,329 00
Class No. 4. Cement, &c.:	
United States White Lead Company	*1,282 85
Benjamin Allen	†1,261 00
P. J. Field	1,298 45
E. A. Smith & Son	1,301 80
Leslie & Trinkle	1,314 00

Offers for furnishing iron roof-frame, cornices, and dormers, and cornices, for the navy-yard at League Island, Pa., under advertisement dated March 1, 1877.

IRON ROOF-FRAME.

For steam-engineering, storehouse No. 4:	
Leighton Bridge and Iron Works	$13,075 00
Keystone Bridge Company	11,283 00
Edge Moor Iron Company	12,748 00
Passaic Rolling Mill Company	9,980 00
L. Sykes & Son	*$9,269 96
Iron City Bridge-Works	16,900 00
William B. Scaife & Sons	12,495 00
Phœnix Iron Company	10,334 57
Philadelphia Architectural Iron Company	9,957 26
Birdsall Cornell	12,671 00
Nathaniel Cheney	11,882 00

GALVANIZED-IRON CORNICES, DORMERS, ETC.

For steam-engineering, storehouse No. 4:	
Philadelphia Architectural Iron Company	*$2,481 11
Louis Fischer	5,491 12
Kressler & Brand	4,236 34
Nathaniel Cheney	7,427 79
Kittredge Cornice and Ornamental Company	3,403 14
John F. Starr, jr.	$5,406 22
Marshall Bros. & Co.	3,794 68
John Siddons	3,105 89
Indianapolis Cornice Works	3,259 43
Stevenson & Cartwright	4,003 79
Patterson & Bro.	3,964 10
D. W. Stockstill & Co.	6,096 37

* Accepted. † Rejected.

GALVANIZED-IRON CORNICES.

For storage and mould-loft building No. 7:

Philadelphia Architectural Iron Company	*$1,017 89
Louis Fischer	1,546 80
Kressler & Brand	1,782 20
Nathl. Cheney	3,349 69
Kittredge Cornice and Ornamental Company	1,308 87
John F. Starr, jr	$2,111 60
Marshall Bros. & Co	1,353 40
John Siddons	1,161 62
Indianapolis Cornice Works	1,460 00
Stevenson & Cartwright	1,594 00
Patterson & Bro	1.484 25
D. W. Stockstill & Co	2,770 45

We certify that the above proposals were opened in our presence, that the scale is correct, and the contracts have been awarded to the lowest bidders according to the advertisement.

J. C. HOWELL,
Chief of Bureau.
WM. P. S. SANGER,
Civil Engineer of Bureau.
A. E. MERRITT,
Chief Clerk.
D. J. PARTELLO,
Clerk of Class 4.

BUREAU OF YARDS AND DOCKS,
March 31, 1877.

Offers for supplying navy-yard, Portsmouth, N. H., under advertisement dated April 2, 1877 for fifty tons coal, white-ash.

Anthracite, steamboat size:

	Per ton.
E. F. Sise & Co	*$4 98
Russell and Odion	5 50
C. E. Walker & Co	$5 70
Howard Snelling & Co	8 00

Offers for furnishing materials, &c., for the League Island navy-yard, under advertisement dated 4th April, 1877.

7,440 feet spruce joists, 20 feet long:

J. & C. Stockham	$163 68
E. B. Edwards & Co	204 60
J. W. Gaskill & Son	*162 94

23,430 feet spruce joists, 22 feet long:

J. & C. Stockham	515 46
E. B. Edwards & Co	$644 32
J. W. Gaskill & Son	*513 12

7,200 feet spruce joists, 24 feet long:

J. & C. Stockham	158 40
E. B. Edwards & Co	198 00
J. W. Gaskill & Son	*157 68

Offers for furnishing materials, &c., for the Portsmouth, N. H., navy-yard, under advertisement dated April 4, 1877.

20,000 feet bridge-plank, 4-inch:

Samuel Adams & Co	*$360 00
E. H. Jewett	400 00
G. A. Hammond	458 00

Pitch and tar:

Rider & Catton	*32 70
George T. Vaughan	34 20

Malleable-iron pipes and valves:

Rider & Cotton	*$47 91
John P. Sweetser	51 99
Isaiah Wilson	90 44

Sheet-zinc, sash-cord, paints, &c.:

John H. Bailey	*96 90
Rider and Cotton	97 50
Isaiah Wilson	105 75
A. T. Wendell & Co	109 55

* Accepted.

Offers for furnishing materials, &c., for the Portsmouth, N. H., navy-yard, under advertisement dated April 9, 1877.

Upholstering-goods:

C. Dwight Hanscom & Co	*$151 85
Fletcher & Tanton	167 92
E. M. Brown & Co	186 90
Ayers & Docke	152 15

Tacks, brushes, padlocks, &c.:

John H. Bailey	*52 37
A. T. Wendell & Co	55 34
Isaiah Wilson	57 67
Rider & Cotton	54 59

Lava tips, kettles, and pans:

John P. Sweetser	*$7 05
Rider & Cotton	8 75

Sperm-oil:

Rider & Cotton	*72 45
G. T. Vaughan	72 68
N. F. Mathes	73 60

Offers for furnishing supplies for the League Island navy-yard, required under advertisement dated April 23, 1877.

Class No. 4. Yellow-pine lumber:

A. A. McCullough	*$701 50
Austin P. Brown	746 00
J. W. Gaskill & Sons	748 00

Class No. 6. White-pine lumber:

A. A. McCullough	5,543 35
Austin P. Brown	5,812 55
J. W. Gaskill & Sons	5,376 94
John F. Quigley	*5,097 82

Class No. 9. Sand:

Austin P. Brown	*119 00

Class No. 10. Slate:

Wilson & Miller	3,270 22
A. A. McCullough	2,777 25
J. G. Millspaugh	2,591 69
George P. Goff	2,563 44
Austin P. Brown	2,806 35
Peach Bottom Slate Mining Company	2,965 55
James J. Walton	‡295 38
Isaac Parker, jr	*2,392 93

Class No. 11. Iron, iron nails, and spikes:

Paul J. Field	$952 50
J. G. Millspaugh	958 80
George P. Goff	1,000 20
Austin P. Brown	897 10
J. W. Gaskill & Sons	892 90
Charles J. Field	$909 60
J. B. Shannon	*864 63
Noblit, Brown & Co	945 80

Class No. 15. Paints, oils, and glass:

William F. Simes & Sons	1,785 10
George P. Goff	1,694 47
Austin P. Brown	*1,404 94
J. W. Gaskill & Sons	1,572 14
United States Lead Company	1,693 23
J. B. Shannon	1,770 09

Class No. 17. Hardware:

Paul J. Field	3,348 80
J. G. Millspaugh	3,443 82
George P. Goff	3,277 79
Austin P. Brown	3,334 15
J. W. Gaskill & Sons	*2,023 14
J. D. Rowland	3,658 95
Charles J. Field	2,583 34
J. B. Shannon	3,062 91
Noblit, Brown & Co	3,310 82
Jos. J. Walton	†1,260 00

Class No. 25. Iron-work, cast-iron columns &c.:

Birdsall Gornell	6,260 96
Austin P. Brown	*5,448 00
J. D. Rowland	6,892 80
S. J. Creswell, jr	6,300 00
D. S. Creswell	6,462 00
Philadelphia Architectural IronCo	5,600 00

We certify that the above proposals were opened in our presence, that the above, scale is correct, and that the contracts were awarded to the lowest bidder, according to the advertisement.

J. C. HOWELL,
Chief of Bureau of Yards and Docks.
W. P. S. SANGER,
Civil Engineer of Bureau.
A. E. MERRITT,
Chief Clerk of Bureau.
D. J. PARTELLO,
Clerk of Class Four.

BUREAU OF YARDS AND DOCKS,
May 8, 1877.

---

* Accepted. † Erroneous. ‡ Informal.

Offers for furnishing articles required on requisition No. 44 for Naval Asylum under advertisement dated June 11, 1877.

Mattresses and pillows:	
Noblit, Brown, Noblit & Co.	*$156 00
W. Bascome	165 00
Lockers and tables:	
Robertson & Bryan	*129 00
Oil-cloth:	
McCallum, Crease & Straw per yard	110
J. F. & E. B. Orne & Co., per yard	*1 00
Reeve L. Knight & Co., per yard	1 40

Offers for furnishing provender, required for Washington navy-yard under advertisement dated June 28, 1877.

30 tons hay, 5 tons straw, 25,000 pounds corn-meal, 500 bushels oats, and 500 bushels shorts:	
G. Z. Raub	†$40 30
John A. Baker	$1,485 90
O. E. Hine	*1,420 00
J. D. Cumming	1,809 23
A. E. Phillips	1,613 50

Offers for furnishing beef, groceries, and bread required for the Naval Asylum, Philadelphia under advertisement dated June 26, 1877, on requisitions Nos. 1, 2, and 3.

Requisition No. 1, beef, &c.:	
G. Scheidt	$1,134 50
Henry Jahke	*983 00
Requisition No. 2, groceries:	
Anderson & Dunlap	667 90
Requisition No. 2, groceries—Continued.	
S. Hill	$643 45
R. McKeon	*620 75
Requisition No. 3, bread:	
J. McIlwain	*220 00

Offers for furnishing Georgia heart-pine timber, required for the Washington navy-yard, under advertisement dated June 27, 1877.

Georgia heart-pine timber:	
Smith & Wimsatt	$34 50 per M.
W. W. McCullough	*$29 00 per M
Thos. W. Smith	33 00 " "

*Accepted.

Estimates of appropriations required for the service of the fiscal year ending June 30, 1879, by the Bureau of Yards and Docks, Navy Department.

Detailed objects of expenditure, and explanations.	Estimated amount which will be required for each detailed object of expenditure.	Amount appropriated for the current fiscal year ending June 30, 1879.
SALARIES.		
Chief clerk, per act July 5, 1862	$1,800 00	$1,800 00
Draughtsman and clerk of class 4, per act of March 7, 1867	1,800 00	1,800 00
One clerk of class 4, per act of March 7, 1867	1,800 00	1,800 00
Two clerks of class 3, per act of March 7, 1867	3,200 00	3,200 00
One clerk of class 2, per act of March 7, 1867	1,400 00	1,400 00
One clerk of class 1, per act of March 7, 1867	1,200 00	1,200 00
One messenger, per acts of July 5, 1862 and July 12, 1870	840 00	840 00
One laborer, per acts of July 5, 1862, and July 12, 1870	720 00	720 00
	12,760 00	12,760 00
CONTINGENT EXPENSES.		
Stationery, books, plans, drawings, incidental labor, and miscellaneous items.	800 00	800 00
FOR GENERAL MAINTENANCE.		
For general maintenance of yards and docks, freights and transportation of materials and stores; books, maps, models, and drawings; purchase and repair of fire-engines; machinery and patent right to use the same; repairs of steam-engines and attendance on the same; purchase and maintenance of oxen, horses, and driving teams; carts and timber-wheels for navy-yard purposes; tools and repairs of the same; postage on letters and other mailable matter on public service, and telegram; furniture for government houses and offices in navy-yards, coal and other fuel, candles, oil, and gas; cleaning and clearing up yards and care of public buildings; attendance on fires, lights, fire-engines and apparatus; for clerical and incidental labor at navy-yards; water-tax; tolls and ferriages; pay of watchmen in navy-yards; awnings and packing-boxes for yards and docks purposes	574,605 00	440,000 00
CONTINGENT.		
For contingent expenses that may arise at navy-yards and stations	25,000 00	20,000 00
NAVAL ASYLUM.		
One superintendent	600 00	600 00
One steward	480 00	480 00
One matron	360 00	360 00
One cook	240 00	240 00
Two assistant cooks, at $168 each	336 00	168 00
One chief laundress	192 00	192 00
Four laundresses, at $168 each	672 00	504 00
Eight scrubbers and waiters, at $168 each	1,344 00	1,344 00
Six laborers, at $240 each	1,440 00	1,440 00
One stable-keeper and driver	360 00	360 00
One master-at-arms	480 00	480 00
One corporal	300 00	300 00
One barber	360 00	360 00
One carpenter	845 00	845 00
For water-rent and gas	2,000 00	1,800 00
For cemetery, burial expenses, and head-stones	350 00	350 00
For improvement of grounds	700 00	1,000 00
For painting of walls	550 00	.....
For furniture and repairs of the same	1,750 00	500 00
For repairs to buildings, furnaces, grates, &c	5,400 00	300 00
For ice, car-tickets, &c	450 00	250 00
For support of beneficiaries	45,225 00	40,000 00
	64,434 00	51,873 00

Estimates of appropriations required for the service of the fiscal year, &c.—Continued.

Detailed object of expenditure, and explanations.	Estimated amount which will be required for each detailed object of expenditure.	Amount appropriated for the current fiscal year ending June 30, 1878.
NAVY-YARD, PORTSMOUTH, N. H.		
Repairs and preservation	$39,000 00	
NAVY-YARD, BOSTON, MASS.		
Repairs and preservation	90,000 00	
NAVY-YARD, NEW LONDON, CONN.		
Repairs and preservation	2,550 00	
NAVY-YARD, NEW YORK, N. Y.		
Repairs and preservation	100,000 00	
NAVY-YARD, LEAGUE ISLAND, PA.		
Repairs and preservation	40,000 00	
NAVY-YARD, WASHINGTON, D. C.		
Repairs and preservation	90,000 00	$150,000 00
NAVY-YARD, NORFOLK, VA.		
Repairs and preservation	90,000 00	
NAVY-YARD, PENSACOLA, FLA.		
Repairs and preservation	80,000 00	
NAVY-YARD, MARE ISLAND, CAL.		
Repairs and preservation	100,000 00	
NAVAL STATION, SACKETT'S HARBOR, N. Y.		
Repairs and preservation	2,000 00	
NAVAL STATION, KEY WEST, FLA.		
Repairs and preservation	13,600 00	
	647,150 00	150,000 00
NAVY-YARD, PORTSMOUTH, N. H.		
Repairs of dry-dock	9,000 00	.....
Paving, gutters and drains	5,000 00	.....
Water-works	3,000 00	.....
Timber-shed	30,000 00	.....
	47,000 00	.....
NAVY-YARD, BOSTON, MASS.		
Boundary-wall	10,000 00	.....
Cart-shed	10,000 00	.....
Yards and docks, work-shops	50,000 00	.....
Paving and grading and extension of railway facilities	15,000 00	.....
New floor at rope-walk	18,869 00	.....
	103,869 00	.....
NAVY-YARD, NEW YORK, N. Y.		
Timber-shed	50,000 00	.....
Coal-depot	20,000 00	.....
Retaining crib-work	30,000 00	.....
Fire-engine house	7,000 00	.....
	107,000 00	.....
NAVY-YARD, LEAGUE ISLAND, PA.		
For commencing quay-wall on Delaware front	60,000 00	.....
For commencing floating-dock basin	255,000 00	.....

Estimates of appropriations required for the service of the fiscal year, &c.—Continued.

Detailed objects of expenditure, and explanations.	Estimated amount which will be required for each detailed object of expenditure.	Amount appropriated for the current fiscal year ending June 30, 1877.
NAVY-YARD, LEAGUE ISLAND, PA.—Continued.		
Dredging and filling in	$50,000 00	.....
Yard buildings	75,000 00	.....
Water, gas, and sewerage	30,000 00	.....
Grading, graveling, and paving	20,000 00	.....
Embankments (temporary)	5,000 00	.....
Roads and rail-tracks	5,000 00	.....
	500,000 00	.....
NAVY-YARD, NORFOLK, VA.		
Timber-shed No. 32	35,000 00	.....
Timber-shed No. 33	35,000 00	.....
Chain and cordage store No. 12	20,000 00	.....
Railroad and engine-house	15,000 00	.....
Extension of quay-wall	20,000 00	.....
	125,000 00	.....
NAVY-YARD, PENSACOLA, FLA.		
Timber-shed No. 11	38,356 00	.....
Steam engineering machine-shop	86,644 00	.....
	125,000 00	.....
NAVY-YARD, MARE ISLAND, CAL.		
For continuation of dry-dock	400,000 00	.....
For removal of gas-holder and gas-works	6,750 00	.....
For completing water-mains and service-pipes from reservoir	27,462 00	.....
For roads and pavements and railways	25,000 00	.....
For extension of timber-shed No. 94	20,000 00	.....
For dredging and scowing	100,000 00	.....
For quay-wall and wharves	50,000 00	.....
	629,212 00	.....
NAVAL STATION, KEY WEST, FLA.		
For building wharf	30,000 00	.....
NAVY-YARD, PORTSMOUTH, N. H.		
One clerk	1,400 00	.....
One clerk	1,300 00	.....
One writer	1,017 75	.....
One mail-messenger	700 00	.....
	4,417 75	.....
NAVY-YARD, BOSTON, MASS.		
One clerk	1,400 00	.....
One clerk	1,300 00	.....
One writer	1,017 75	.....
One mail-messenger	700 00	.....
	4,417 75	.....
NAVAL STATION, NEW LONDON, CONN.		
One writer	1,017 25	.....
NAVY-YARD, BROOKLYN, N. Y.		
One clerk	1,400 00	.....
One clerk	1,300 00	.....
One writer	1,017 25	.....
One writer	939 00	.....
One mail-messenger	700 00	.....
One draughtsman	1,565 00	.....
	6,921 25	.....

Estimate of appropriations required for the service of the fiscal year, &c.—Continued.

Detailed objects of expenditure and explanation.	Estimated amount which will be required for each detailed object of expenditure.	Amount appropriated for the current fiscal year ending June 30, 1877.
NAVY-YARD, LEAGUE ISLAND, PA.		
One clerk	$1,400 00	.....
One clerk	1,300 00	.....
One writer	1,017 25	.....
One writer	939 00	.....
One mail-messenger	700 00	.....
One draughtsman	1,565 00	.....
	6,921 25	.....
NAVY-YARD, WASHINGTON, D. C.		
One clerk	1,400 00	.....
One clerk	1,300 00	.....
One writer	1,017 75	.....
One mail-messenger	700 00	.....
	4,417 75	.....
NAVY-YARD, NORFOLK, VA.		
One clerk	1,400 00	.....
One clerk	1,300 00	.....
One writer	1,017 25	.....
One writer	939 00	.....
One mail-messenger	700 00	.....
	5,356 25	.....
NAVY-YARD, PENSACOLA, FLA.		
One clerk	1,400 00	.....
One writer	1,017 25	.....
	2,417 25	.....
NAVY-YARD, MARE ISLAND, CAL.		
One clerk	1,400 00	.....
One clerk	1,300 00	.....
One writer	1,017 25	.....
One writer	939 00	.....
One mail-messenger	700 00	.....
One draughtsman	1,565 00	.....
	6,921 25	$42,807 75

NO. 4. BUREAU OF NAVIGATION.

NAVY DEPARTMENT, BUREAU OF NAVIGATION,
October 30, 1877.

SIR: I have the honor to submit the following report of the Bureau of Navigation for the past year, together with the estimates for its support, and for the expenditures that will probably be required in that division of the naval service committed to its immediate charge, for the fiscal year ending June 30, 1879. Included in this report and transmitted herewith are the reports and estimates of the several offices under its cognizance, and an abstract of offers for supplies received.

NAVIGATION.

The Navy is now fairly supplied with the new liquid compass for any ordinary contingency of increase of force afloat. The best dry compasses have been retained for use, should any extraordinary exigency arise.

Your attention is called to the appended report of Prof. B. F. Greene, who is charged with the superintendence of compasses and of other magnetic matters in the Navy. His views and recommendations relative to magnetic surveys are fully approved by this bureau, having a special fitness at the present time.

The Navy has hitherto done very little, relatively, in making magnetic observations of the class referred to by Professor Greene. It seems but right, to say the least, that we should perform a proportional part of this service, one that has been hitherto mainly performed by other navies, and which, in the nature of things, can only be properly done by national vessels. The results, as a whole, are for the common benefit of all who may derive advantage from the promotion of nautical science and the improvement of nautical methods.

With your approval this bureau purposes to have all of our ships on special cruises, as well as many of those attached to foreign stations, take a part in the work of collecting such data, by magnetic observations, as shall be found most suitable to the object in view, both at sea and in port; the data thus collected to be periodically forwarded to this bureau in the manner of other similar returns. The duty each day will not be an arduous one, and, if carried out in a systematic manner, will result in a large aggregate of useful data for the improvement of our magnetic charts.

The requisite instruments for supplying all of our vessels-of-war to make these observations in the best manner would require too heavy an expenditure to be borne by the ordinary annual appropriation for instruments. A sufficient number of them will be obtained to commence fairly, and, if required, additional appropriations will be asked next year to supply in full all of the instruments found best adapted to effect the work with the necessary precision.

This bureau has now 108 condemned box-chronometers, which cannot be sold at auction without the risk of their being purchased for use at sea by merchant vessels, and should this occur many losses by shipwreck would result. It is respectfully suggested that authority be given to this bureau to sell a given number of them at a nominal price of, say, twenty dollars each, to such institutions of learning as may wish them, and would guarantee their employment at the institutions only.

HYDROGRAPHY, CHARTS, AND BOOKS.

The Hydrographic Office is now able to supply most of the charts required by our commercial marine, and is extending its publications as the appropriations will warrant, substituting engraved charts for those produced by photolithography. The report of the Hydrographer, herewith appended, states satisfactorily and in detail the work in progress.

The telegraphic longitudes determined by Lieutenant Commander F. M. Green, and other accurate observations in the West Indies, were completed last year as far as facilities existed. The results are entirely satisfactory, and are now published.

With a view of contributing to the safety of navigation, the department has assigned the store-ship Guard to determine longitudes telegraphically between Lisbon, Madeira, Cape de Verde Islands, and Pernambuco, thence extending south to Buenos Ayres and to the west coast of South America. Upon the completion of that labor Pernambuco and the island of Trinidad will be joined telegraphically, thus completing a double determination, and confirming both lines at the island of Trinidad.

The United States Steamer Huron, Commander G. P. Ryan, commanding, has been advantageously employed in carrying chronometer longitudes from the island of Trinidad along the northern coast of South America, and in making surveys where found necessary; she is now fitting out, under your instructions, to resume this work at the proper season on the south side of the island of Cuba, and such other localities in the West Indies as may be designated by the Hydrographer.

The United States Steamer Gettysburg, Lieut. Commander H. H. Gorringe, commanding, is now most usefully employed in collating information and making surveys to facilitate navigation in the Mediterranean Sea. In making the voyage from the United States, Lieutenant-Commander Gorringe had the satisfaction of discovering a bank in the open ocean, about one hundred and thirty miles from Cape St. Vincent, the shoalest known part of which has thirty-two fathoms of water. A second examination was made by him without obtaining further results, except more extended soundings. This bank has since been surveyed by Her Britannic Majesty's Ship Salamis, without finding shoaler water.

The United States Steamer Essex is now engaged, under your instructions, in making a series of deep-sea soundings between the United States and the coast of Africa, and thence via St. Helena to the coast of Brazil.

The United States Steamers Adams and Frolic were engaged, under your orders, in looking up the Madeiros Rock and Hotspur Bank, on the coast of Brazil, without further success than the discovery of another bank. The search, however, was not sufficient to warrant eliminating the dangers sought.

No special appropriations have been made for any of the above surveys. Whatever special instruments have been required in the prosecution of these works have been purchased from the funds of this bureau.

For a series of years this bureau has endeavored, without success, to obtain appropriations for the purpose of purchasing or building suitable vessels for making a survey of the North Pacific Ocean.

These vessels would serve the purpose of vessels-of-war among the islands, and, under instructions, could proceed wherever irregularities existed, as has been the case recently under our flag in the South Pacific.

It is quite within the bounds of probability that, had these vessels been appropriated for when first asked, the Pacific Mail Steamer City of San Francisco would not have been lost near what is known as the Tartar Shoal, eighty-five miles east-south-east of Acapulco. An English steamer has also been lost on Fanning's Reef, lying in the North Pacific Ocean, within this time, and doubtless other vessels, due to a want of proper geographical location of dangers and of knowledge of the currents of that ocean.

These losses will not only continue but increase in number as long as the same lack of geographical knowledge exists in those seas. In my report of 1875, the following appears: "The survey of the North Pacific Ocean is a necessity; without it the loss of life and property will yearly increase; and as the ocean binds our coasts, it should be our pride, as it is our interest, to lessen the dangers of its navigation as much as possible," which unhappily has been verified, and will continue to be until the necessary surveys are made.

No appropriations have yet been made for publishing the careful instrumental survey of the Isthmus of Panama made by Commander E. P. Lull, United States Navy, assisted by Civil Engineer A. G. Menocal and a party of naval officers; nor for publishing the instrumental location of an inter-oceanic ship-canal by Lieut. F. Collins, United States

Navy, and naval officers under his command, along what is known as the Atrato-Napipi route.

Although perhaps comparatively small value may be attached to these surveys in a practical point of view, they are well executed and in every way worthy of publication. They reflect great credit on the officers commanding the parties, as well as their subordinates.

SIGNALS.

For the past four years, under the more immediate charge of the Chief Signal Officer, whose appended report will be read with interest, this bureau has endeavored to improve night and fog signaling, and feels assured of the progress made.

A system of projecting stars to a considerable height, usually known as "Roman candles," of two colors, was given in an official report by Lieut. E. W. Very, United States Navy, to the Chief Signal Officer in August, 1874, but, not having been acted on by him, nor brought to the knowledge of this bureau, laid dormant until recently. It promises many advantages over any system of night-signaling now in use by us.

A "siren" for sounding course-signals automatically, as well as for other use, was designed and made by Messrs. A. & F. Brown, of New York, at the instance of this bureau. By means of brakes, air is compressed and either made to escape automatically, whistling with precision combinations of sounds indicating the course steered *within one point* or less; or the automatic arrangement is detached and the instrument used orally, as flags are used visually, in spelling out what may be desired, or, conventionally, in any other manner agreed upon. It supplies what nothing else will to the same degree, namely: a ready and reliable means of communicating intelligence in fogs, at least within distances where collision is imminent.

Two sirens have been made, the first with a single note, the second having two, differing in tone. It is proposed to designate automatically each of the four quadrants by notes, as well as the course steered, within one point or less, by another tone.

Without wishing in any degree to be officious as regards the merchant marine and its fitments, it seems proper for this bureau to indicate for examination or to give publicity to whatever seems likely to advance either the safety or other interests of the commercial marine.

The electric light shows promising advance; little more seems necessary to establish its use on board of vessels-of-war. It is too expensive still for ordinary use in time of peace, but would be considered indispensable to efficiency in time of war. It possesses the utmost capacity for signaling. The rays can be projected on the clouds, or they appear like a great arm of light moving to the right or left, the combinations in movement being all that is necessary for distinct signaling at great distances.

This bureau has invited a proposal for an electric machine of 3,000 candle-power, with the enginery, lamp, &c. If the amount asked for its construction is reasonable, the question will be considered.

SIMULTANEOUS METEOROLOGICAL OBSERVATIONS.

At the request of General A. J. Meyer, Chief Signal Officer of the Army, the department directed the co-operation of all of our vessels-of-war and naval stations, which order has gone into operation as far as possible with the present instruments loaned by the Army Signal Office. To properly effect the object, however, a small annual appropriation now asked for will be necessary.

NAVAL OBSERVATORY AND NAUTICAL ALMANAC.

The report of the Superintendent of Naval Observatory will doubtless receive the careful consideration which it merits, and the report of the Superintendent of the Nautical Almanac gives the information as to what is necessary to increase the usefulness of that work, and to secure its preparation for publication.

OFFICE OF DETAIL.

It is proper to add that the Navy, by request of the Treasury Department, and under existing laws and usage, has detailed eighteen officers upon light-house duty, principally as inspectors, and forty-seven for service in the United States Coast Survey, which affords a most useful employment, and highly advantageous in promoting the professional status of the officers.

It furnishes also eight officers, authorized by special act, for school-ships for the cities of New York and San Francisco.

The maintenance of these officers, usefully and properly employed in furtherance of other departments of the government, is nevertheless borne by naval appropriations; it is worth while to state the fact, as so considerable a number of officers are performing other functions than naval duty, yet supported from naval appropriations.

Respectfully submitted.

DANIEL AMMEN,
Chief Bureau Navigation.

Hon. RICHARD W. THOMPSON,
Secretary of the Navy.

OFFICE OF SUPERINTENDENT OF COMPASSES,
BUREAU OF NAVIGATION,
Washington, October 20, 1877.

SIR: I have the honor to submit herewith the following report for the current year.

THE NAVY COMPASS.

Relative to the compass itself, I have nothing to report beyond the renewed statement of its continued excellence as shown by the routine tests of inspection at the compass observatory. Some recent suggestions have been presented by the maker of the Azimuth Circle (used upon the Navy compass) looking to the substitution of a fixed prismatic reflector for the lower black glass reflector of this instrument. The idea is a good one in several particulars, as promising a much better illumination with a more simple and more stable construction, if it can be realized without special disadvantage. It is also proposed to have all the prisms, both eye and object, so mounted as to be readily removable for more thorough cleaning, and as readily replaceable, without risk of appreciable derangement of their adjusted positions. A circle embodying these suggestions is being prepared for examination and trial.

Under the head of Compass Inspection, and that of the Magnetism of Ships and Compass Deviation, I have nothing special to report at this time in addition to the usual routine service. I beg, however, to present certain considerations bearing upon another subject, intimately

connected with that last mentioned, upon which I have had the honor of several informal conversations with you during the past year, which seems to me of sufficient importance to demand our earliest attention.

MAGNETIC SURVEYS.

The discrepancies frequently found between the results obtained from careful observations of the magnetic variation and those deduced by applying the assigned secular change to the variation given by our magnetic charts, even upon the frequented tracks of commerce, are sufficient to show that errors in the use of this most important aid to navigation are liable to occur, either from inaccurate epochal values or from erroneous assumptions as to the secular change, or from both combined.

With such an experience, magneticians have no reason to be greatly surprised. Even in regarding the original determinations of this element as sufficiently accurate, they were neither sufficiently numerous nor sufficiently well distributed to give to the chart constructions a precision at all points equal to that of the observations themselves. But, in reality, the presumption of the general accuracy of these determinations cannot be admitted; for, besides having been derived from observations at various antecedent dates, extending over many years, and therefore liable to considerable uncertainties with every attempt at reduction to a common epoch, the determinations from sea observations, at the least, were subject to defects from various sources in the circumstances of the observation. If, then, in addition to the probable uncertainties of the values actually given upon the chart at the epoch of its formation, we take into consideration the difficulties which attend the correct estimate of the annual or secular change, commonly more than a tenth of a degree, but varying in different places and at different times in the same place, it may not be difficult to see that at the best the accuracy of our magnetic charts and tables must be accepted with considerable qualification. In all this there is no intention to depreciate the value of these helps to the navigator. Even with their acknowledged imperfections they are believed to be generally reliable within limits that make them indispensable to him. Moreover, they are probably not only the best that could be had from the data available for their construction, but the data themselves are perhaps as reliable as could be expected from the circumstances of their origin.

Reference has been made more particularly to the magnetic variation, which, in view of its relatively greater importance in the ordinary reductions of the navigator, is more immediately appreciated by him; but the general bearing of what has already been said applies with equal force to the other two elements of terrestrial magnetism, namely, the magnetic dip and horizontal intensity, the important uses of which are becoming more and more manifest in these later times to intelligent navigators in many of the practical problems which concern the judicious management of our iron ships.

It must therefore be tolerably evident that, in order to perfect our magnetic charts and tables, and to make them in the highest sense reliable and satisfactory for practical use, the necessity exists for a continual extension and renewal of magnetic observations for many years to come; or, at the least, until, first, a sufficient number of well-distributed and carefully-observed determinations of all the magnetic elements shall have been made in addition to those already obtained; and, secondly, such opportunities shall have been furnished for general discus-

sion of the elements obtained at different epochs, as shall suffice for *reliable values of the annual change*, which, it may be repeated, is at present the desideratum, and which can only be had by means of *sufficient data at different epochs*.

The observations at sea, which furnish by far the larger number of magnetic determinations at well-separated independent positions, have hitherto been and must continue to be mainly made by the naval officers of the several maritime governments. Even at numerous stations on shore, serving as bases for the observations made at sea, as well as from often being less conveniently accessible to other observers, the work must be done principally by naval officers. As is well known, systematic observations for the three elements of terrestrial magnetism have been made by the British navy for many years past; these observations forming a part of the daily routine on board of all sea-going ships; and it is due to that service to say that, but for the appreciation and foresight of the British Admiralty in providing the requisite facilities, and the persevering zeal of British naval officers in this class of observations, we should not have had sufficient materials up to the present time for the construction of a tolerable magnetic chart, even of the variation alone.*

Unfortunately, we cannot say much in relation to the work hitherto performed by our service in this field. With the exception of an occasional naval expedition, when magnetic observations formed a part of the scientific duty on board, we can hardly claim to have done anything toward observing for the three magnetic elements; the most which has been done by our ships on general service, consisting of occasional determinations of the magnetic variation. Even these observations, as made on board ship, have too rarely been accompanied by the requisite care in the treatment of the associated observation, instrumental, and deviation errors, to permit much reliable use to be made of them in chart-making. But these shortcomings, if they may be so called, do not appear to be properly chargeable to the naval officers themselves, so much as to various circumstances more or less outside of their control, which need not now be particularized. It is undoubtedly sufficient to recognize our duty at the present time, and, if we may, to make amends for past deficiencies. And surely, in view of the important benefits to navigation to be derived from the possession of a complete system of accurate magnetic charts or tables, there is no reason for doubt that the officers of the United States Navy will be found both ready and desirous, if furnished with suitable facilities, to render at the least their proportional meed of service toward the accomplishment of this object. Incidentally, also, it will not, perhaps, be forgotten that there is a higher plane from which to look at this subject than that of the merely economic or practical, however important in itself; and this is, the possibility of contributing some acceptable data as material for the use of the magnetician, in those theoretical discussions which not only conduce to the

* It is true that magnetic charts of all the elements were constructed by GAUSS upon the basis of the few observations then available (about forty years ago), with the aid of his general theory of terrestrial magnetism, which represented with remarkable accuracy the few facts of observation. But although he thus established the complete success of that celebrated investigation, yet, admirable as it was from every point of view, it was not expected, and certainly not by him, that its results should supersede the necessity of further observation. On the contrary, it was only expected that it might serve as a useful auxiliary to the results of actual observation, in supplying data for places where observations were wanting and necessary to an equalized distribution of the data in the construction lines of a chart. Beyond that such a theory could not be expected to go, as its own constant elements must depend on the accuracy, number, and distribution of the data derived solely from observation.

advancement of science, but, with every step of progress, are also certain to react more or less quickly in the improvement of the means and processes of useful application.

The magnetic observations which would be contributed by the Navy consist, in part, of those made on shore at the usual ports of outfit and of subsequent entry, and occasionally (as found expedient) at intermediate landings, these stations serving as bases for the much larger part of the observations made on board at sea. The observations on shore need to be made with every practicable care and attention to precision of results, those for intensity being absolute determinations; while the observations on board, made at determined positions on each track from one base to another, necessarily require correction for the magnetic action of the ship, those for the intensity being in this case only relative determinations; all the observations for each track being brought by subsequent reduction into co-ordinate relation to those of the bases at its extremities.

For these observations certain instruments and fittings will be required in addition to the usual outfit now put on board. The expense of such extra equipment will be moderate, in reality bearing only a very small part to that of the whole outfit of instruments issued to the navigation department. Even the whole of this expense need not be incurred at first; but a certain number of sets of apparatus might be provided, say sufficient to supply the outfitting ships of one year; or, so as to give to each its complement of instruments for this service, when otherwise equipping for a foreign station or for a special cruise, and at the same time to provide for the requisite preliminary base observations at the port of outfit.

The resulting observations, arranged upon printed forms, with all the data, direct or otherwise, relating to them, should be periodically forwarded to the Bureau of Navigation with as much frequency as may be found practicable, in order that timely examinations may be made, and any suggestions bearing upon a particular case promptly sent forward to the ship.

I am, sir, very respectfully, your obedient servant,

B. F. GREENE,

Professor of Mathematics, U. S. N., Superintendent of Compasses.

Commodore DANIEL AMMEN, U. S. N.,

Chief of Bureau of Navigation, Navy Department.

Estimate of appropriations required for the service of the fiscal year ending June 30, 1879, by the Bureau of Navigation.

FOR THE SUPPORT OF THE BUREAU OF NAVIGATION.

For salary of chief clerk. (Revised Statutes, page 69, section 416, and act of August 15, 1876)	$1,800
For salary of one clerk of third class. (Revised Statutes, page 26, section 167, and act of August 15, 1876)	1,600
For salary of one clerk of second class. (Act of August 15, 1876)	1,400
For salary of messenger. (Act of August 15, 1876)	840
For salary of laborer. (Act of August 15, 1876)	720
For contingent expenses	800
Total	7,160

Estimates of appropriations required for the service of the fiscal year ending June 30, 1879, by the Bureau of Navigation.

A.

I.—For Navigation.

For foreign and local pilotage and towage of ships of war	$55,000 00
For payment of canal-dues and other charges incidental to passing through canals (inapplicable to any other purpose)	7,000 00
For services and materials in correcting compasses on board ship, and for adjusting and testing compasses on shore	3,000 00
For nautical and astronomical instruments, nautical books, maps, charts, and sailing-directions and repairs of nautical instruments for ships of war	10,000 00
For instruments for taking simultaneous international meteorological observations on board ships of war	1,000 00
For books for libraries for ships of war	3,000 00
For navy signals and apparatus, namely: signal-lights, lanterns, rockets, including running-lights, drawings, and engravings for signal-books	6,000 00
For compass-fittings, including binnacles, tripods, and other appendages of ships' compasses	3,000 00
For logs and other appliances for measuring the ship's way, leads and other appliances for sounding	3,000 00
For lanterns and lamps and their appendages for general use on board ship, including those for the cabin, ward-room and steerage, for the hold and spirit-room, for decks and quartermasters' use	5,000 00
For bunting and other materials for flags and making and repairing flags of all kinds	5,000 00
For oil for ships of war, other than that used for the engineer department, for candles when used as a substitute for oil in binnacles, running-lights, for chimneys and wick, and for soap used in the navigation department	20,000 00
For stationery for commanders and navigators of vessels-of-war and for use of courts-martial	2,000 00
For musical instruments and music for vessels of war	1,000 00
For steering-signals and indicators, and for speaking-tubes and gongs for signal communication on board vessels-of-war	2,000 00
Total	126,000 00

II.—For Navigation, Contingent.

For freight and transportation, postage and telegraphing on public business, advertising for proposals, packing-boxes and materials, and all other contingent expenses	$3,000 00

III.—For Navigation, Civil Establishment.

For civil establishment in the navigation departments of the several navy-yards, namely:

Portsmouth	$1,300 00
Boston	1,400 00
New York	1,400 00
Leagne Island	1,300 00
Washington	1,400 00
Norfolk	1,300 00
Pensacola	1,017 25
Mare Island	1,300 00
Total	10,417 25

IV.—For Navigation, Hydrographic Work.

For drawing, engraving, purchase of chart-paper, printing and reproducing charts; correcting plates; preparing and publishing sailing-directions and other hydrographic information	$50,000 00
For fuel, lights, and office furniture; care of building and other labor; purchase of books for library; drawing materials and other stationery; postage, freight, and other contingent expenses	5,000 00

For rent and repair of building	$2,800 00
For contingent expenses of the expedition for the determination of longitudes by electric cable, viz: for paying telegraphic operators; expenses of detention of parties on shore, and travel	2,500 00
Total	60,300 00

B.

I.—For Naval Observatory.

For three assistant astronomers: one at $1,500, during first five years; one at $1,800, during second five years; and one at $2,000, during third five years	$5,300 00
For one clerk	1,800 00
For one instrument-maker, three watchmen, one messenger, and one porter; keeping grounds in order; repairs of buildings and inclosures; fuel, light, and office-furniture; chemicals for batteries; stationery, freight, and all other contingent expenses	13,500 00
[Note.—The sum of $13,500 was for many years the amount annually appropriated. The reduced sum ($10,000) has proved inadequate to the maintenance of the establishment and the preservation of the buildings.]	
For reducing and transcribing astronomical and meteorological observations for publication	3,600 00
For professional books for the library	1,500 00
For turning-lathe and attachments necessary for repairs of astronomical instruments and for general work; to replace the present lathe, which is thirty years old and worn out	800 00
Total	26,500 00

II.—For Naval Observatory, Observations of Transit of Venus.

For illustrations of volume of observations of Transit of Venus	$1,000 00

III.—For Naval Observatory, Catalogue of Stars.

For completing catalogue of stars from observations made by Lieut. J. M. Gilliss, chief of United States Naval Astronomical Expedition to the southern hemisphere, in 1851 and 1852	$2,500 00

IV.—For Naval Observatory, Observations of Solar Eclipse.

For observations of solar eclipse of July, 1878	$8,000 00

C.

I.—Nautical Almanac.

For pay of computers and clerk preparing for publication the American Ephemeris and Nautical Almanac	$19,000 00
For rent, fuel, labor, stationery, boxes, expressage, books, and miscellaneous expenses	1,500 00
For ephemeris of new planets discovered by American astronomers	3,000 00
Total	$23,000 00

[Note.—The diminished appropriation of $15,000 has proved insufficient for the annual computations of the Almanac, which are falling behind.]

RECAPITULATION.

Estimate of appropriations required for the fiscal year ending June 30, 1879, *by the Bureau of Navigation, Navy Department.*

FOR SUPPORT OF BUREAU.

Salaries and contingent	$7,160 00

FOR THE NAVAL SERVICE.

A.	I.—Navigation	$126,000 00
	II.—Navigation, contingent	3,000 00
	III.—Navigation, civil establishment	10,417 25
	IV.—Navigation, hydrographic work	60,300 00
B.	I.—Naval Observatory	26,500 00
	II.—Naval Observatory, observations, transit of Venus	1,000 00
	III.—Naval Observatory, catalogue of stars	2,500 00
	IV.—Naval Observatory, observations of solar eclipse	8,000 00
C.	I.—Nautical Almanac	23,500 00
	Total	$261,217 25

ABSTRACT OF OFFERS FOR SUPPLIES RECEIVED FOR FURNISHING ARTICLES COMING UNDER THE COGNIZANCE OF THE BUREAU OF NAVIGATION.

Stationery.—Bureau's order of November 20, 1876.

Sears & Cole*	$1,447 95	Wilbur & Hastings	$1,545 20
W. H. Arthur & Co	1,480 90	Nathan Lane	1,701 70
Thomas & Hagar	1,503 77	Alexander Agar	1,735 28
E. A. Kingsland & Co	1,525 01		

Eight thousand gallons lard-oil.—Bureau's order of January 9, 1877.

Manhattan Oil Company,* per gallon	$0 97½	Wm. A. Cole & Co., per gallon	$0 98
		E. T. Howe, per gallon	98⅝

Ten thousand gallons lard-oil.—Bureau's order of July 27, 1877.

Manhattan Oil Company,* per gallon	$0 78¼	E. T. Howe, per gallon	$0 78⅝
		J. H. Walker, per gallon	79¼

Stationery.—Bureau's order of August 18, 1877.

Arthur & Bonnell*	$1,199 03	W. H. Dempsey	$1,308 25
Thomas & Hagar	1,229 72	P. W. Derham	1,334 27
Wilbur & Hastings	1,277 64	Sears & Cole	1,337 77
E. A. Kingsland & Co	1,305 67	Alexander Agar	1,680 66

UNITED STATES NAVAL OBSERVATORY,
Washington, October 23, 1877.

SIR: In compliance with the instructions of the Bureau of the 11th instant, I have the honor to submit a report of the operations of the Naval Observatory for the past year.

TRANSIT INSTRUMENT AND MURAL CIRCLE.

During the year Prof. M. Yarnall has been engaged in observing with the transit instrument and the mural circle, observing alternately with each instrument, such star-places as were deemed necessary to complete the catalogue of 1845–1871.

The methods of observation and reduction have been such as were used in past years, and it is hoped that a second and more perfect edition of this catalogue will be published in the course of the coming winter and spring. The catalogue embraces all the observations made in the observatory with the old instruments by all observers, and forms an epoch in the annals of the observatory. His time has been completely employed in these observations and in the reduction of the stars from the epoch of each year to that of 1860, the epoch of the catalogue. He has been assisted during the year by Lieut. E. W. Sturdy, whose

*Accepted.

valuable services he takes pleasure in acknowledging. Mr. D. P. Todd was kind enough to observe for him several evenings without special assignment.

MOTION OF THE MOON.

The work of Prof. Simon Newcomb on this subject, after suffering an interruption of some years, was recommenced in 1876. That part of it which consists of a new reduction and examination of all recorded eclipses and occultations of value before 1750 is substantially complete, the most of it being in the hands of the printer. The ancient observations, which have been considered most reliable, indicate a correction of more than half an hour to the times of ancient eclipses as hitherto calculated from the tables. This correction so changes the computed paths of the moon's shadow during total eclipses, that the chronological questions involved in them will no doubt have to be re-examined. The most remarkable result of the research is, that the motion of the moon during the past 250 years may be very closely represented by the alteration of a single term in Hansen's Tables. The question whether this alteration is admissible in the Theory cannot yet be decided.

TWENTY-SIX-INCH EQUATORIAL.—(In charge of Prof. Asaph Hall, with Prof. E. S. Holden as assistant.)

This instrument has been employed the past year in the observation of the satellites of Saturn, Uranus, and Neptune, in observing double stars, and several comets. The observations of these satellites and comets have been published in the Astronomische Nachrichten. As the satellites of Uranus and Neptune have now been observed for several years with this instrument, and tables of their motions have been computed, it does not seem worth while to continue the observations of these satellites at the present time. In the year 1882 the plane of the orbit of the satellites of Uranus will pass through the sun, and at that time the apparent orbit of the satellite of Neptune will have opened so much that this satellite can be observed with ease in all parts of its orbit. It seems better, therefore, to give up, until the year 1881, the observations of the satellites of these two planets. In that year another and complete series of observations of these systems should be undertaken with this instrument. The fainter satellites of Saturn should be followed with this instrument for several years; and the curious phenomena connected with the ball and ring of this planet are also worthy of careful observation.

The list of thirty double stars selected by Mr. Otto Struve, director of the Pulkowa Observatory, for the purpose of comparing the measures of different observers, has been observed by Professor Hall, and about two-thirds of the requisite number of observations have been made. This work will be finished during the next year.

The two satellites of Mars, discovered by Professor Hall in August, have been observed on nearly every clear night since their discovery, the date of the last observation being October 15, and the observations made at the Naval Observatory alone will give a good determination of their orbits. It seems now quite certain that these satellites will be visible again in October and November, 1879, and observations in that year will serve to fix their periods with accuracy.

This instrument is now in good working condition. Since the change in the bearing of the shaft of the driving-clock, made in July, 1876, the performance of the clock has been much better. It is doubtful if it be

sufficiently steady for photographic or spectroscopic work, but it answers very well for micrometrical measurements.

The dome is now moved with considerable difficulty, probably on account of inequalities in the settling of the supporting walls. This should be remedied in some way.

During the next year, an equatorial telescope, having an aperture of 27 inches, will be mounted at Vienna; and the telescope made by Messrs. Alvan Clark & Sons for Mr. McCormick, and which is a little larger than ours, is ready for mounting. Under these circumstances, it is worth while to consider whether it would not be advangeous to establish a branch observatory on some of the elevated plains in the central part of this country. It seems probable that a good location might be found between the parallels of thirty and thirty-five degrees of north latitude, near the projected line of the Southern Pacific Railroad. Should such a location be found, at an altitude of six or eight thousand feet, its advantages might more than compensate the increased size of other telescopes. A branch observatory could be established in such a locality, and our 26-inch equatorial could be mounted and used in such an observatory, for five or ten years, at no great increase of cost. Until some such thorough experiment be made, it is certain that the question of what is to be gained by observing at a station which is above a large part of our atmosphere will remain undecided.

A monograph on the central and brightest regions of the nebula of Orion is in preparation, and is now nearly completed, by Professor Holden. The observations on which this depends have been made with the 26-inch equatorial during the oppositions of 1874, 1875, 1876, and 1877, and will furnish data for determining the positions and boundaries of all the brighter nebulous masses. In connection with this, all previously published (and many unpublished) descriptions, drawings, and observations have been collected and studied, with the object of giving in one memoir a complete history of this nebula from its discovery in 1618 to 1878, a period of 260 years.

In order to present this evidence properly a series of wood-cuts or lithographs will be required, giving the most important features of the following drawings:

DRAWINGS OF THE NEBULA OF ORION.

No.	Observer.	Date.	No.	Observer.	Date.
1	Huyghens	1656	17	Rondoni	1841
2	Picard	1673	18	Lassell	1847
3	Huyghens	1694	19	W. C. Bond	1848
4	Mairan	1731	20	Lassell	1854
5	Long	1742	21	Liaponoff	1847
6	Le Gentil	1758	22	Struve	1851
7	Messier	1771	23	Secchi	1862
8	W. Herschel	1774	24	Tempel	1862
9	Lefebvre	1779	25	G. P. Bond	1865
10	Schrœter	1794	26	Rosse	1867
11	do	1797-'8	27	Secchi	1868
12	Bode	?	28	D'Arrest	1872
13	J. Herschel	1824	29	Winlock	1874
14	do	1837		Trouvelot	
15	Lamont	1837	30	Holden	1876
16	De Vico	1839		Trouvelot	

Besides the above published drawings (a complete set of which is contained in no library in the world) several important unpublished

original drawings have been communicated, in particular the elaborate drawing made by William Lassell, esq., with his 4-foot reflector, in 1862.

The trifid nebula (G. C. 4355) has been studied in the same way, and the results have been published in the American Journal of Science, as the Naval Observatory had no funds to pay for the necessary illustrations.

TRANSIT OF VENUS.

The work done by Prof. William Harkness is as follows:

The investigation of the errors of scale A of the measuring-engine has been finished, and the errors themselves have been tabulated. In addition, the absolute value of the scale-divisions has been determined; and, as the greatest care was taken in doing this, the engine is now capable of furnishing as accurate measurements as can be obtained by any means known to science.

The photographs of the transit of Venus obtained by the United States parties have been examined, and all those which were capable of measurement have been read off. They were as follows:

Northern stations.—Wladiwostok, 13 plates; Nagasaki, 50 plates; Peking, 26 plates; total 89 plates.

Southern stations.—Kerguelen Island, 8 plates; Hobart Town, 38 plates; Campbell Town, 32 plates; Queenstown, 47 plates; Chatham Island, 7 plates; total, 132 plates.

The grand total for both hemispheres is 221 plates. Owing to the great variability of the photographic diameters of the Sun and Venus, it was found impossible to make use of any pictures which did not show a complete image of the Sun. This excluded several hundred small photographs taken near the times of contact between the limbs of Venus and the Sun.

The measurements of the photographs mentioned above have been so far reduced that the position-angles of Venus, relatively to the center of the Sun's image, and the positions of the Sun's image relatively to the centers of the plates, have been tabulated.

A method of determining the refractive index of a piece of plano-parallel glass has been devised, by means of which the refractive indices of all the reticule plates have been very accurately measured. These refractive indices, combined with the thicknesses of the reticule plates, are the data from which certain corrections to the measured focal distances of the photographic objectives have been computed. Their further reduction is under way, and it is expected that the reduction of all the observations of the transit itself will be brought to a close by the coming spring. It is also hoped that the observations for longitudes of stations will be reduced before the end of the fiscal year, and with the present appropriation. The volume of observations will require some illustrations, and an appropriation of $1,000 for this purpose has been asked for in the estimates.

Last spring some quantities relating to the Sun and Venus were tabulated, with a view to making a duplicate computation of the solar parallax, as derived from the photographs; but, for the present, that work has been abandoned.

THE TRANSIT CIRCLE.

This instrument, under the direction of Prof. J. R. Eastman, assisted by Assistants Edgar Frisby, A. N. Skinner, and H. M. Paul, has been employed in observations of—

1. Stars of the American Ephemeris, for clock and instrumental corrections.
2. Sun, moon, and planets.
3. Stars whose occultations were observed in connection with observations of the transit of Venus in 1874.
4. Standard stars for a catalogue of zone observations.
5. Stars used by Lieut. Commander F. M. Green in the determination of latitude in the West Indies.
6. Stars of the British Association Catalogue between 120° 0′ and 131° 10′ N. P. D.
7. Stars employed in observations of comets with the 26-inch and 9.6-inch equatorials.

Clock-signals, for the determination of longitude, have been exchanged with the following stations: Cincinnati Observatory, on five nights; Hale's Eddy, N. Y., on four nights, for Coast Survey; Nashville, Tenn., on thirteen nights, for Coast Survey; Columbus, Ohio, on six nights, for Coast Survey; Wellsburg, N. Y., on two nights, for Coast Survey; Great Bend Village, Pa., on four nights, for Coast Survey; Harrisburg, Pa., on five nights, for Coast Survey.

Observations of Mars, for the determination of solar parallax, according to a plan proposed by Professor Eastman in 1876, have been made whenever the weather would permit.

THE 9.6-INCH EQUATORIAL.

This instrument is under the charge of Professor Eastman, with Messrs. Frisby, Skinner, and Paul as assistants. It has been employed in the observation of occultations and in determining the approximate corrections to the ephemerides of such small planets as are not readily found with the transit-circle.

Several observations have been made of the five comets (*a*), (*b*), (*c*), (*d*), and (*e*), of 1877.

The outer satellite of Mars was easily seen by Professor Eastman with this instrument on August 21 and 28, and by Mr. Paul on October 1.

The *meteorological department* is under the charge of Professor Eastman; and the usual observations with the *barometer*, and the *dry*, *wet*, and *solar* thermometers have been made, commencing at midnight and recorded at each period of three hours after. The observations are made by the watchmen, Messrs. Hays, Horigan, and Cahill. The 200 extra copies of the observations for 1875 are ready for distribution to our meteorological correspondents, and the observations for 1876 are now ready for the printer.

The control of the system of wires within the Observatory connecting the various clocks, chronographs, &c., and of the connections with the wires of the Western Union Telegraph Company, is, as heretofore, in the hands of the officer in charge of the transit-circle, while the immediate charge of all the batteries, wires, and their connections is successfully confided to Mr. W. F. Gardner, the instrument-maker. The connections inside the buildings remain nearly the same as during the past year.

Beyond the Observatory, this department is responsible for the control, by means of the motor-clock, of several clocks in the State, War, Navy, and Treasury Departments, and for furnishing accurate time for signals to the Western Union Telegraph Company.

A thorough change in the method of controlling these clocks is required, and a proper and creditable distribution of time-signals will

require the use of another clock and a change in the present method of sending the signals. These changes will necessitate the expenditure of about five hundred dollars, which sum is asked for, for this purpose.

Condition of instruments and observing-room.—The transit-circle is in fair condition and requires only very small immediate repairs. The observing-room is in a bad condition, and grows worse every year. Nothing but an entire remodeling of the roof and shutters will make them safe or suitable for the purpose for which they were designed.

The 9.6-inch equatorial is in good condition, except that a new driving-clock is required. The dome is in good order, but the appliances are in a very bad condition—either worthless in design or worn out.

The meteorological instruments are in good condition.

The *distribution of publications and exchanges* is in charge of Prof. J. E. Nourse.

The printing of the annual volume for 1875 was begun as soon as the appropriation for 1877 was available, and it is now about half done.

Of the annual volume of the Astronomical and Meteorological Observations for the year 1874, more than 600 copies have been distributed to observatories and other scientific institutions and libraries, and an equal number of the "Instruments and Publications of the Observatory," issued at the time of the International Exhibition.

More than 400 volumes have been sent abroad, chiefly through the agency of the Smithsonian Institution. The acknowledgments for these, received from the chief scientific institutions of the world, have been expressed in very appreciative terms.

Exchanges have been fully maintained during the year, promoting the growth of the library by the acquisition of standard works. In building up a library of special character, the Observatory has been almost exclusively dependent on these exchanges. To meet the increasing demands upon it, arising out of its own extending work, and to secure its full usefulness to scientific persons seeking to avail themselves of its facilities, an appropriation has become necessary for the purchase of works not available through exchange. For this purpose the sum of $1,500 is asked for in the estimates.

The *library* occupies a space in the Observatory originally constructed for the location of one of the transit instruments. It is ill-suited for library purposes, and is now found to be entirely too small to accommodate even the volumes on hand.

NARRATIVES OF ARCTIC EXPEDITIONS.

The limited edition of the Narrative of the North Polar Expedition, prepared by the late Admiral Davis, has been nearly exhausted by the effort to supply geographical societies, public libraries, and individuals specially interested in Arctic exploration. A large number of applications for this work continue to be unwillingly declined; and it is very desirable that a new edition may be ordered by Congress, the cost of which, printed from the stereotyped plates, would be inconsiderable.

Under the orders of the Navy Department of February 17, 1877, the Narrative of the Second Expedition of the late Capt. C. F. Hall, called for by Senate resolution of February 6, is being prepared at the Observatory by Professor Nourse, with the assistance of Mr. R. W. D. Bryan, of the Polaris expedition.

An estimate of the sum required for the necessary maps and plates for this work, recommended by the department February 17, is before the Naval Committee of the Senate. The papers forming the material of this work are those purchased by Congress under the act of June 23, 1874.

CHRONOMETERS.

There are at present in the chronometer-room eighty-nine mean-time chronometers; fifty-four are ready for issue; nine are on trial, and twenty-six need repairs. There are also six sidereal chronometers, three of which are "break-circuit."

During the year, seventy-seven chronometers have been received, and sixty-one have been issued. Of these, thirty-four have been issued to vessels of the Navy.

There are also one hundred condemned chronometers stored away. Ten of the best of these have been selected, and are being cleaned and put in order, to be used as *hacks*.

In issuing chronometers to vessels it is customary to select three, by different makers, all having a regular rate, and one of the condemned ones as a "hack."

In September arrangements were perfected for dropping a time-ball in New York City at exact New York noon; and on the 10th of that month the ball was dropped from the chronometer-room for the first time. It has been dropped at New York mean noon daily, except Sundays, to the present time, without a single failure.

It may be of interest to remark that the time-ball at Deal, England, which is dropped by signal from the Royal Observatory at Greenwich, is subject to about fifteen failures annually, or to an average of 1.25 per month.

This New York time-ball is already used by the merchant shipping, and has been employed also by the navigator of the United States steamship Guard, now fitting-out at the Brooklyn yard, in rating the ship's chronometers.

The Baltimore Board of Trade contemplates the establishment of a similar time-ball at Baltimore, to be dropped at Washington mean noon daily, except Sundays; and it is to be hoped that similar time-balls may be established gradually at various other ports.

Very respectfully, your obedient servant,

JOHN RODGERS,
Rear-Admiral, Superintendent.

Commodore DANIEL AMMEN, U. S. N.,
Chief of Bureau of Navigation,
Navy Department.

OFFICE OF THE CHIEF SIGNAL-OFFICER OF THE NAVY,
Washington, D. C., October 29, 1877.

SIR: In compliance with the instructions of the bureau, I have the honor to submit the following report of the operations of this office for the past year:

The experimental practice in night-signaling, designed by Lieut. E. W. Very, United States Navy, promises greater advantages than any method now practiced by us. Indeed, with a proper attention to time intervals, it seems impossible that a signal can be misunderstood, whilst rapidity in execution and simplicity in the elements employed, as well as not disclosing the character of the vessel making the signal—illuminating her, all combine to favor this system. Experiments have been made with a lantern for burning magnesium and strontium combined, and, with good results, in flash-signaling.

The advances made in electrical machines indicate proximately a

wonderfully efficient and sufficiently economical appliance to insure its general employment on board of vessels-of-war. In consequence of the great increase of disasters that have occurred in thick or foggy weather by collision, it has been found necessary to devise a system of sound-signals adapted to the use of all sea-going vessels, to enable them to signal not only their position, but also the course steered, or within one point of it.

The two sirens ordered, one of which has been partially tested, promise special usefulness in fogs, through automatically whistling the course steered, or within one point, and otherwise, in phonetic general signaling.

The quarterly reports of the vessels in commission are highly satisfactory, showing that instruction in signals is no longer neglected.

Very respectfully, your obedient servant,

J. C. BEAUMONT,
Commodore and Chief Signal-Officer, United States Navy.

Commodore DANIEL AMMEN, U. S. N.,
Chief of Bureau of Navigation, Navy Department, Washington, D. C.

UNITED STATES HYDROGRAPHIC OFFICE,
Washington, September 8, 1877.

SIR: As directed by the bureau, I have the honor to forward herewith the estimates of this office for the fiscal year ending June 30, 1879.

An estimate for the contingent expenses of the expedition for the determination of longitudes, by means of the electric cable, is herewith submitted. This embraces such necessary expenses as the payment of the services of the telegraph operators, the extra expenses of parties detained on shore by their work, and the necessary transportation of such parties.

During the fiscal year ending June 30, 1877, fifty-two charts have been prepared and photolithographed; fifteen prepared for engraving, nine of which are completed and six are in progress; twelve plates have received extensive corrections, and the greater number of the plates of the office have received minor corrections in lights, beacons, recently discovered shoals, &c. Five thousand three hundred and sixteen charts and one thousand two hundred and fifty-four books, publications of this office, have been sold to its agents, for the demands of commerce, in addition to those furnished to vessels of the Navy and the exchanges with foreign offices.

Hydrographic notices and notices to mariners have, as information was received, been printed and distributed. Directions for the navigation of the coast of Chili, Bolivia, and Peru, and Nos. 1 and 2 foreign light-lists have been printed and issued. Volume I, Directory for the West India Islands; Volume III, West Coast of Africa; Volume II of the English Channel, and the Report of the Expedition for the Determination of Longitudes through the West Indies, as also Nos. 3, 4, 5, and 6 corrected lists of foreign lights, are completed and ready for printing at such time as an appropriation for the purpose is available.

In the meteorological department of this office a wind and current chart of the North Pacific Ocean, from the coast of America to 180° of longitude, has been carefully compiled, under the direction of Lieut. T. A. Lyon, U. S. N., and is nearly ready for publication.

Every preparation has been made for the continuance of the work of determination of longitudes, and the party will be ready to start by the first of October next.

During the past year surveys of shoals, &c., and search for reported dangers to navigation, have been made by the United States Steamers Pensacola, Captain Gherardi; Vandalia, Commander Robeson; Frolic, Commander G. B. White; Adams, Commander F. Rodgers; Plymouth, Captain Barrett; Ossipee, Commander L. Breeze; and Gettysburg, Lieutenant-Commander Gorringe.

The work of the United States Steamer Gettysburg progresses favorably. When taking deep-sea soundings from the Azores toward the Straits of Gibraltar, an uprising of the bottom was discovered, and a survey of its extent made, showing the least depth to be 30 fathoms.

The United States Steamer Huron, Commander Ryan, has determined the following geographical positions on the north coast of South America and the outlying islands of Unare Bay: Testigos Islands; Puerto Santo Bay; Pampatar, island of Margarita; Cumana; Tortuga Island; Corsarios Bay; Orchila Island; Los Roques Islands; La Guayra; Puerto Cabello; Island of Curaçoa; Vela de Cora; Orange-Stadt; Estanquez Point; Bahia Honda; Cape La Vela; Santa Marta, and Cartagena; carrying the longitudes, chronometrically, between Port Spain, Island of Trinidad, and Aspinwall, the longitudes of which had been determined by means of the submarine cable by Lieut. Commander F. M. Green; the latitudes of these positions being obtained by circum-meridian altitudes of fixed stars. At the same time a survey was made of the harbor of Orange-Stadt by the officers of the United States Steamer Huron. This work was carefully executed, and reflects much credit upon those connected with it.

Respectfully,

R. H. WYMAN,
Commodore United States Navy, and Hydrographer.

Commodore DANIEL AMMEN, U. S. N.,
Chief of the Bureau of Navigation.

NAUTICAL ALMANAC OFFICE,
Washington, D. C., October 24, 1877.

SIR: In accordance with your instructions, I have the honor to submit the following report of the operations of this office during the past year:

During the year ending September 30 last, 175 copies of the large edition of the Almanac have been sold, and 676 copies have been distributed to the Hydrographic Office, to the various offices of the government which make use of it, and to astronomers and scientific institutions at home and abroad. Of the small or Navigators' Almanac, 3,405 copies have been sold or sent to agents for sale.

Since the last annual report of my predecessor the printing of both the small and large Almanacs for the year 1881 has been finished, and the stereotyping of the small Almanac for 1881 is now nearly complete.

The computations of the large Almanac for 1881 will be completed early next year. Those for 1882 are in arrears and cannot be completed with the appropriation of the present fiscal year, owing to the diminution of twenty-five per cent. in the sum appropriated for computation. A diminution in the price of some of the computations will be made as soon as is admissible under existing contracts, but a diminution of one-fourth in the cost of all the computations is not practicable. An increase of the appropriation has therefore been recommended in the estimates.

During the year the office has printed an extension of Damoiseau's

Tables of the Satellites of Jupiter (those now exclusively used in preparing ephemerides of those satellites), from 1880 to 1900, by Mr. David P. Todd. The original tables terminated with the year 1880, and the extension is on the part of Mr. Todd a gratuitous contribution to science, which he has presented to astronomers through this office.

The star tables of the Ephemeris have been extended to the year 1900 during the past year, and an addition of nine stars is being made to the standard list. I shall defer recommending that the extension be printed until it is ascertained that they are wanted for use by other institutions.

The most urgent want of the office at the present time is a set of tables of the moon and planets, corresponding in accuracy to the present state of practical astronomy, and founded on entirely homogeneous data. The tables of Mars, Jupiter, and Saturn, now used in the preparation of the Ephemeris are all more than half a century old, and the only recent ones existing are those of Le Verrier. These have never been introduced in the preparation of the Ephemeris because their form is such as to render them extremely inconvenient in use, and it is doubtful whether they fulfill the requirements of the astronomy of the present day in respect to precision. Should the whole appropriation asked for this year be granted, the calculations necessary for the object in question can be commenced as soon as that appropriation is available.

Very respectfully, your obedient servant,

SIMON NEWCOMB,
Professor of Mathematics, U. S. N., Superintendent.

Commodore DANIEL AMMEN, U. S. N.,
Chief Bureau of Navigation, Navy Department.

No. 5.—BUREAU OF EQUIPMENT AND RECRUITING.

NAVY DEPARTMENT,
BUREAU OF EQUIPMENT AND RECRUITING,
Washington, October 19, 1877.

SIR: I have the honor to submit herewith the annual operations of this bureau for the past fiscal year, with estimates for the fiscal year ending 30th June, 1879.

During the past fiscal year 73 vessels have been either wholly or partially equipped at the several navy-yards, at an expenditure of $635,775.60 as follows: For labor, $72,267.39; for material from stock on hand, $461,245.99; for material purchased during the year, $102,262.22.

Fifty-one thousand four hundred and seven tons of coal have been purchased at home and abroad for the use of the Navy, under this bureau, costing, including freight, $375,700.19.

Two hundred and twenty-one thousand seven hundred and twenty-five pounds of manila hemp have been purchased, costing $20,658.53.

The ropewalk at the Charlestown navy-yard has supplied the wants of the service with wire, hemp, manila, and hide rope.

The equipment-shops at the Washington navy-yard have furnished all the anchors and chains needed for the service.

There has been expended under appropriation "equipment of vessels," during the year, for labor in the several navy-yards, $195,456, and for coal, hemp, and other articles of equipment, $543,799.56, leaving a balance on hand July 1, 1877, of $230,744.44, from which are to be paid outstanding bills amounting to $80,000.

Under appropriation "contingent," equipment and recruiting, there has been expended $42,465.93, leaving a balance on hand July 1, 1877, of $32,534.07.

During the last fiscal year coal and freight, the largest items of expenditure under cognizance of this bureau, were remarkably low; a limited number of vessels were fitted out, and the bureau was enabled to draw its supplies in a great measure from stock on hand; consequently there remains to its credit the balance above shown.

But this stock has been greatly depleted and requires to be replenished, at least in part, during the present fiscal year, in order to meet demands in fitting for sea a number of vessels to relieve others in foreign waters.

In view of the foregoing, and the further fact that $100,000 of appropriation "equipment of vessels" for the current fiscal year was by act of the last Congress especially set apart for the immediate use of the Bureau of Provisions and Clothing, it is respectfully requested that Congress may be asked to make balances above referred to available for the current fiscal year.

WIRE-BOARD.

The board established at the Washington yard for testing iron and steel wire for hawsers and standing rigging, as mentioned in my last report, has not yet completed its labors. But, under date of October 4, 1877, it reports that one hundred and eighty-six (186) different sizes of various kinds of iron and steel wire have been received, and seven hundred and seventy (770) specimens cut from them have been tested with the greatest care; no definite comparisons can fairly be made until all the specimens shall have been tested. From the care and nicety with which the experiments have been conducted, and the voluminous data already obtained, the board is of the opinion that the whole when completed will embody a large amount of valuable information.

Until this board makes its final report no more wire will be purchased, unless absolutely required for immediate use in the manufacture of rigging, and no hawsers will be made until the manufacturers in this country present an article equal to that of English production. I have no doubt that this will be done as soon as they know the character of wire required.

CHAIN-IRON.

The necessity for reliable chain-cable for our ships is so apparent, and so many chains have been parted, from defective iron, within the last few years, thereby risking a large number of lives and a vast amount of public property, that I feel bound to urge upon the department the propriety of a law sanctioning the purchase of iron for the Navy whenever it can be obtained with a view to the peculiar qualities requisite for the purpose. The practice of purchase by advertisement, and from the lowest bidder, entails upon the government a serious expense and delay in testing iron, which, in most cases, fails to meet the requirements.

The iron-board at the Washington navy-yard is constantly testing the iron of any manufacturers who may desire it, and the department ought to have the authority to purchase the iron which has passed the tests established, in the most satisfactory manner, at its market-value.

ANCHORS.

Having brought the manufacture of chain-cable for the Navy into such condition as to warrant in future the required strength and tenacity, the bureau proposes, this year, to consider the subject of anchors.

The time seems to have come when some improvements upon the old anchor may be adopted with advantage; for this purpose, manufacturers and patentees will be invited to present anchors, or models of anchors to the commandant at the Washington navy-yard for comparative tests. We want them more readily stowed, not easy to foul, and capable of bearing equal strain with less weight of metal than the present cumbersome and somewhat crude anchor in use.

RECEIVING-SHIPS.

The receiving-ships Wabash, at Boston, Colorado, at New York, Franklin, at Norfolk, and Wyoming, at Washington, have passed satisfactory inspections.

The system of having ships in sea-trim, in preference to old hulks, as rendezvous for recruits at the naval stations has had a perceptibly beneficial effect upon the service. On board of these vessels the discipline of a man-of-war is maintained, while the men are given every opportunity for healthful amusement. The spirit of discontent which formerly prevailed at these places has almost disappeared, and desertions have very much decreased. I would recommend that the St. Louis, at Philadelphia, and Independence, at Mare Island, be replaced by vessels in reserve for sea-service, as at the stations before mentioned.

CONDUCT REPORTS.

The "conduct reports" to this bureau exhibit a manifest improvement in the conduct of the enlisted men of the Navy, and, as a consequence, the increased efficiency of the fleet in commission.

The number of desertions during the last fiscal year was 818; during the previous year, 1,203; showing a decrease of 385. These records exhibit, however, a great want of uniformity in the manner of punishing offenses, not only in different vessels of the same squadron, but in the same vessel at different times. Offenses are often punished without any apparent regard to the amount of criminality involved, particularly in cases of desertion.

It is believed that the board of officers now in session for a revision of the laws of the Navy will be able to recommend a code which will remedy these and other defects in the present naval laws.

More than three-fourths of the punishments inflicted in the Navy are for offenses committed by men under the influence of liquor. I am of the opinion that if intoxicated men were turned over to the medical officer of a ship for medical treatment, and only confined upon his recommendation, punishment would be very much lessened, and some of the very best men in the service would be saved to usefulness instead of spending months in the "brig," and perhaps years in the penitentiary, for offenses, which when sober they would never dream of committing.

On board of most ships of war, however, there are always a few men who, in the course of a cruise, exhibit uniform bad conduct. With such men punishment seems to have no beneficial effect, while their example is a constant provocation to others to do wrong. These should be discharged by sentence of summary court-martial, properly approved, wherever the ship on which they are serving may be found. The cost of transportation to the United States would be more than saved in the increased efficiency of the crew. They are known as Uncle Sam's hard bargains, and two or three of them can keep a ship in a constant state of turbulence and discontent.

HONORABLE DISCHARGES AND CONTINUOUS-SERVICE CERTIFICATES.

During the past fiscal year, 1,121 men were recommended and received "honorable discharges," and seven "medals of honor" were issued; six of the latter for saving, or attempting to save, persons from drowning, viz: To Alexander Parker (boatswain's mate), John Osborne, (ordinary seaman), Thomas Kersey (ordinary seaman), John Costello (ordinary seaman), William Corey (landsman), I. M. Frost (second class fireman), and one to John Levy (boy), for gallant and heroic conduct at Castle Garden fire, New York.

Two thousand six hundred and sixty-six continuous-service certificates have been issued to the Navy, out of which number 700 are now in the service.

The practice of giving certificates to any person, simply on account of length of service, has been abandoned; they are only issued now upon the recommendation of commanding officers.

The naval force is small, and it is desirable to obtain only those who merit this certificate by their conduct and proficiency.

ACCOMMODATION OF ENLISTED MEN ON SEA-GOING VESSELS.

I again respectfully ask the attention of the department to the restricted space allotted to the crews of our ships of war. As a matter of efficiency alone, the health of the men is of primary importance. A ship may be ever so perfect in its construction and armament, she loses her significance as a man-of-war unless manned by a vigorous crew. It is simply impossible to expect men to retain their health if compelled to berth and mess in the dense and mephitic atmosphere which is the natural result of their crowded quarters.

I have the honor to append herewith a diagram which exhibits the cubic feet of space allotted to officers and men on the berth-decks of these ships, representing different classes of the vessels in the Navy.

Ventilation of our ships has never received the attention it imperatively demands. I respectfully urge upon the department the propriety of appointing a board of medical officers to report upon the subject, and to devise a method whereby the object may be assured.

At present the "sick-bay" is thrust in the extreme forward end of a ship, and is eminently well calculated not only to make a man sick, but to keep him so, from its position, the absence of light and air, and the usual want of the convenience which a patient requires. I believe that the plan of placing the hospital of a ship in just the place where it ought not to be has been abandoned in every navy but our own.

TRAINING SYSTEM.

Five hundred and sixty-nine boys have been enlisted during the past year under section 1418 Revised Statutes of the United States. There are remaining on board of the training-ships 458, viz: On the Minnesota, at New York, 225; on the Constitution, at Philadelphia, 124, and on the Saratoga, at Norfolk, 109.

These boys have been under especial instruction and training with a view of preparing them for future usefulness, and the bureau is gratified at the favorable reports of their commanding officers.

Three hundred and twenty-four boys are serving on cruising-vessels, having passed into the general service, viz: Hartford, 73; Essex, 57;

Adams, 72; Marion, 17; Pensacola, 19; Trenton, 46; Monongahela, 40.

That these boys are doing their duty manfully is indicated by the fact that there is scarcely a ship in commission which has not applied for its quota, to take the place of the late landsmen of the Navy.

In pursuance of this policy, the bureau has also enlisted a small experimental class of boys for the "engineers' force." These are now making a practice-cruise on the Tallapoosa. Her commanding officer reports them "all, without exception, well-behaved and anxious to learn."

Under the present system, these lads can hardly be considered as of any expense to the government; in fact, taking the place of men of higher rates of pay in the cruising vessels, they might be considered as saving money to the service. If 750 (10 per cent. of the whole force of the Navy) are to be allowed, the additional amount of pay needed will be about $90,000.

As a proper adjunct to the present training system, and for the purpose of inciting the young seamen to master their profession by offering as rewards such positions as properly come within the limits of their ambition, I recommend that boys who have enlisted to serve in the Navy until twenty-one years of age, who have served out such enlistment, and have been recommended for a "good-conduct badge," may, upon re-entering under continuous-service certificate, be ordered to the Minnesota at New York, with the object of going through a course of instruction to fit them for the rate of petty officers, and finally, that such as are peculiarly deserving through proficiency and good conduct be made eligible for promotion to the position of warrant-officer. In this connection, I have the honor to recommend that no further appointments of warrant-officers be made until the opportunity is offered to fill them from these enlisted boys.

The corps of warrant-officers has fallen somewhat into disrepute from the large number among them who are either professionally or physically incompetent to fulfill their duties.

The above proposition would bring into that portion of the service a fresh element of young and thoroughly-trained American man-of-war's men, and would present an additional inducement for the enlistment of American-born boys. If, in addition to this introduction of young men identified with the Navy into these grades, recognized rank could be given them, as in the English navy, all, or the most meritorious, of the present incumbents to rank with, but next after, ensigns, but with no additional right to quarters, when retired after good and faithful service to rank with masters on the retired-list, and a division made into first and second classes by examination and record, in my opinion the efficiency of the Navy would be increased, and the position of warrant-officer be rendered much more desirable than at present.

OUTFITS.

I have again to ask the attention of the department to the absolute propriety of obtaining from Congress the appropriation of a sum of money sufficient to furnish every enlisted man and boy in the Navy with an outfit not exceeding fifty dollars. This outfit is particularly vital to the permanence of the training system. The boys who enlist for the service are generally of poor parentage, and it is quite obvious that, with their very small pay, they enter the Navy burdened with a debt which it takes months to pay. In many cases the clothes are worn out before they are paid for. It is equally just to the enlisted man of the

Navy that the outfit which is given to the soldier and marine should be given him.

The amount required would be about $125,000 per annum.

BANKING SYSTEM.

I again respectfully urge the passage by Congress of a bill to the following effect, viz:

Be it enacted by the Senate and House of Representatives of the United States of America in Congress assembled, That the provisions of the act approved May 15, 1872, entitled "An act to establish a system of deposits, to prevent desertion, and elevate the condition of the rank and file of the Army," so far as they relate to the payment of interest on deposits, be extended to include the payment of interest, at the rate of 4 per cent. per annum, to the appointed and enlisted petty officers, seamen, ordinary seamen, landsmen, boys, and marines in the naval service, on the amounts of their pay, respectively, that may be retained and borne to their credit on the books of the several pay-officers of the Navy, under such regulations and restrictions as the Secretary of the Navy may establish.

This law is in force in the Army with the most beneficial results, reducing desertion, and in every other way improving its tone and *morale.*

It seems just that the money of the sailor which lies in the Treasury of the United States, sometimes for three years, should receive a moderate rate of interest. The sum required to pay this interest would not amount to more than $25,000 per annum.

The bureau has made no contracts for supplies during the past fiscal year. Coal, hemp, and the more important supplies have been purchased from time to time in quantities as needed for the wants of the service, by advertisement, in the manner prescribed by law.

Other minor supplies required by the commandants, upon duly approved requisitions, for immediate use in fitting out vessels at the several naval stations, have been procured by the purchasing-agents, respectively.

The administration of this bureau during the past year has afforded me much gratification, from the fact that I have seen a gradual improvement in the rank and file of the Navy and an increased economy in outfits of ships. In the duty assigned me, I have been cheerfully sustained by the commandants and equipment-officers at the yards, the commanding officers of receiving and training ships, and by the civil employés of the bureau.

Very respectfully, your obedient servant,

R. W. SHUFELDT,
Chief of Bureau.

Estimates of appropriations required for the service of the fiscal year.

Detailed object of expenditure, and explanations.	Estimated amount which will be required for each object of expenditure.	Amount appropriated for the current fiscal year ending June 30, 1877.
SALARIES, BUREAU OF EQUIPMENT AND RECRUITING.		
Chief clerk, per Rev. Stat., page 69, section 416, and per act March 3, 1877, vol. 19, page 312, section 1	$1,800	
Additional for chief clerk, submitted	200	
One clerk of class 4, per Rev. Stat., page 26, section 167, and per act March 3, 1877, vol. 19, page 312, section 1	1,800	
One clerk of class 3, same acts	1,600	
Two clerks of class 2, same acts	2,800	

Estimates of appropriations required for the service of the fiscal year—Continued.

Detailed object of expenditure, and explanations.	Estimated amount which will be required for each object of expenditure.	Amount appropriated for the current fiscal year ending June 30, 1877.
SALARIES—Continued.		
Two clerks of class 1, same acts	$2,400	
One messenger, same acts	840	
One laborer, same acts	720	
	12,160	$11,960
NOTE.—The item "Two clerks of class 1" was included in the estimates for the current fiscal year, and was embraced in the appropriation bill as it finally passed the House of Representatives, but by a clerical error was omitted in enrolling the bill, although the amount of their pay was appropriated.		
CONTINGENT EXPENSES, BUREAU OF EQUIPMENT AND RECRUITING.		
Stationery, books, and miscellaneous items (appropriated) March 3, 1877, vol. 19, page 312, section 1	800	500
PAY OF THE NAVY.		
Pay of commissioned and warrant officers at sea, on shore, on special service, and those on the retired list and unemployed; and for mileage and transportation of officers traveling under orders; and for pay of the petty officers, seamen, ordinary seamen, landsmen, and boys, including men for the engineers' force and for the Coast-Survey service, 7,500 men, at the pay prescribed by law, as per Rev. Stats., page 264, sections 1556 to 1595, and act June 30, 1876, vol. 19, page 65, section 1	7,350,000	
Pay of 750 boys, recommended to be enlisted for training, at average pay of $120 per annum, submitted	90,000	
	7,440,000	6,600,000
EQUIPMENT OF VESSELS.		
Coal for steamers' and ships' use, including expenses of transportation, storage, and labor; hemp, wire, and other materials for the manufacture of rope; hides, cordage, canvas, leather; iron for the manufacture of cables, anchors, galleys, and chains; furniture, wood, bake-ovens, and cooking-stoves; boat-detaching apparatus, life-rafts and hose; heating-apparatus for receiving-ships; and for pay of labor in equipping vessels and manufacture of equipment articles in the several navy-yards, as per Rev. Stats., page 738, sections 3709 and 3747 (appropriated), vol. 19, page 387, section 1	1,250,000	870,000
CONTINGENT, BUREAU OF EQUIPMENT AND RECRUITING,		
Expenses of recruiting and fitting up receiving-ships; freight and transportation of stores, transportation of enlisted men, printing, advertising, telegraphing, books and models, stationery, express charges; internal alterations, fixtures, and appliances in equipment buildings at the several navy-yards; foreign postage, car-tickets, ferriage, ice, apprehension of deserters, assistance to vessels in distress, continuous-service certificates, and good-conduct badges for enlisted men, including purchase of school-books for training-ships, per Rev. Stats., page 726, section 3666, and (appropriated), vol. 19, page 388, section 1	75,000	65,000
CIVIL ESTABLISHMENT, BUREAU OF EQUIPMENT AND RECRUITING.		
Navy-yard at Kittery, one clerk	1,300	
Navy-yard at Boston, one superintendent rope-walk	1,800	
one clerk	1,400	
one clerk	1,300	
one writer	1,017	
Navy-yard at New York, one clerk	1,400	
one clerk	1,300	
Navy-yard at League Island, one clerk	1,300	
Navy-yard at Washington, one clerk	1,400	
one clerk	1,300	
one writer	1,017	
Navy-yard at Norfolk, one clerk	1,300	
Navy-yard at Pensacola, one writer	1,017	
Navy-yard at Mare Island, one clerk	1,400	
	18,251	.....

No. 6.—BUREAU OF ORDNANCE.

BUREAU OF ORDNANCE, NAVY DEPARTMENT,
Washington City, November 7, 1877.

SIR: I have the honor to submit the annual report of this bureau, with accompanying detailed estimates, for the fiscal year ending June 30, 1879.

These estimates have been revised and reduced to the smallest sum consistent with efficient current service, and with no provision for replacing our obsolete armament of smooth-bores with rifled cannon.

ESTIMATES.

1. Labor, tools, materials, and fuel used in fitting ships for service, and preservation of ordnance and ordnance-stores	$372,658
2. Repairs to buildings, magazines, wharves, gun-parks, tugs, lighters, and boats	89,177
3. Torpedo-service	171,551
Civil establishment at navy-yards	11,886
Total	645,271

A supplementary estimate is submitted for rifled cannon, their carriages, powder and projectiles for batteries of ships, and for armament of five double-turreted monitors now building.

The first item is somewhat greater than the amount estimated for last year, because the stock of materials on hand has been gradually expended and worn out in service, and wooden carriages need replacing with iron ones; but, while estimating as above for the current service, in order to keep pace with modern and well-established principles in the armament of our ships, this sum should be doubled.

REPAIRS.

The sum of $89,177, estimated for repairs, is most urgently required. The magazines, wharves, &c., are necessarily placed in exposed situations and require constant repair. The necessity of repairing the bulkhead surrounding the ordnance dock at New York has been for several years pressed on the attention of Congress, and as no appropriation has been made, slight defects have become very serious ones, and this valuable property is not only liable to great damage, but also the harbor of New York to great injury by washing the filling into the East River.

At the Norfolk station a small appropriation two years ago enabled me to place everything in good condition.

At all the other stations damage by storms and decay from ravages of worms and rot make the estimated repairs essential.

TORPEDOES.

With our very small force of ships and great extent of coast, the development of the torpedo-service becomes of paramount importance. As much of the equipment can be improvised, an attacking or blockading force can be much disquieted, if not destroyed, by very simple means, directed by brave and skillful officers.

Certain portions of the apparatus require time for their preparation, and cannot be readily obtained; careful test and practice in the use of the apparatus are necessary to give confidence to the officer who under-

takes the hazardous operation of attacking a large vessel or of defending his own from a pigmy foe.

It is probable that the limited use of torpedoes in the war now in progress is due to a want of confidence as well as of the skill obtained by practice.

The torpedo station at Newport, R. I., with its efficient commandant and instructors, turns out every year a well-instructed class of officers; but the force and means of instruction should be increased to such extent as to admit of rapid expansion if a necessity should occur.

Commanders Selfridge, Bunce, and Norton attended the course of instruction the past season; and it is to be expected that their example will be followed by others who are unwilling to remain unable to judge of the value of this efficient auxiliary for want of experimental knowledge.

CONVERSION OF SMOOTH-BORE CANNON TO RIFLE.

Ten 11-inch smooth-bores have been finished and twenty are in process of conversion to 8-inch muzzle-loading rifles by the approved method of lining with a wrought-iron tube. This conversion adds 25 per cent. to the power of the gun at the muzzle and doubles it at 1,000 yards.

The increased recoil required alterations in the carriage for its efficient control, which have been devised and answer well the purpose.

Ten 100-pounder muzzle-loading Parrott rifles are being converted to breech-loaders, for the armament of our narrow-beam sloops, on the slotted-screw principle, commonly known as the French closure, although an American device.

RIFLE-CANNON.

The sole object of a vessel of war is to make an exhibition of force when needed. Therefore her armament should be of the most approved type for a vessel of her class. In the era of wooden ships and smooth-bore cannon our vessels were a little superior to those of any other nation. During the past fifteen years a great advance has been made abroad, while we have remained nearly stationary. But the rifled cannon, having passed the experimental stage, is now adopted by all the maritime powers as the sole armament. Wherefore, if we are to maintain a Navy, we must adopt the rifle-cannon, or, in the event of collision, be forced to an unequal contest. There are several approved types of both breech and muzzle loaders, from which we can select the one most suitable without any great cost of experiment.

The sum of $762,000 is estimated as necessary for this purpose, and not less than a year would be required after an appropriation should be made before the first gun could be delivered.

EXPERIMENTS.

During the past fiscal year the appropriation has been too small to permit any experimental investigations. Such incidental trials of fuses and projectiles have been made as occurred in the test of current manufactures.

A small estimate is submitted, as without experiment meritorious inventions are not developed and plausible ones accepted.

A number of reports of value to the Navy are appended.

I am, with great respect, your obedient servant,

WILLLIAM N. JEFFERS,
Commodore, Chief of Bureau.

Hon. R. W. THOMPSON,
Secretary of the Navy.

Manufactures and preparations at the various navy-yards for the year ending June 30, 1877.

ARTICLES UNDER PROPORTION TO EACH GUN.

2 circular-brake carriages, 8-inch muzzle-loading rifle.
4 hydraulic-buffer carriages, 8-inch muzzle-loading rifle.
2 central-compressor carriages, 8-inch muzzle-loading rifle.
4 shell-bearers, 8-inch muzzle-loading rifle.
8 shifting-chocks, 8-inch muzzle-loading rifle.
20 canister, 8-inch muzzle-loading rifle.
14 pivot-bolts, 8-inch muzzle-loading rifle.
22 sets side-sights, 8-inch muzzle-loading rifle.
2 side-sight boxes, 8-inch muzzle-loading rifle.
3 trunnion-sights, 8-inch muzzle-loading rifle.
12 rear-sight covers, 8-inch muzzle-loading rifle.
12 front-sight covers, 8-inch muzzle-loading rifle.
7 sponges, bristle, 8-inch muzzle-loading rifle.
20 trunnion-eccentrics, 8-inch muzzle-loading rifle.
4 tompions and wads, 8-inch muzzle-loading rifle.
2 impression-takers, 8-inch muzzle-loading rifle.
20 canister-boxes, 8-inch muzzle-loading rifle.
6 cranks, 8-inch muzzle-loading rifle.
13 pivot shackle-plates, 8-inch muzzle-loading rifle.
15 rammers, 8-inch muzzle-loading rifle.
4 shell extractors, 8-inch muzzle-loading rifle.
11 shell-boxes, 8-inch muzzle-loading rifle.
24 passing-boxes, 8-inch muzzle-loading rifle.
3 breeching, 11-inch.
24 tackles, 11-inch.
4 sponges, woolen, 11-inch.
20 shell-boxes, 11-inch.
2 tompions and wads, 11-inch.
37 breeching, 11-inch.
186 tackles, 11-inch.
23 sponges, woolen, 11-inch.
10 rammers, 11-inch.
500 shell-boxes, 11-inch.
36 tompions and wads, 11-inch.
2 breeching, 60-pounder.
36 tackles, 60-pounder.
15 pivot-bolts, 60-pounder.
2 sponges, woolen, 60-pounder.
2 tompions and wads, 60-pounder.
5 directing-bars, 60-pounder.
4 sets carriage castings, 60-pounder.
24 breeching shackle-pieces, 60-pounder.
18 breeching-bolts, 60-pounder.
1 carriage, 100-pounder, Marsilly.
1 rack, 80-pounder, breech-loading.
1 breech-plug handle, 80-pounder breech-loading.
3 20-pounder breech-loading rifle.
2 carriages, 20-pounder breech-loading rifle.
2 directing-bars, 20-pounder breech-loading rifle.
9 elevating-screws, 20-pounder breech-loading rifle.
2 Broadwell rings, 20-pounder breech-loading rifle.
3 breech-sights, 20-pounder breech-loading rifle.
14 rammers, 20-pounder breech-loading rifle.
4 worms and ladles, 20-pounder breech-loading rifle.
12 tackles, 20-pounder breech-loading rifle.
5 breechings, 20-pounder breech-loading rifle.
2 sponges, woolen, 20-pounder breech-loading rifle.
1 sponge, bristle, 20-pounder breech-loading rifle.
45 shells, 20-pounder breech-loading rifle.
3 pivot-bolts, 20-pounder breech-loading rifle.
4 bronze carriages, 20-pounder rifle, muzzle-loading.
70 chocking-quoins.
20 muzzle-bags.
147 gun-gripes.
13 loading-tongs.

4 shell-box covers.
121 blocks, metal, double.
72 block-pins.
12 wash-deck chocks.
52 lock-straps.
6 lock-covers.
2 fuse-cutters.
84 friction-primer lanyards.
36 fuse-pickers.
14 linchpins.
1 set transporting axle and trucks.
19 handspikes, roller.
240 port-lanyards.
56 fire-bucket lanyards.
18 division and supply boxes.
1 extension piece.
10 division-tubs.
6 fire-tubs.
132 selvagees.
140 heavers for selvagees.
65 sponge-covers, canvas.
16 shell-whips.

HOWITZERS, EQUIPMENTS, ETC.

7 howitzers, steel, 3-inch breech-loading.
5 howitzers, bronze, 3-inch breech-loading.
1 Hotchkiss, 3-inch, breech-loading rifle.
3 boat-carriages, 3-inch, breech-loading howitzer.
8 field-carriages, 3-inch breech-loading howitzer.
32 field-carriage wheels.
4 sets wheel-shoes.
60 caisson-boxes; 6 elevating-screws.
99 passing-boxes
18 Broadwell rings.
2 cartridge-bag formers.
853 shells, 3-inch breech loading howitzer.
80 shrapnel, 3-inch breech-loading howitzer.
5 rammers and sponges, 3-inch breech-loading howitzer.
770 sabots.
624 Bormann fuses.
1 gun-cover for breech-loading howitzer.
24 train-ropes.
18 drag-ropes.
12 sponge-covers.
14 rings for sponge-buckets.
20 buckles for sponge-buckets.
10 tripods, Gatling gun.

SMALL-ARMS.

20 pairs arm-chest hinges.
18 pairs arm-chest hasps.
86 single-sticks.
21 arm-chests.
455 rear sight-guards.
8 boxes for spare parts.
250 cutlass-scabbards.
120 cutlass-scabbards frogs.
219 pistol-boxes.
46 battle-axe frogs.

MAGAZINE STORES.

282 cartridge-bag springs.
2,135 adapting-rings, Schenkl fuse.
500 cartridge-bags, 8-inch.
725 cartridge-bags, 3-inch breech-loading howitzer.
12 cartridge-bags, 20-pounder breech-loading rifle.
49,600 primers, cannon.
6,019 primers, cannon, quill-friction.
565 charges, 3-pound saluting.
128 charges, 3-inch breech-loading howitzer.

4 magazine-dresses.
10 pairs magazine-shoes.
3 magazine-screens.
230 Boxer fuses.
500 paper caps, Boxer fuse.
889 igniters.
400 Boxer fuse cases.
100 experimental fuse-cases.
1 powder-hopper.
3 powder-whips.
4 water-buckets.

TORPEDOES.

15 sets torpedoes, complete, prepared.
27 bridles, wire.
1,050 feet ash, Scotchman.
10 torpedo-tackles, 20 torpedo-guys.
3 sets torpedo-gear.
Repairs to deteriorated stores on hand.
Repairs to tools, &c.
Repairs to buildings and wharves.
Experimental work of all kinds.

MISCELLANEOUS ARTICLES.

9 sets deck-circles.
2,014 deck-circle screws.
5 clevis-bolts.
13 shifting chock-plates.
5 pivot-clamps.
6 pivot-clamp bolts.
16 pivot-sockets.
8 sets hose-couplings.
17 tallies.
2 pendulums.
20 powder-scuttles.
9 tin cans.
4 tin measures.
27 sponge-worms.
48 hooks and thimbles.
35 wrenches.
12 dummy friction-primers and lanyards.
Test-specimens.
Rings for pressing bands on shells.
Templates, assorted.
Tools, assorted.
1 hand-cart.
9 pressure-gauges.
887 pressure disks, copper.
3 pressure-disk housings.
5 pressure-gauge rammer and disk.
100 gas-checks for pressure-gauges.
1 sighting-instrument for 8-inch muzzle-loading rifle.
64 rammer and sponge hooks.
1 set tackles and gripes for steam dingey.
1 cover for engine for steam-dingey.
100 hooks and runners for primer-lanyards.
12 stud-pins for friction-primers.
1 testing-platform.
72 sets cutlass-brackets.
69 sets battle-axe brackets.
1 piston for buffer-carriage.
5 sets target-fittings.
140 port lanyard-hooks.
14 shell-whip hooks.
1 powder-chute.
1 screw-plate and tap-plate.
41 swabs.
11 handspike shoes.
10 snow-shovels.
1 gun-sling chain.
540 shell-plugs.

8 sweep-pieces.
Patterns, assorted.
Flasks and molding-boards, assorted.
1 chill-mold for 20-pounder-ball plug.
1 smoke-stack for boilers.
1 pressure-plug for Woodbridge fuse.
1 swage-plug for Woodbridge fuse.
1 set grate-bars for boilers.
12 shot-tongs.
6 dummy-shot, wood.
667 sabots.
Repairs to stores on hand.
Repairs to tools.
Repairs to buildings, wharves, shot-beds, gun-skids, &c.

Estimates of appropriations required for the service of the fiscal year ending June 30, 1879, by the Bureau of Ordnance, Navy Department.

Detailed objects of expenditure, and explanations.	Estimated amount which will be required for each detailed object of expenditure.	Amount appropriated for the current fiscal year ending June 30, 1878.
SALARIES.		
Chief clerk (Rev. Stats., p. 70, sec. 416; appropriated, act March 3, 1877, 19 Stats. at L., p. 312, sec. 1)	$1,800	.....
Draughtsman (Rev. Stats., p. 70, sec. 416; appropriated, act March 3, 1877, 19 Stats. at L., p. 312, sec. 1)	1,800	.....
One clerk of class three (Rev. Stats., p. 26, sec. 167; appropriated, act March 3, 1877, 19 Stats. at L., p. 312, sec. 1)	1,600	.....
Two clerks of class two (appropriated, act March 3, 1877, 19 Stats. at L., p. 312, sec. 1)	2,800	.....
One messenger (appropriated, act March 3, 1877, 19 Stats. at L., p. 312, sec. 1)	840	.....
One laborer (appropriated, act March 3, 1877, 19 Stats. at L., p. 312, sec. 1)	720	.....
	9,560	$9,560
CONTINGENT EXPENSES.		
Stationery, books, and miscellaneous items (appropriated March 3, 1877, 19 Stats. at L., p. 312, sec. 1)	800	400
ORDNANCE AND ORDNANCE STORES.		
Fuel, tools, and material of all kinds necessary in carrying on the current daily work of mechanical branches of the ordnance department of the several navy-yards, magazines, and stations (appropriated, 19 Stats. at L., p. 387, sec. 1)	126,776	.....
Labor at the several navy-yards, magazines, and stations in fitting ships for sea and in preserving ordnance material (appropriated March 3, 1877, 19 Stats. at L., p. 387, sec. 1)	223,457	.....
Miscellaneous items, to wit: Freight to foreign and home stations; advertising and auctioneers' fees; cartage and express-charges; repairs to fire-engines, gas and water pipes; gas and water tax at magazines; toll, ferriage, foreign postage, telegrams, &c. (appropriated, 19 Stats. at L., p. 387, sec. 1)	7,425	.....
NOTE.—The above estimates are based on the experience of several years, and the amounts are necessary for the efficiency of the service.		
Experiments in ordnance at the naval experimental battery, and navy-yard, Washington (appropriated, 17 Stats. at L., p. 549)	15,000	.....
	372,658	178,000
NOTE.—Without experimental trials no progress can be made; useful inventions are liable to rejection, and plausible innovations to be adopted. Furthermore, current work requires actual trial to detect defects.		
Necessary repairs to ordnance buildings, gun-parks, magazines, boats, lighters, wharves, machinery and appendages, including—		
Navy-yard, Portsmouth, N. H.:		
To ordnance buildings and grounds (appropriated, 19 Stats. at L., p. 387, sec. 1)	800	.....
To engines, machinery, &c. (appropriated, 19 Stats. at L., p. 387, sec. 1)	200	.....
Painting sheds, and repairs at magazine (appropriated, 19 Stats. at L., p. 387, sec. 1)	550	.....

Estimate of appropriations required for the service of the fiscal year, &c.—Continued.

Detailed objects of expenditure, and explanations.	Estimated amount which will be required for each detailed object of expenditure.	Amount appropriated for the current fiscal year ending June 30, 1878.
Navy-yard, Boston, Mass.:		
To buildings and grounds, engines, for new machinery, &c. (appropriated, 19 Stats. at L., p. 387, sec. 1)	$1,000	.....
To buildings, grounds, and railway at magazine (appropriated, 19 Stats. at L., p. 387, sec. 1)	1,200	.....
Navy-yard, Brooklyn, N. Y.:		
To the ordnance dock (appropriated, 19 Stat. at L., p. 387, sec 1)	45,748	.....
NOTE.—Attention is called to the absolute necessity for this expenditure.		
General repairs at magazine, Ellis Island (appropriated, 19 Stats. at L., p. 387, sec. 1)	1,785	.....
To machinery tug, powder-boat, and lighter (appropriated, 19 Stats. at L., p. 387, sec. 1)	2,624	.....
Naval magazine, Fort Mifflin, Philadelphia, Pa.:		
General repairs to buildings and grounds (appropriated, 19 Stats. at L., p. 387, sec. 1)	4,220	.....
Navy-yard, Washington, D. C.:		
To gun and shot parks, experimental and saluting batteries (appropriated, 19 Stats. at L., p. 387, sec. 1)	2,500	.....
To engines, machinery, and furnaces (appropriated, 19 Stats. at L., p. 387, sec. 1)	500	.....
General repairs to buildings and grounds at Branch and Bellevue Magazines, (appropriated, 19 Stats. at L., p. 387, sec. 1)	2,000	.....
Navy-yard, Norfolk, Va.:		
General repairs to buildings, grounds, boats, lighters, wharves, machinery, &c., at navy-yard, the gun-park at Saint Helena, and at Fort Norfolk, and, Craney Island magazine (appropriated, 19 Stats. at L., p. 387, sec. 1)	10,000	.....
Navy-yard, Mare Island, Cal.:		
General repairs to buildings and grounds, and to fences, wharf, &c., at magazine (appropriated)	7,550	.....
Naval experimental battery, Annapolis, Md.:		
General repairs to buildings, wharf, &c. (appropriated)	2,000	.....
	82,677	$10,000
NOTE.—For several years the appropriation for repairs has been so much reduced that the buildings and wharves, which are necessarily in exposed situations, are becoming quite dilapidated.		
Improvements, as follows, viz:		
Navy-yard, Mare Island, Cal.:		
Construction of gun-skids (submitted)	4,000	.....
Filling and tank-house near magazine, for filling powder and shell, and stowing empty tanks (submitted)	2,500	.....
	6,500	.....
CONTINGENT.		
Contingent expenses of the ordnance service of the Navy (appropriated, 19 Stats. at L., page 387, sec. 1)	1,000	1,000
TORPEDO CORPS.		
Labor (appropriated, 19 Stats. at L., p. 387, sec. 1)	36,000	.....
Material (appropriated, 19 Stats. at L., p. 387, sec. 1)	10,000	.....
Coal and gasoline (appropriated, 19 Stats. at L., p. 387, sec. 1)	6,000	.....
Freight, express charges, telegrams, &c. (appropriated, 19 Stats. at L., p. 387, sec. 1)	500	.....
General repairs (appropriated, 19 Stats. at L., p. 387, sec. 1)	5,000	.....
Sea-wall (appropriated, 19 Stats. at L., p. 387, sec. 1)	5,000	.....
Apparatus for instruction in electricity (appropriated, 19 Stats. at L., p. 387, sec. 1)	7,245	.....
Material for electrical department (appropriated 19 Stats. at L., p. 387, sec. 1)	2,050	.....
Apparatus, &c., for improvement of torpedoes (appropriated, 19 Stats. at L., p. 387, sec. 1)	2,393	.....
Apparatus, &c., to develop electricity to signaling, lighting, &c. (appropriated, 19 Stats. at L., p. 387, sec. 1)	26,613	.....
Chemical apparatus, &c., for instruction (appropriated, 19 Stats. at L., p. 387, sec. 1)	12,350	.....
Instruction, and general torpedo experiments, including fast launch (appropriated, 19 Stats. at L., p. 387, sec. 1)	44,300	.....
Experiments with submarine projectiles (appropriated, 19 Stats. at L., p. 387, sec. 1)	5,000	.....

Estimates of appropriations required for the service of the fiscal year, &c.—Continued.

Detailed objects of expenditure, and explanations.		Estimated amount which will be required for each detailed object of expenditure.	Amount appropriated for the current fiscal year ending June 30, 1878.
Expenses of the Board of Visitors (appropriated, 19 Stats. at L., p. 387, sec. 1)		$1,000	.....
Improvements, viz.: draughting-room, library, books, &c. (submitted)	$2,000		
Reservoir, $1,500; raising stable, $500; 2 small magazines, $250 (submitted)	2,250		
Blacksmith-shop, removing steam fire-engine, &c. (submitted)	1,500		
Magazine on Rose Island, $500; boat-shed on wharf, $100 (submitted)	600		
Boat-shed for all boats (submitted)	1,000		
Repairs to working laboratories of nitro-glycerine, &c. (submitted)	750		
		8,100	.....
		171,551	$38,500

NOTE.—The appropriations heretofore made have been simply sufficient for caring for government property, receiving and forwarding outfits of ships, &c. The above estimates are based upon progressive action, and to enable the Torpedo Corps to attain an advance over other countries, or at least to keep even with them.

CIVIL ESTABLISHMENT.

Navy-yard, Portsmouth, N. H.:		
One clerk, (appropriated, 19 Stats. at L., p. 386, sec. 1)	$1,300 00	.....
Navy-yard, Boston, Mass.:		
One clerk, (appropriated, 19 Stats. at L., p. 386, sec. 1)	1,400 00	.....
Navy-yard, Brooklyn, N. Y.:		
One clerk, (appropriated, 19 Stats. at L., p. 386, sec. 1)	1,400 00	.....
One writer, (appropriated, 19 Stats. at L., p. 386, sec. 1)	1,017 25	.....
Navy-yard, League Island, Pa.:		
One writer, (appropriated, 19 Stats. at L., p. 386, sec. 1)	1,017 25	.....
Navy-yard, Washington, D. C.:		
One clerk, (appropriated, 19 Stats. at L., p. 386, sec. 1)	1,400 00	.....
One writer, (appropriated, 19 Stats. at L., p. 386, sec. 1)	1,017 25	.....
Navy-yard, Norfolk, Va.:		
One clerk, (appropriated, 19 Stats. at L., p. 386, sec. 1)	1,300 00	.....
Navy-yard, Pensacola, Fla.:		
One writer, (appropriated, 19 Stats. at L., p. 386, sec. 1)	1,017 25	.....
Navy-yard, Mare Island, Cal.:		
One writer, (appropriated, 19 Stats. at L., p. 386, sec. 1)	1,017 25	.....
	11,886 25	.....

ORDNANCE AND AMMUNITION.

Supplementary.

For the batteries of ships, and as a reserve:		
20 smooth-bore XI-inch guns, converted to 8-inch rifles, at $2,450 (submitted)	49,000 00	.....
20 carriages for same, at $3,800 (submitted)	76,000 00	.....
2,000 projectiles, at $18 (submitted)	36,000 00	.....
700 barrels powder, at 30 cents per pound (submitted)	21,000 00	.....
For the armament of five double-turreted monitors, viz: Puritan, Monadnock, Miantonomoh, Amphitrite, and Terror:		
20 rifled cannon, at $15,000 (submitted)	300,000 00	.....
20 carriages, at $6,000 (submitted)	120,000 00	.....
2,000 projectiles, at $50 (submitted)	100,000 00	.....
2,000 barrels powder, at 30 cents per pound (submitted)	60,000 00	.....
	762,000 00	.....

Respectfully submitted.

WILLIAM N. JEFFERS,
Chief of Bureau.

OCTOBER 6, 1877.

WEST POINT FOUNDRY,
Cold Spring, N. Y., July 2, 1877.

SIR: In obedience to your instructions I have the honor to submit the following report of the conversion and proof-trial of a 100-pounder Parrott rifle converted into an 80-pounder breech-loader with a steel lining.

For proof-trial the gun was mounted on a wooden Marsilly carriage, and the shot were fired into a butt distant 150 feet from the muzzle of the gun. Tables of velocities, pressures, and useful effects are herewith transmitted. The velocities were taken with Benton's thread velocimeter, and the pressures partly with the Rodman pressure-gauge and partly with a spiral gauge screwed into the face of the nose-plate. The former gave in many cases most abnormal pressures, probably owing to the force of impact being caused by a blow instead of a pressure.

PROCESS OF CONVERSION.

The breech of the gun to be converted was first cut off at the base-ring, the old band removed, and the gun bored out from the rear to receive the steel tube. This boring extends to a point 12 inches in front of the axis of the trunnions. For a distance of 12.5 inches from the base-ring the diameter of the boring was 11.75 inches, and for the remaining portion 8.30 inches, the two portions being joined together by a rounded shoulder. A square-shouldered female thread was cut around the circumference of the boring at the breech end, corresponding to a male thread on the tube. The tube fitted to this casing was made from a solid ingot of cast-steel, 20 inches square, obtained from the Midvale Steel Works, Philadelphia. When finished its dimensions were as follows, viz:

	Inches.
Length of tube	58.2
Length of re-enforce portion	12.2
Thickness of re-enforce	1.85
Thickness of tube forward of re-enforce	1.415
Diameter of bore	6.4
Diameter of screw-chamber	7.5
Exterior diameter of tube at re-enforce	12.0
Exterior diameter of tube forward of re-enforce	9.43
Length of screw-thread	12.15
Depth of screw-thread	0.12
Pitch of screw-thread	2.08

In fitting the tube into its casing the latter was placed upright in a charcoal-furnace, with the top of the furnace filled in flush with the breech, leaving the bore clear for entering the tube. The heat in the furnace circulated around the outside of the casing, and was not allowed to enter the bore.

The tube was suspended from a crane immediately over the bore, and when the casing was sufficiently expanded (0.001 inch) it was lowered down and screwed firmly into place. The old band, which had been removed, was lengthened from 27 inches to 39 inches, bringing it forward to within 2.75 inches of the rimbases, and was shrunk on the gun with a shrinkage of 0.06 inch. The gun was then put on the rifling-machine and the original rifling remaining in the portion of the bore not enlarged was continued upon the steel tube. This rifling is on the following system, viz:

Twist increasing from zero to one turn in 19 feet at the muzzle.

	Inches.
Lands and grooves, equal (width)	1.2566
Depth of grooves	0.10
Length of rifling	124.0

The breech of this gun was closed with a screw-plug, and the Boardwell ring was first used as a gas-check. The breech-plug, and screw-box in which it works, being reciprocally slotted, the plug can be shoved in by hand until only a sixth of a turn is sufficient to give it a firm bearing against the Broadwell ring.

A revolving nose-plate on the forward face of the plug facilitates unlocking after firing, and prevents any grinding across the face of the Broadwell ring. The vent is horizontal, passing through the center of the plug and nose-plate. The gun when finished weighed 10,150 pounds, and had no preponderance.

PROOF-TRIAL.

The gun has been fired 277 rounds with charges of 10 and 12 pounds of rifle-powder and a shot weighing 80 pounds.

The expanding ring on the old Parrott shot was found too weak to withstand the quick-burning powder used in this gun, and a stronger one of different shape was substituted in its place.

A change of form also was made in the base of the projectile so as to prevent any chipping off of the iron in front of the band; and with these alterations a very satisfactory result has been obtained.

SERVICE OF THE GUN.

In the service of the gun it was found that four men were sufficient for cleaning and loading, and with a mechanical carriage the gun might easily be worked by that number. At the commencement of the proof-trial (December 19, 1876) water was freely used as a lubricator in cleaning the breech-plug and screw-box. As the weather grew colder much inconvenience was experienced from the water freezing and forming a coating of ice on the threads of the screw-box. The use of oil was attempted as a lubricator, but that also congealed and left a gummy deposit, causing the plug to stick after firing. Attempts at lubrication were then abandoned, and the threads were simply wiped dry with a rag or swab, and this was found to answer every purpose. At this time also sponging was abandoned, as it was found that the passage of the sponge through the screw-box left an amount of dirt which it was difficult to remove, and prevented the threads from being kept clean and bright. Fifty rounds, as an experiment, were fired without sponging, and as no inconvenience resulted and the service of the gun was much simplified this method of service was continued. The expanding ring on the shot seemed to sweep out the grooves each round and prevented any deposit from accumulating.

GAS CHECKS.

The Broadwell ring, with which 247 rounds were fired, did its duty thoroughly, and required no particular care or attention. The face of the ring was wiped off after each round, and the bearing surface on the nose-plate cleaned with alcohol.

Thirty rounds were fired with a new cup gas-check. This gas-check is somewhat similar in form to the Broadwell ring, but is less in diameter, and presents a smaller surface for the action of the powder-gas, and consequently brings a less strain on the breech-plug and its supports.

BREECH MECHANISM.

The breech-closing apparatus gave during the proof-trial the most satisfactory results, and can be relied upon for strength and efficiency.

If the threads are kept dry and carefully wiped after each round no difficulty in locking or unlocking will be experienced. Where sponging is abandoned or used only at intervals, and with no escape of gas past the Broadwell ring, very little dirt of any kind can reach the threads of the plug or screw-box, and they can easily be kept clean by wiping after each round.

VENT-CHECKS.

The cartridge being ignited by a central vent through the plug and nose-plate, several kinds of interior vent-checks were experimented with, but none of them gave very satisfactory results. The bureau finally directed that a copper bushing with a reduced vent, 0.07 inches in diameter, be set into the face of the nose-plate. This was found to answer very well, and allowed but little escape of gas, at the same time requiring no care to keep it in order.

SYSTEM.

Whatever the ultimate endurance of this system may prove to be, it has already developed great strength, and has proved itself to possess two very essential qualities in any breech-loading system, viz:

1. Longitudinal strength.
2. Safety of breech mechanism.

For want of the latter quality the British Government abandoned a system of breech-loading ordnance into which they had largely entered and returned to muzzle-loaders. Next to the vitality of the tube, it certainly is a most essential point, and every reliance can be placed on the screw-breech.

The following measurements of the steel tube were taken after the proof-firing:

	Below rifling.	Between lands.
	Inches.	*Inches.*
Diameter of finished tube	6.60	6.40
Diameter after 247 rounds	6.609	6.409

In addition to its strength and safety of breech mechanism, the ease with which it can be worked by a few men, its ability to stand rough usage in all kinds of weather, and the comparative cheapness of construction, are strong points in favor of this method of conversion. By extending the length of the screw-thread and re-enforce portion of the tube, as has been done in later designs, a much greater support to the tube has been obtained and its strength increased.

Very respectfully, your obedient servant,

F. J. HIGGINSON,
Commander, U. S. N., Inspector of Ordnance.

Commodore W. N. JEFFERS, U. S. N.,
Chief of Bureau of Ordnance, Navy Department, Washington, D. C.

DIRECTIONS FOR THE USE OF THE INTERNAL SPIRAL PRESSURE-GAUGE.

BY LIEUT. B. H. BUCKINGHAM.

The set is composed of two gauges, one of quarter-inch area, and the other of half-inch area; two formers, to fit in the head of the pistons, to be used in putting on the leather packing-rings; two punches, for cutting the holes in the packing-rings, and a wrench.

The disks are of pure rolled copper, carefully gauged to size and annealed.

The curve is made to correspond with the disks sent. It is not absolutely safe to use this curve with disks made at another time, but a new curve should be made for each set of disks.

The sets are lettered and the gauges in the set are numbered, as it is necessary to keep a record of each piston. The housings are lettered and numbered to correspond. The half-inch-area piston should be used for the lower pressures up to 20,000 pounds per square inch, though it will record to 40,000 pounds; the quarter-inch-area piston for the higher pressures from 20,000 pounds and upward, and it will record to 100,000 pounds.

To use the gauge.

With the wrench screw out the base-tap, and then push out the piston from the top. It will not go out the wrong way, owing to the shoulder on the small one and in the housing of the large one. These shoulders are useful in preventing the pistons from flying out from the jar of recoil or the pressure of the gas should it leak behind it, or the suction of the vacua in the waves of pressure, as is sometimes said to be the cause of this action. The piston will occasionally come out hard, owing to the residuum, but when cleaned it should go back with little force, not above four or five pounds. When the gauge is apart, thoroughly clean it, both inside and out, with alcohol or oil. This is very important. When clean, oil well the piston, the packing-ring, and the cylinder. Neat's-foot oil is the best, tallow next.

Push the piston home and center a clean disk over the spiral. Screw the base-tap home, the slopes of which will center the disk. Turn the gauge over and push the piston firmly down upon the disk, so that the error of its momentum will be minimum. Then fill up the space on top of the piston with tallow or oil it well. Tallow or oil well the outside thread, and screw it home to its place with the face of the piston opposite the pressure-chamber. Grease should not be spared, as it, in itself, is an excellent packing. The air-hole in the base-tap should communicate, if possible, with the air, so that the pressure of any gas leaked by the packing will be lessened by expansion. After the pressure is taken, take the gauge apart immediately and examine the piston to see if streaks of residuum indicate that the gas has passed the packing, also the disk to see if it is discolored or blued by gas, thus indicating leak. Should a leak be noted, the fault will lay with the packing most generally. Examine this carefully with a glass; if there be flaws, see if they extend across the face of the ring, or see if the surface of the ring is below the line of the piston. In either case the ring must be changed. To do this, cut out the old one, taking care not to scratch the surface of the piston or the score.

To prepare a new ring.

This is a most important element of the successful working of the gauge, for if the ring is in good order and the gauge clean, reliable results may be counted on.

Select a good piece of fine sole-leather, of firm fine grain, which will stretch well without cracking, but of an elasticity which will prevent a permanent stretch when dry. Cut a piece not less than three inches in diameter, soak it well in warm water and work it soft and pliable. Then with a punch cut a hole in the center. Ship the former on the piston and set the leather firm and square on it by hand. Invert the piston over a hole in a block of wood, with the head of the former entered into the hole, which should be a little larger than the exterior of the piston. Strike the base of the piston a sharp blow with a wooden mallet, thus forcing the packing quickly into its groove. Slow forcing is apt to stretch permanently the leather. See it well worked into the groove.

Take it to a vise and work around the circumference by squeezing the leather between the jaws of the vise. Take about half-inch nips the first round, and then spirally work in until the vise touches the piston. Let the leather then stand for several hours to slowly and perfectly dry. Then with a very sharp leather knife cut the leather off clean and smooth, even with the surface of the piston.

If carefully used, *i. e.*, well cleaned and greased between each fire, they will stand many fires, but with bad care they will soon wear out.

To read the disk.

Commence at the heavy radial cut and count the ridges of the thread, then to the right the radial divisions to the end of the impression. The ridges will give the number of turns and the divisions the tenths.

SPIRAL PRESSURE GAUGE.

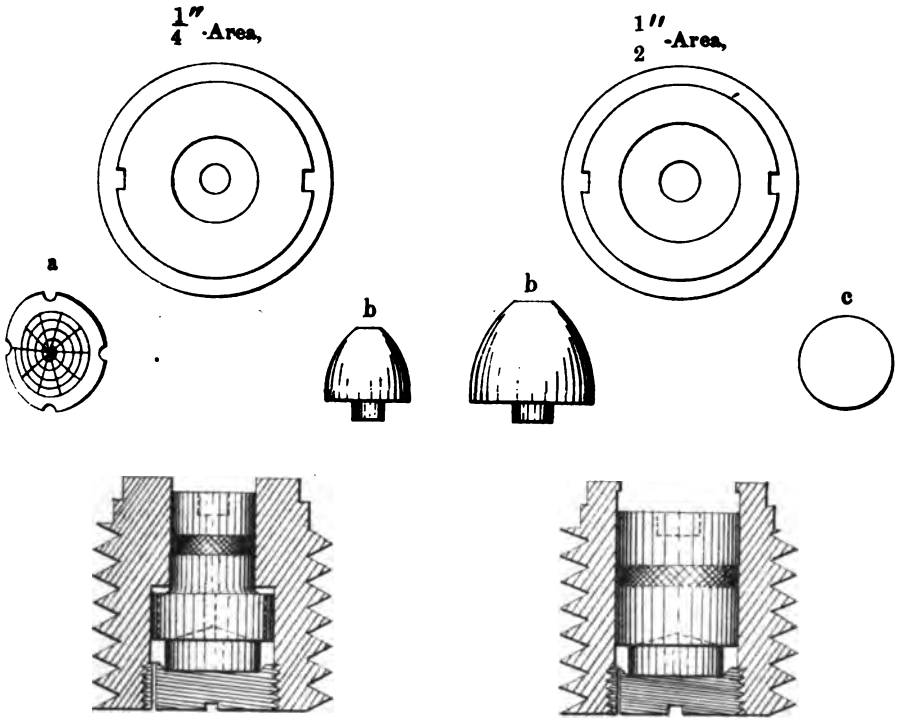

a, FACE OF PISTON; *b b*, FORMERS; *c*, PRESSURE DISC.

THE HELIOTYPE PRINTING CO 220 DEVONSHIRE ST BOSTON

NTERNAL SPIRAL PRESSURE GAUGE.

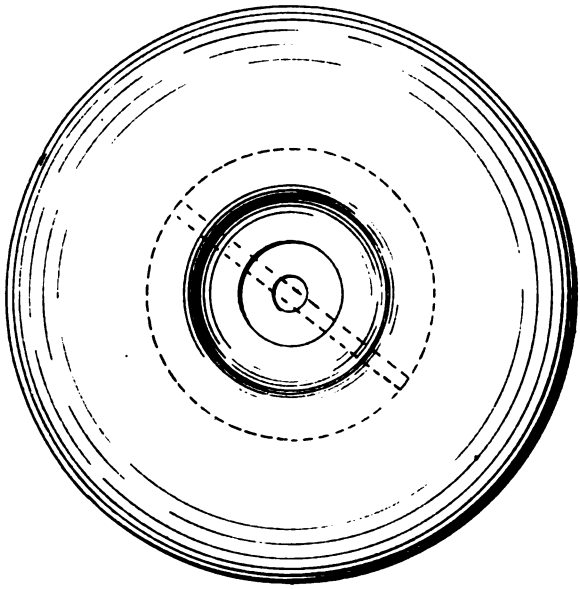

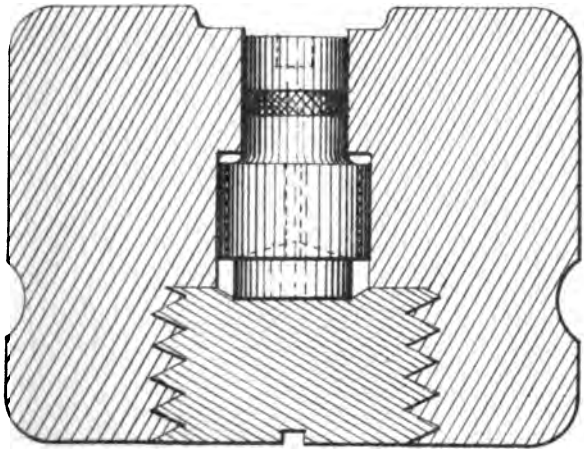

THE HEALY-TYPE & ENGRAVING CO. 290 DEVONSHIRE ST. BOSTON

Table of velocities, pressures, and of useful effect of the VIII-inch muzzle-loading rifle, obtained during proof-trial, West Point Foundery, Cold Spring, N. Y., April, 1877.

Powder.		Cartridge.						Initial velocity.		Pressure.	
Kind.	Weight.	Length.	Diameter.	Volume of powder-chamber.	Density of the charge. $\frac{B}{C}$	Weight of the projectile.	Number of fires from which mean was taken.	Mean. v.	Difference.	Mean. D.	Difference.
	Lbs.	*Inch.*	*Inch.*	*Cubic inch.*		*Pounds.*		*Foot seconds.*	*Foot-seconds.*	*Pounds per square inch.*	*Pounds per square inch.*
Hexagonal	20	15	7.15	702.15	.85776	180	25	1,141	62.9	18,592	1,424
Hexagonal	35	24	7.15	1,154.53	.83468	180	35	1,475	36.2	25,855	2,878
Cubical	20	15	7.15	702.15	.85776	180	20	1,121	55.7	26,915	3,000

Powder.		Cartridge,		Energy.						Momentum of gun.	Initial velocity of recoil of gun and carriage.
Kind.	Weight.	Length.	Diameter.	Muzzle. $E=\frac{wv^2}{2g\times 2240}$	Per pound of gun. $\frac{E}{P}$	Per pound of powder. $\frac{E}{p}$	Per atmosphere of pressure. $\frac{E\times 14.69}{D}$	Per inch of shot's circumference. $\frac{E}{wd}$	Utilized percentage of charge. Realized energy. Cal. maximum.*	$\left(m+\frac{\mu}{2}\right)v$	$\frac{\left(m+\frac{\mu}{2}\right)v}{m'+m''}$
	Lbs.	*Inch.*	*Inch.*	*Foot-tons.*	*Foot-tons.*	*Foot-tons.*	*Foot tons.*	*Foot-tons.*	*Per cent.*	*Foot-pounds.*	*Foot-seconds.*
Hexagonal	20	15	7.15	1,626	.094	81.3	1.29	65.13	73	6,958	10.3
Hexagonal	35	24	7.15	2,718	.158	77.7	1.54	108.84	83	9,350	13.8
Cubical	20	15	7.15	1,569	.091	78.5	0.86	62.87	70	6,836	10.1

* See Treatise on Construction of Ordnance, London, 1877, page 352 *et seq.*

Projectile, Parrott or Butler shell; length, 20 inches; diameter, 7.95 inches; area of cross-section, 49.64 square inches; length of bore in calibers, 16; volume of bore, 6,392.63 cubic inches; volume of 20 pounds of hexagonal powder, 602.27 cubic inches, space to the pound, 30.113 cubic inches, total volumes in bore (grav. density=1), 11.539 cubic inches; volume of 35 pounds hexagonal powder, 963.64 cubic inches, space to the pound, 27.53 cubic inches, total volumes in bore (grav. density=1), 6.5937; volume of 20 pounds cubical powder, 602.27 cubic inches, space to the pound, 30.113, total volumes in bore (grav. density=1), 11.539; tension of atmosphere, 14.69 pounds; weight of gun, 17,230 pounds; weight of top-carriage, 3,810 pounds.

B = volume of powder in charge; C = volume of the section of bore occupied by the charge; D = pressure per square inch in bore; E = muzzle-energy of the projectile; m = mass of projectile; μ = mass of charge; m' = mass of gun; m'' = mass of top-carriage; P = weight of gun; p = weight of charge; d = diameter of projectile; v = initial velocity of projectile; W = weight of projectile.

Table of velocities, pressures, and useful effects of the 80-pounder breech-loading rifle, West Point Foundery, Cold Spring, N. Y., April, 1877.

Powder.		Cartridge.		Volume of powder-chamber.	Density of the charge. $\frac{B}{C}$	Weight of the projectile.	Number of fires from which mean was taken.	Initial velocity.		Pressure.	
Kind.	Weight.	Length.	Diameter.					Mean. v.	Difference.	Mean. D.	Difference.
	Lbs.	*Inches.*	*Inches.*	*Cubic inches.*		*Pounds.*		*Foot-seconds.*	*Foot-seconds.*	*Pounds per square inch.*	*Pounds per square inch.*
Scaghticoke rifle	10	11.5	5.5	382.41	0.7145	80	50	1,252.8	45	15,700	900

Powder.		Cartridge.		Energy.						Momentum of gun.	Initial velocity of recoil of gun and carriage.
Kind.	Weight.	Length.	Diameter.	Muzzle. $E=\frac{wv^2}{2g\times 2240}$	Per pound of gun. $\frac{E}{P}$	Per pound of powder. $\frac{E}{p}$	Per atmosphere of pressure. $\frac{E\times 14.69}{D}$	Per inch of shot's circumference. $\frac{E}{\pi d}$	Utilized per cent. of charge. Realized energy. / Cal. maximum.*	$\left(m+\frac{\mu}{2}\right)v$	$\frac{\left(m+\frac{\mu}{2}\right)v}{m'+m''}$
	Lbs.	*Inches.*	*Inches.*	*Foot-tons.*	*Foot-tons.*	*Foot-tons.*	*Foot tons.*	*Foot-tons.*	*Per cent.*	*Foot-pounds.*	*Foot-seconds.*
Scaghticoke rifle	10	11.5	5.5	871.22	.086	87.12	.815	43.67	73	3,310	9.14

* See Treatise on Construction of Ordnance, London, 1877, page 352 *et seq.*

Projectile, Parrott; length of bore, in calibers, 19.7; diameter of bore, 6.4 inches; volume of bore, 4,070.5 cubic inches; volume of 10 pounds rifle-powder, 273.23 cubic inches; space to the pound, 27.3 cubic inches; total volumes in bore (grav. density = 1), 14.749; tension of atmosphere, 14.69 pounds; weight of gun, 10,150 pounds; weight of carriage, 1,500 pounds.

B = volume of powder in charge; C = volume of section of bore occupied by the charge; D = pressure per square inch in bore; E = muzzle energy of projectile; m = mass of projectile; μ = mass of charge; m' = mass of gun; m'' = mass of carriage; P = weight of gun; p = weight of charge; d = diameter of projectile; v = initial velocity of projectile; w = weight of projectile.

SECTION OF LOWELL BATTERY GUN. Fig 1.

TRAVERSING GEAR.

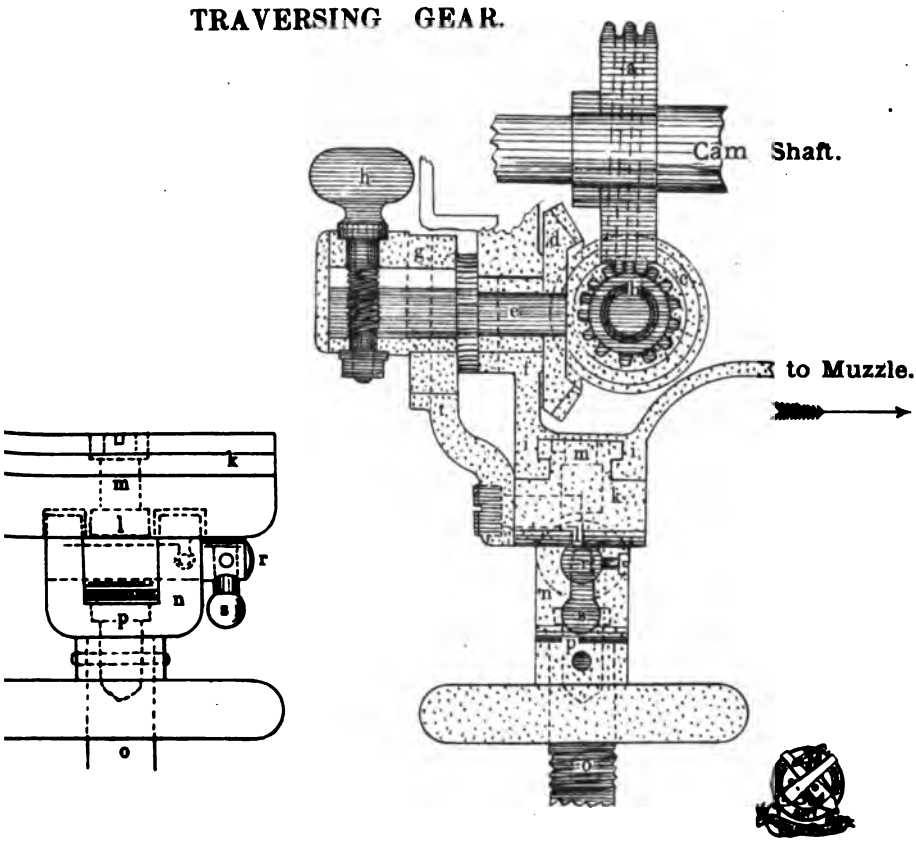

THE HELIOTYPE PRINTING CO. 211 TREMONT STREET BOSTON

Comparison of pressures taken with a Rodman cutter and a spiral impressor, West Point Foundery, Cold Spring, N. Y., July, 1877.

Powder.		Cutter or impressor.	Weight of projectile.	Number of rounds from which mean was taken.	Mean pressure.		Remarks.
Kind.	Weight.				Pounds.	Atmospheres.	
	Lbs.		*Lbs.*				
Hexagonal...	20	Rodman	180	11	22,971	1,562.6	In getting the mean, results which differed by more than twice the mean difference were rejected.
Hexagonal...	20	Spiral	180	11	17,736	1,206.5	
Hexagonal...	35	Rodman	180	10	33,030	2,247.0	
Hexagonal...	35	Spiral.....	180	10	27,674	1,882.5	

Pressure of atmosphere, 14.7 pounds.
Average difference between Rodman cutter and spiral impressor, 5,285.5 pounds, or 359.5 atmospheres.
Respectfully submitted.

F. J. HIGGINSON,
Commander, U. S. N., Inspector of Ordnance.

CHICOPEE, MASS., *June* 28, 1877.

SIR: In obedience to the order of the department of May 31, I came to this place on June 4, and inspected the five Lowell battery-guns being here constructed for the Navy.

The guns, successively, were subjected to a firing-test, the whole firing being prolonged through several days.

Since the Lowell battery-gun was last reported on by a board of naval officers, it has been changed in several particulars. The traversing-mechanism has been entirely changed. At present the lateral motion is effected as follows: On the cam-shaft, within the "box," or mechanism-casing, a worm, *a* (Fig. 1), is fitted, which engages a worm-wheel, *b*, of 14 teeth, mounted on a transverse horizontal axis, which has bearings for it cast within and at the sides of the "box." This shaft, near its left end, carries a bevel-wheel, *c*, of 22 teeth, which in turn engages a larger bevel-wheel, *d*, of 37 teeth, placed in the transverse vertical plane on a shaft, *e*, which is parallel to the axis of the piece. The shaft passes out to the rear through the breech-plate, *f*, where it has a long bearing, and has near its outer end an eccentric collar, *g*, with a set-screw, *h*, by which the throw of the eccentric can be adjusted, at pleasure, to give the gun a lateral play, varying from 0° to 1° 24′ on each side of the axial line of the piece.

In the rear lower side of the box a lug, *i i*, is cast, its rear face being flush with the breech-plate, while its bottom face is finished up and has a groove cut transversely entirely across it. The lug rests upon a traverse-block, *k*, a finished bronze casting, from whose upper face a T-shaped tongue projects, fitting into and playing in the groove of the lug. To the traverse-block another lug, *l*, of steel is fitted, held to the block by a through-screw, *m*, and having a slight play. A yoke, *n*, is keyed on the top of the elevating-apparatus, *o*, the key, *p*, turning in the yoke, while its lower end is held rigidly in the elevator. This yoke, *n*, is in turn keyed to the steel lug *l* on the bottom of the traverse-block, by means of a locking-pin, *r*, with a lever-head, the end of the lever, *s*, being weighted to make it hang vertical and keep the pin locked. When it is desired to shift the gun from one mounting to another this locking-pin is pulled out, freeing the traverse-block from the elevating-apparatus. From the rear face of the traverse-block, and firmly screwed to it,

a bronze arm, *t*, projects aft and upward, its upper end being forked, the fork embracing the eccentric collar.

When the crank is turned it revolves the cam-shaft, by suitable gearing, three times for every full turn of the crank. The worm on the cam-shaft drives the bevel-wheels, the larger of which carries with it in its revolutions the eccentric collar; and when the eccentric is set, by means of its adjusting-screw, with any throw, it, acting upon the forked arm connected with the traverse-block, causes the breech of the gun to move slowly backward and forward, from right to left, in the horizontal plane, about twelve shots being delivered while the muzzle is moving once from right to left.

The composition rails, supporting the barrels, which were cast in one with the "box," have been superseded by steel rails, similar to those on the Gatling gun, which are secured to the sides of the "box"; and the manner of supporting the barrels, as well as the method for revolving them, has also been changed.

The four barrels belonging to this gun are grouped around an imaginary central axis, and held in place by insertion into circular brass disks near the forward and at the after ends. These disks revolve in rings which fit smoothly to their circumferences, each disk and its ring being matched together. The disk and ring for the forward ends of the barrels are joined together somewhat as shown here, a longitudinal space being left between the disk and the ring, to accommodate any throwing forward of the disk by the expansion of the barrels in firing. The individual barrels also fit loosely in this disk. The ring hangs on horizontal trunnions, which, passing through holes in the rails near their forward ends, enter sockets in the rings.

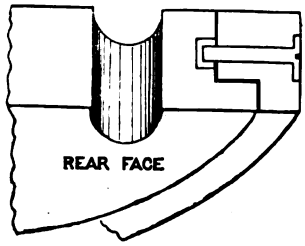

The ring and disk for the rear ends of the barrels are fitted as here shown, the disk having a groove cut around it to take the ends of screws placed at intervals through the ring, their inner ends traveling in the groove. The barrels are screwed into this disk, projecting slightly beyond its rear face, where their edges are rounded off. The ring of this disk fits upon a bearing-seat in the rails, just forward of the carrier-rolls, whose cover shuts down on two studs projecting from the rear of the ring, thus locking the rear end of the group of barrels in place. To throw up the barrels it is only necessary to lift the cover, and raise them out of their seat by the lever-handle hereafter to be described. (See No. 1, Fig. 2.)

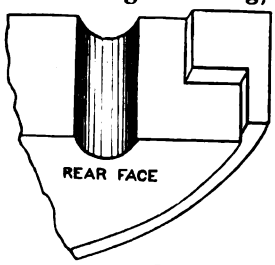

The group of barrels, supported in these two places, can be revolved around its imaginary central axis, the latter being placed at such a height relatively to the loading mechanism that the revolution of the barrels brings any desired one to the loading-position.

At present, the revolution of the barrels is accomplished by a short lever, No. 1 (fig. 2), the heel engaged at the center of the after barrel-disk and the handle projecting conveniently above the gun, the shank coming between the rear of the disk and the cover for the carrier-rolls. This lever has a spring-paul, 3, passing down through the center of its handle, the lower end of the paul bearing by spring-pressure upon the face of the slot, 4, cut in the circumference of the disk, while the upper

SECTION OF LOWELL BAT

METHOD OF REVOLVING THE B

(View From the Fron

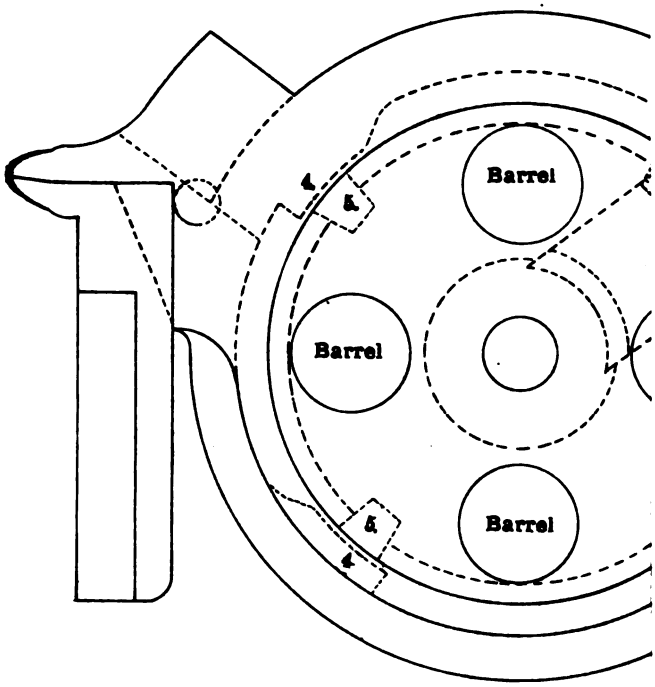

THE HELIOTYPE PRINTING CO. 337 DEVONSHIR

a bronze arm, *t*, projects aft and upward, its upper end being forked, the fork embracing the eccentric collar.

When the crank is turned it revolves the cam-shaft, by suitable gearing, three times for every full turn of the crank. The worm on the cam-shaft drives the bevel-wheels, the larger of which carries with it in its revolutions the eccentric collar; and when the eccentric is set, by means of its adjusting-screw, with any throw, it, acting upon the forked arm connected with the traverse-block, causes the breech of the gun to move slowly backward and forward, from right to left, in the horizontal plane, about twelve shots being delivered while the muzzle is moving once from right to left.

The composition rails, supporting the barrels, which were cast in one with the "box," have been superseded by steel rails, similar to those on the Gatling gun, which are secured to the sides of the "box"; and the manner of supporting the barrels, as well as the method for revolving them, has also been changed.

The four barrels belonging to this gun are grouped around an imaginary central axis, and held in place by insertion into circular brass disks near the forward and at the after ends. These disks revolve in rings which fit smoothly to their circumferences, each disk and its ring being matched together. The disk and ring for the forward ends of the barrels are joined together somewhat as shown here, a longitudinal space being left between the disk and the ring, to accommodate any throwing forward of the disk by the expansion of the barrels in firing. The individual barrels also fit loosely in this disk. The ring hangs on horizontal trunnions, which, passing through holes in the rails near their forward ends, enter sockets in the rings.

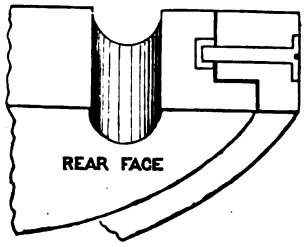

The ring and disk for the rear ends of the barrels are fitted as here shown, the disk having a groove cut around it to take the ends of screws placed at intervals through the ring, their inner ends traveling in the groove. The barrels are screwed into this disk, projecting slightly beyond its rear face, where their edges are rounded off. The ring of this disk fits upon a bearing-seat in the rails, just forward of the carrier-rolls, whose cover shuts down on two studs projecting from the rear of the ring, thus locking the rear end of the group of barrels in place. To throw up the barrels it is only necessary to lift the cover, and raise them out of their seat by the lever-handle hereafter to be described. (See No. 1, Fig. 2.)

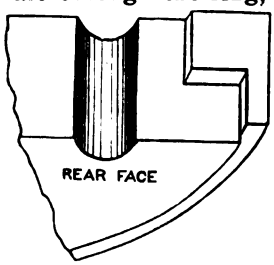

The group of barrels, supported in these two places, can be revolved around its imaginary central axis, the latter being placed at such a height relatively to the loading mechanism that the revolution of the barrels brings any desired one to the loading-position.

At present, the revolution of the barrels is accomplished by a short lever, No. 1 (fig. 2), the heel engaged at the center of the after barrel-disk and the handle projecting conveniently above the gun, the shank coming between the rear of the disk and the cover for the carrier-rolls. This lever has a spring-paul, 3, passing down through the center of its handle, the lower end of the paul bearing by spring-pressure upon the face of the slot, 4, cut in the circumference of the disk, while the upper

SECTION OF LOWELL BAT

METHOD OF REVOLVING THE B

(View From the Fron

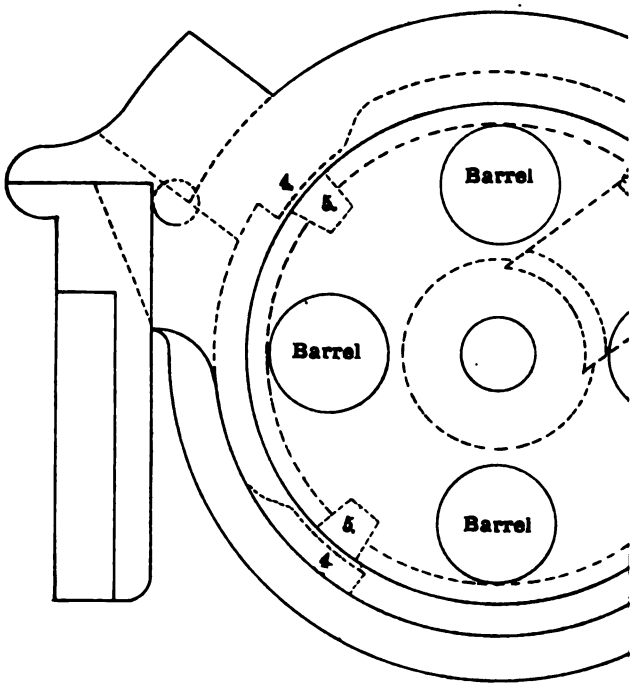

THE HELIOTYPE PRINTING CO. DEVONSHIR

end of the paul passes out through the lever-handle, so that should the paul be left up through any defect in its spring, it may be forced down by hand. No. 2 is a spring-catch extending down through the ring and fitting into holes or sockets, 5, in the disk. These holes are properly spaced for clamping the barrels in front of the lock.

When it is desired to revolve up a new barrel for firing, the lever 1 is pulled across the group of barrels, to the left in the figure, but to the right when facing the muzzle of the gun. As it moves across the shoe 7, which is fast to the lever, in passing the spring-catch, 2, raises it by passing under its beveled head, 6, and frees it from the hole 5, in the disk. While the catch is thus raised the paul 3 takes against the side of the slot 4, and the progressive motion of the lever to the left revolves the group of barrels. In the mean time the shoe 7 has passed beyond the head 6 of the catch, and has permitted the catch 2, by the pressure of its spring, to bear upon the outer face of the disk. When the lever 1 has traversed the space between the rails, it has so far revolved the barrels that a new hole, 5, is under the catch 2, and the catch is forced by its spring into it, at which point the new barrel is in the firing position. The lever is then pushed back to its original position, the paul 3 riding up the incline of the slot 4, without disturbing the barrels. The shoe 7, in going back, rides over the head of the catch 2, and forces it into its socket, if not already there.

Some slight changes have been made in the method of movin lock by the cam. Heretofore the cam had a flange on it which worked between two studs on the lock, by which the lock was alternately moved backward and forward. Now the same motion is obtained by having one stud on the lock, which fits into a groove in the flange on the cam; also the cocking-flange, which was formerly a part of the cam, is now made separate. It is shaped somewhat as given in the illustration.

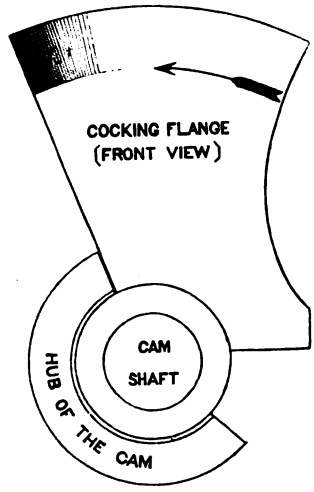

The front hub of the cam is partly cut out; the cocking-flange, of steel, which has the same radius as the cam, goes into this cut, whichit nearly fills, and is secured to the cam-shaft, while the cam plays loosely upon it. Now when the cam-shaft is revolved it carries with it the cocking-flange, whose side, taking against the face of the cut in the hub, causes the cam also to revolve. As the hub-cut is larger than the cocking-flange where the flange passes through it, there is a slight loss of motion in the cam when the crank is reversed. This is given, so that if the shaft is reversed in its motion immediately after the gun is fired, the cocking-flange may be thrown back before the cam begins to reverse, and thus insures the flange getting in, abaft the cocking-stud, before the lock is drawn at all to the rear. The part marked *x* is cut to conform to the groove in the cam-flange. The revolution in firing is in the direction of the arrow. The form of the firing-pin has been slightly altered in shape, to guard against destructive vibrations.

The "feeder" for use with cartridges packed in paper boxes, and the feed-port, with the arrangement for closing it, are the same as when the gun was last reported on. During the trial a new "feeder," of the same general shape as the old one, but intended to be used with cartridges

carried in tin holders or boxes, was presented for trial by the exhibitors of the gun; but, as will be seen in the notes in the firing-record, it was so unsatisfactory in its performances, from causes there set forth,* that it was withdrawn; and neither the feeder nor the cartridges in tin holders were again presented for trial.

The sights for the Lowell battery-gun are placed at the side, the front sight being secured to the outer face of the right barrel rail near its forward end. Its upper edge is as high as the axis of the firing-barrel. The target sight is contained in a case, which is screwed to the rear end of the right rail abreast the breech-plate. This sight has one movement only, that in the vertical plane, when the gun is level, and is clamped in position by a spring. The vertical plane through the sights is said to be parallel to the vertical plane through the axis of the firing-barrel.

So far as I could ascertain, the tripod mounting for this pattern of gun is substantially the same as that exhibited at the naval experimental battery in October last. The inventors have, however, designed a field-carriage, upon which the guns were mounted during a part of the firing. The carriage, and also the tripod mounting, are shown in the accompanying photographs furnished to me by the exhibitors of the gun. As will be seen in both mountings, the gun rests on a heavy saddle or trunnion seat, which, in turn, rests upon the usual "tail" piece. In the field-carriage this "tail piece" fits down on a pivot cast on the top of the sphere, which, with a shell described below, forms a ball-and-socket joint. The ball, in this case, has a feather running around its under side, opposite the pivot, and is embraced by a hemispherical cast iron shell, cast in two parts, with flanges for uniting them, in which a score is left for the feather. The ball and interior ofthe shell are finished up smooth and the parts are united. The shell is then keyed by another flange to the under side of the table of the carriage, through which it partly projects. On the outside face of the feather teeth are cut, into which the thread of a worm-screw plays. The worm-screw, with a disk head, is seen on the right in the picture. This screw gives the sphere a revolution in the vertical plane parallel to the axle of the field-carriage, while the feather holds the ball rigidly against motion in any other direction. This attachment is provided that the axis of the trunnions may be leveled whenever, from the roughness or inclination of the ground, the carriage-axle has one end raised higher than the other. It also serves to accommodate the dispersion of the fire to the inclination of a slope that it may be desired to sweep.

The table above spoken of is the flat part of the carriage under the gun. Its arms embrace the axle of the carriage as hinges, while at its rear end it has "swords" extending down through the trail-piece, to which they are pinned. By removing the pins the table can be tipped forward or lowered at pleasure, at the same time rapidly changing the elevation of the gun. It was with a view to obtaining a wider range of elevation than could be given by the ordinary elevating apparatus, and as a means of rapidly changing the elevation, that led to the adoption of the table.

The only remaining distinctive feature of this field-carriage to be described is the method for transporting ammunition. The crates for this purpose are made of bronze, firmly secured to the axle, and are further braced with angle-irons coming back on and bolted to the arms of the trail. These two crates stand on each side of the gun, and are designed to carry in each three boxes of ammunition, each box to contain five hundred rounds, when packed in the new tin holders. They

* The firing-record is replaced by the one made by the gun when firing for endurance, which is thought to be more interesting.

LOWELL BATTERY GUN.

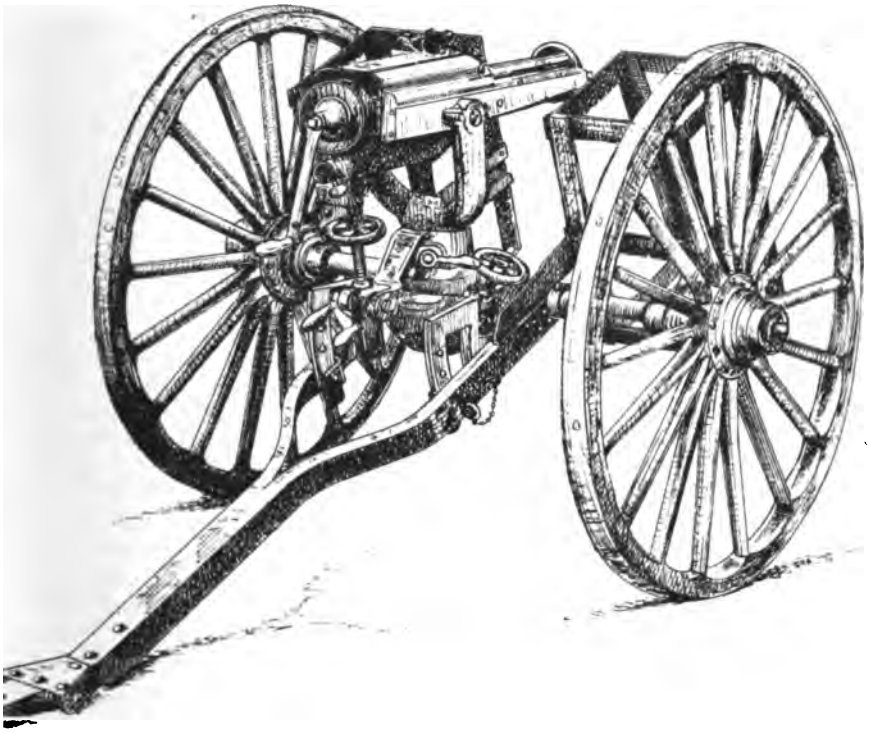

THE HELIOTYPE PRINTING CO. 220 DEVONSHIRE ST BOSTON

will not contain so many when packed in the paper boxes or holders heretofore used with this gun. It is intended to feed the gun directly from the boxes in the crates, for which they are very conveniently placed. As the crates show in the picture, they interfered with the traverse of the gun when the axis of the trunnions and the axle of the carriage were not nearly parallel; and to remedy this the crates were cut down before I left Chickopee, but without impairing their capacity. This alteration gave sufficient play when the top box of ammunition was removed.

I append some weights, dimensions, &c., of the gun, as near as I could arrive at them with the implements at hand.

Weight of tripod with saddle on it and elevating apparatus attached	125 pounds.
Weight of field-carriage with saddle on it, and elevating apparatus attached, crates empty	434 pounds.
Weight of Lowell battery-gun without feeder	142 pounds.
Weight of feeder when empty	3 pounds.
Preponderance of gun on trunnions as mounted, feeder on	5 pounds.
Weight lifted in moving gun up for quick depression	24 pounds.
Weight of elevating apparatus	8 pounds.
Length of gun from muzzle of the barrels to inside edge of crank	35.9 inches.
Projection of crank to rear	3.75 inches.
Distance between sights	29.6 inches.
Total length of barrel	18.1 inches.
Thickness of barrels at breech	0.33 inch.
Caliber	0.50 inch.
Depth of chamber	1.7 inches.
Diameter of chamber	0.57 inch.
Extreme elevation on tripod, tripod head level	25°
Extreme depression on tripod, tripod head level	34°
Extreme lateral train given by traversing gear on each side of axial line.	1° 24′
Extreme elevation on field-carriage, table down	40°
Extreme depression on field-carriage, using table	42°
Axle level, tip of the gun in transverse plane from the vertical	13°
On field-carriage, gun revolves on its pivot when level, crates empty	21°
Weight of empty ammunition-box with cover	6 pounds.
Weight of empty ammunition-box cover	1.5 pounds.

I inclose with this report, for the information of the bureau above, a sectional view of the Lowell battery-gun, showing the arrangement of its parts, taken, by permission of the inventors, from the drawings of a small model gun. I also inclose tracings of the lock, full size, in plan and in elevation.

I am, sir, very respectfully, your obedient servant,

A. H. McCORMICK,
Commander, United States Navy.

Commodore WM. N. JEFFERS, U. S. N.,
Chief of the Bureau of Ordnance,
Navy Department, Washington, D. C.

a bronze arm, *t*, projects aft and upward, its upper end being forked, the fork embracing the eccentric collar.

When the crank is turned it revolves the cam-shaft, by suitable gearing, three times for every full turn of the crank. The worm on the cam-shaft drives the bevel-wheels, the larger of which carries with it in its revolutions the eccentric collar; and when the eccentric is set, by means of its adjusting-screw, with any throw, it, acting upon the forked arm connected with the traverse-block, causes the breech of the gun to move slowly backward and forward, from right to left, in the horizontal plane, about twelve shots being delivered while the muzzle is moving once from right to left.

The composition rails, supporting the barrels, which were cast in one with the "box," have been superseded by steel rails, similar to those on the Gatling gun, which are secured to the sides of the "box"; and the manner of supporting the barrels, as well as the method for revolving them, has also been changed.

The four barrels belonging to this gun are grouped around an imaginary central axis, and held in place by insertion into circular brass disks near the forward and at the after ends. These disks revolve in rings which fit smoothly to their circumferences, each disk and its ring being matched together. The disk and ring for the forward ends of the barrels are joined together somewhat as shown here, a longitudinal space being left between the disk and the ring, to accommodate any throwing forward of the disk by the expansion of the barrels in firing. The individual barrels also fit loosely in this disk. The ring hangs on horizontal trunnions, which, passing through holes in the rails near their forward ends, enter sockets in the rings.

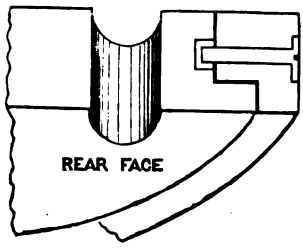

The ring and disk for the rear ends of the barrels are fitted as here shown, the disk having a groove cut around it to take the ends of screws placed at intervals through the ring, their inner ends traveling in the groove. The barrels are screwed into this disk, projecting slightly beyond its rear face, where their edges are rounded off. The ring of this disk fits upon a bearing-seat in the rails, just forward of the carrier-rolls, whose cover shuts down on two studs projecting from the rear of the ring, thus locking the rear end of the group of barrels in place. To throw up the barrels it is only necessary to lift the cover, and raise them out of their seat by the lever-handle hereafter to be described. (See No. 1, Fig. 2.)

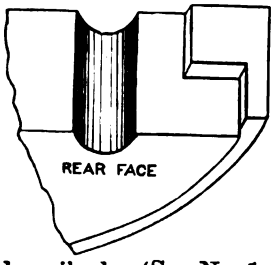

The group of barrels, supported in these two places, can be revolved around its imaginary central axis, the latter being placed at such a height relatively to the loading mechanism that the revolution of the barrels brings any desired one to the loading-position.

At present, the revolution of the barrels is accomplished by a short lever, No. 1 (fig. 2), the heel engaged at the center of the after barrel-disk and the handle projecting conveniently above the gun, the shank coming between the rear of the disk and the cover for the carrier-rolls. This lever has a spring-paul, 3, passing down through the center of its handle, the lower end of the paul bearing by spring-pressure upon the face of the slot, 4, cut in the circumference of the disk, while the upper

SECTION OF LOWELL BAT

METHOD OF REVOLVING THE B

(View From the Fron

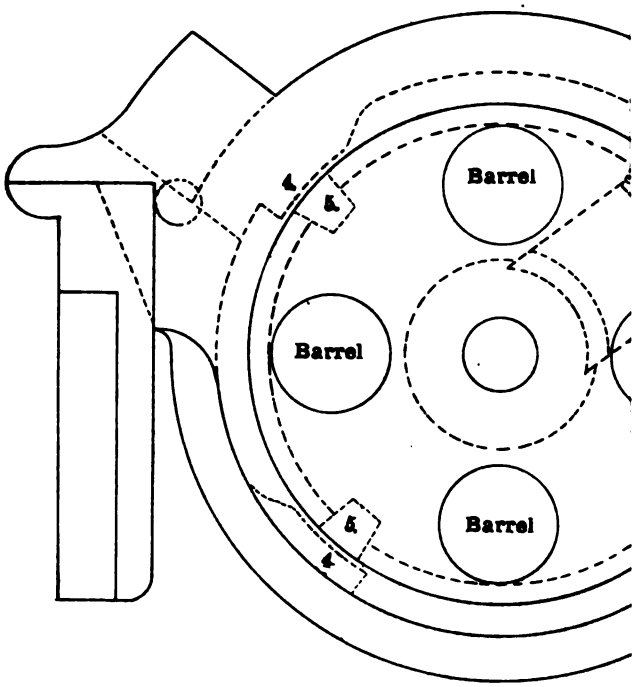

THE HELIOTYPE PRINTING CO. 324 DEVONSHIR

a bronze arm, *t*, projects aft and upward, its upper end being forked, the fork embracing the eccentric collar.

When the crank is turned it revolves the cam-shaft, by suitable gearing, three times for every full turn of the crank. The worm on the cam-shaft drives the bevel-wheels, the larger of which carries with it in its revolutions the eccentric collar; and when the eccentric is set, by means of its adjusting-screw, with any throw, it, acting upon the forked arm connected with the traverse-block, causes the breech of the gun to move slowly backward and forward, from right to left, in the horizontal plane, about twelve shots being delivered while the muzzle is moving once from right to left.

The composition rails, supporting the barrels, which were cast in one with the "box," have been superseded by steel rails, similar to those on the Gatling gun, which are secured to the sides of the "box"; and the manner of supporting the barrels, as well as the method for revolving them, has also been changed.

The four barrels belonging to this gun are grouped around an imaginary central axis, and held in place by insertion into circular brass disks near the forward and at the after ends. These disks revolve in rings which fit smoothly to their circumferences, each disk and its ring being matched together. The disk and ring for the forward ends of the barrels are joined together somewhat as shown here, a longitudinal space being left between the disk and the ring, to accommodate any throwing forward of the disk by the expansion of the barrels in firing. The individual barrels also fit loosely in this disk. The ring hangs on horizontal trunnions, which, passing through holes in the rails near their forward ends, enter sockets in the rings.

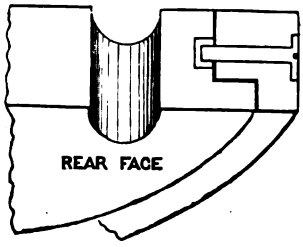

The ring and disk for the rear ends of the barrels are fitted as here shown, the disk having a groove cut around it to take the ends of screws placed at intervals through the ring, their inner ends traveling in the groove. The barrels are screwed into this disk, projecting slightly beyond its rear face, where their edges are rounded off. The ring of this disk fits upon a bearing-seat in the rails, just forward of the carrier-rolls, whose cover shuts down on two studs projecting from the rear of the ring, thus locking the rear end of the group of barrels in place. To throw up the barrels it is only necessary to lift the cover, and raise them out of their seat by the lever-handle hereafter to be described. (See No. 1, Fig. 2.)

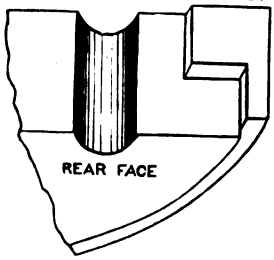

The group of barrels, supported in these two places, can be revolved around its imaginary central axis, the latter being placed at such a height relatively to the loading mechanism that the revolution of the barrels brings any desired one to the loading-position.

At present, the revolution of the barrels is accomplished by a short lever, No. 1 (fig. 2), the heel engaged at the center of the after barrel-disk and the handle projecting conveniently above the gun, the shank coming between the rear of the disk and the cover for the carrier-rolls. This lever has a spring-paul, 3, passing down through the center of its handle, the lower end of the paul bearing by spring-pressure upon the face of the slot, 4, cut in the circumference of the disk, while the upper

SECTION OF LOWELL BAT

METHOD OF REVOLVING THE B

(View From the Fron

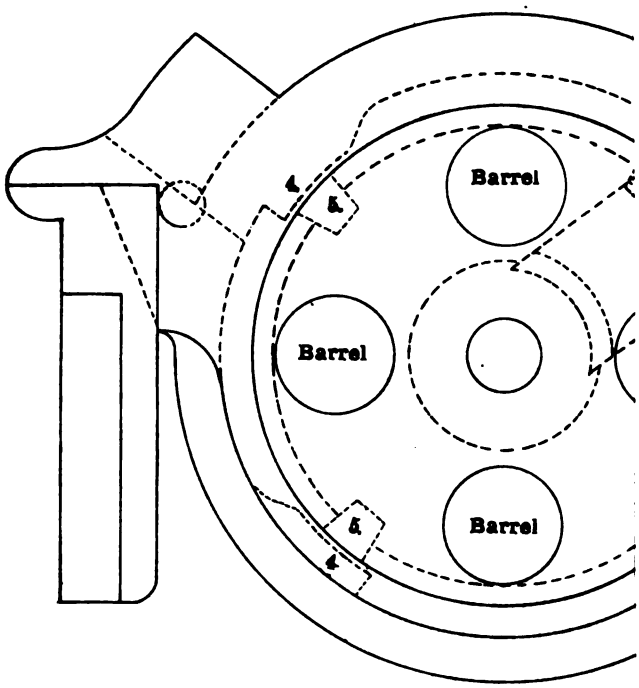

THE HELIOTYPE PRINTING CO. 302 DEVONSHIR

Record of firing Lowell battery-gun No. 105, *&c*—Continued.

	Times.	Number of cartridges fired.	Remarks.
	h. m. s.		
Ended the series	3 41 00	17,820	At the end of the series there is a failure to extract; back the shell out from the muzzle; clear all the barrels and shift the gun to the right. The barrels are very hot, but the lock and mechanism are cool or not warm enough to burn the hand; the barrels are very foul and the mechanism slightly so.
Total time consumed in firing this series.	1 33 04	.....	
Total delays in this series	11 51	.....	
Rate of firing, including all delays.	.....	*191	
Rate of firing, excluding all delays.	.....	*202	
			Prepared to test more fully the working of the new tin feed-cases. Ninety-four of them filled with United States Cartridge Company's center-primed cartridges originally loaded in 1873, reloaded in 1874, and reloaded in April, 1875 were placed in the crate-boxes to be fed alternately to their proper "feeder" by two men, one on each side of the gun; gun level and not traversing.
Commence the firing, No. 1 barrel	3 46 30	.....	At the very start a cartridge jammed in the feed-port, the cause not being apparent, unless it was from the fouling which had accumulated during the long-continued firing. Delay in revolving up No. 2 barrel, 3 seconds.
Stopped to shift barrels	3 53 15	.....	
Resumed the firing, No. 2 barrel	3 53 18	.....	
Ended series and trial of gun	3 54 35	1,410	In entering the feed-case in the "feeder" it is necessary to hold up the ends of the bullets, requiring the use of both hands. The cartridges must then be forced down with the finger out of the feed-case, and the feed-case is removed, the "feeder" is always one-half empty. The necessity for using both hands is objectionable. With great rapidity of fire it would be difficult to keep the "feeder" supplied. At end of trial, gun shows no wear in any of its parts.
Time consumed in this series	8 05	.....	
Delays in this series	03	.....	
Rate of firing, including delay	.....	*175	

* Per minute.

RÉSUMÉ OF FIRING RECORD.

Total number of cartridges fired (of ammunition reloaded in 1875)	32,610
Burst the shell at the side	1,844
Burst in the head	9
Missed fire at the first trial	145
Missed fire at the second trial	130
Total number of cartridges fired (ammunition loaded in 1874)	17,820
Burst the shell at the side	1,924
Burst in the head	0
Missed fire at the first trial	136
Missed fire at the second trial	74
Total number of cartridges fired	50,430

Respectfully submitted.

A. H. McCORMICK,
Commander, United States Navy.
EDWARD W. VERY,
Lieutenant, United States Navy.
NAVAL EXPERIMENTAL BATTERY,
Annapolis, Md., July 16, 1877.

Commodore WILLIAM N. JEFFERS, U. S. N.,
Chief of the Bureau of Ordnance.

No. 219.] NAVAL EXPERIMENTAL BATTERY,
Annapolis, Md., July 28, 1877.

SIR: I have the honor to inclose the table and formula for the elements of the trajectory of the Lowell battery-gun. They are worked entirely by theory and have been checked by a series of firings. The result of the firings is as follows:

Against a wind nearly ahead, of a force of about three miles per hour:

100 yards	16′ 12″	500 yards	1° 27′ 07″
200 yards	31′ 49″	600 yards	1° 55′ 46″
300 yards	47′ 18″	700 yards	2° 29′ 24″
400 yards	1° 05′ 06″		

Against a wind directly ahead, of a force of about five to six miles per hour:

300 yards	0° 35′	800 yards	3° 00′
400 yards	1° 10′	900 yards	4° 15′
500 yards	1° 25′	1,000 yards	4° 40′
600 yards	2° 30′	11 yards	5° 10′
700 yards	2° 40′		

There was considerable variance in the results, owing to the jarring of the gun in volley-firing. The method of fastening the gun by the clamp for lateral movement is defective, as, notwithstanding its being set as taut as possible by hand, the resistance of the bullets to the rifling caused the gun to turn to the left. In a single volley of fifteen shots the point of impact of the last would be about 8 feet to the left of that of the first at 100 yards. The clamp, however, never worked slack.

I have to report the breaking of one of the extractor hooks of the lock. It had stood about 52,000 rounds, and was broken about a half inch from the end, by a hang-fire. The cartridge was entirely in the rolls, and the case was unsupported. The fracture was clean, and from its looks I do not think that the metal had been weakened before. Another hook can easily be supplied, and as they take but little room I recommend that each spare lock be provided with two spare hooks, which can easily be shipped, and which are the only parts of the lock liable to be broken.

I also recommend that in any instructions sent out with the gun, a caution be inserted, that when a stoppage occurs and the barrel be jammed so that it cannot be shifted, the operator, *before uncovering the rolls*, should back the crank carefully, looking down through the aperture behind the barrels until he sees the cartridge in the rolls, which brings the lock clear of them; then raise the cover and remove the lock before making any attempt to clear the obstruction. The extractor grasps the cartridge while pushing it forward, and there is great danger of giving the crank a slight turn ahead after the covers are raised and the cartridge exposed, causing the firing-pin to explode the cartridge, when the bullet might strike the barrel-frame and would certainly spatter lead all about the gun.

I am, sir, very respectfully, your obedient servant,

EDWARD W. VERY,
Lieutenant and Inspector of Ordnance.

Commodore W. N. JEFFERS,
Chief of Bureau of Ordnance.

Forwarded.

C. R. P. RODGERS,
Rear Admiral, Commanding.

Elements of the trajectory of the Lowell gun.

Range.	Remaining velocity.	Time of flight.	Elevation.			Height of rear sight.	Drift.	Dangerous space for infantry.	Energy of bullet.	Ordinates of 1,100 yards trajectory.
Yards	*Feet.*	*Sec.*	°	′	″	*Inches.*	*Feet.*	*Yds.*	*Ft. lbs.*	*Feet.*
0	1,300	.0000	0	0	0	.0000	.0	580	1,690	0
100	1,115	.2485	0	11	22	.0979	.5	556	1,243	20
200	976	.5272	0	25	36	.2204	1.0	247	952	35
300	868	.8302	0	42	20	.3644	2.0	140	753	53
400	781	1.152	1	01	12	.5268	3.3	90	610	61
500	710	1.491	1	21	54	.7052	4.3	68	504	65
600	651	1.846	1	44	38	.9011	6.0	49	424	69
700	600	2.210	2	08	32	1.1073	8.5	41	361	67
800	559	2.580	2	33	16	1.3205	10.0	35	312	56
900	521	2.963	2	59	39	1.5481	12.5	30	271	42
1,000	489	3.352	3	27	06	1.7823	15.0	22	239	24
1,100	460	3.750	3	55	43	2.0279	18.0	18	212	0

FORMULAS USED IN THE COMPUTATIONS.

Remaining velocity.

$V' = \frac{V}{1 + c V x}$

V' = remaining velocity.
V = muzzle velocity (1,300 feet).
x = range.
$c = b \frac{r^2}{w}$
b = .000062.
R = radius of bullet in feet (.021).
W = weight of bullet in pounds (.0643).

Drift.

Estimated from actual firing on the range.

Marks on the light bar.

$M = a + b$.
M = total height necessary to raise bar.
a = height of front sight above trunnion level.
b = depth of rear sight below trunnion level.
a = l tang. α.
l = distance between center of trunnion and center of rear sight notch.
α = angle of elevation.
b = l' tang. α.
l' = distance between center of trunnion and upper point of front sight.

Time of flight

$T = \frac{x}{V''}$

T = time of flight.
x = range.
V'' = mean velocity = $\frac{1}{2}(V + V')$.

Angle of elevation.

Tang. $\alpha = \frac{s}{x}$

α = angle of elevation.
x = range.
s = drop of bullet due to gravity.
$s = \frac{1}{2} g t^2$.
g = gravity = 32.155 feet.
t = time of flight.

Energy of bullet.

$E = \frac{W V^2}{2g}$.

E = energy in foot pounds.
W = weight of bullet in pounds.
V' = velocity at range.
g = gravity (32.155).

Dangerous space for infantry.

$D = h$ cotang. α.
D = dangerous space.
h = average height of man (5′.5).
α = angle of fall of bullet.

Ordinates of 1,100 yards trajectory (measured from constructed trajectory.)

To construct the trajectory.

Lay off the desired range, and at the extremity erect a perpendicular equal in length to the fall of the projectile due to gravity during the extreme time of flight. Draw a hypotenuse to the triangle, and on the base erect perpendicular cutting the hypotenuse. From the hypotenuse measure on the perpendiculars the lengths of fall due to gravity for the time of traversing each hundred yards. The curve passing through these points will be the trajectory required.

Weight of bullet, 450 grains.

Muzzle velocity, 1,300 feet.

Horizontal distance from center of rear sight to center of trunnions, 11.04 inches.

Horizontal distance from rear of front sight to center of trunnions, 18.56 inches.

Height of center of muzzle when level, above solid platform, 42.25 inches.

Height of center of trunnions above platform, 39.7 inches.

EDWARD W. VERY,
Lieutenant and Inspector of Ordnance.

UNITED STATES TORPEDO STATION,
Newport, R. I., September 29, 1877.

SIR: In obedience to orders of the 20th instant, we have witnessed the examination of the class under torpedo instruction conducted in accordance with the programme prepared by Capt. K. R. Breese, commanding station, and approved by the bureau.

It has been exceedingly gratifying to us to see the skillful and successful manner in which the experiments allotted to the different members of the class (which embraced all the faults and accidents liable to occur in practice) were performed.

When all have done so well, it may seem invidious to particularize; but the board desires to mention the circumstance of the invention of a fuse by Lieutenant Gilmore, which seems to be simple and reliable, and easily prepared from material always to be found on board ship.

We desire to speak in complimentary terms of the three commanders in attendance, who, although by their orders not required to undergo an examination, yet undertook and successfully performed the operation of blowing up a wreck, using the outfit ordinarily supplied to a cruising vessel of war. The board are informed that throughout the course these gentlemen have been constant in attendance and earnest in their efforts to profit by the course of instruction.

We also desire to speak in terms of commendation of the papers submitted by the members of the class upon the subject of torpedo-warfare, offensive and defensive, which show that the subject has received their careful attention.

While the bureau is familiar with the character of the officers and instructors of the station, yet the board deem it but just to add their commendation. Lieutenant McLean exhibited the successful operation of a steam-launch by an electric apparatus, of his invention, placed on the wharf.

We cannot but regret that the station is to lose the services of so valuable an instructor as Lieutenant Converse.

We would recommend that the crew of the Nina be increased to at least twenty-five men, as the present number appears to be too few to attend to the many duties required of them.

Very respectfully,

D. M. FAIRFAX, *Commodore.*
THOS. SCOTT FILLEBROWN,
Captain.
B. B. TAYLOR, *Commander.*
EDW'D E. POTTER, *Commander.*

Commodore W. N. JEFFERS, *U. S. Navy,*
Chief of Bureau of Ordnance,
Navy Department, Washington, D. C.

UNITED STATES TORPEDO STATION,
Newport, R. I., October 1, 1877.

SIR: I have to report that the board of visitors, consisting of Commodore Fairfax, Captain Fillebrown, and Commanders Potter and Taylor, visited the station on Thursday, the 27th ultimo, at 10 a. m., and were received by the officers and a salute of eleven torpedoes.

The class of officers in attendance and those under instruction were then presented to the board.

At 10.30 a. m. the board assembled in a room assigned to them, and the following papers were presented with such verbal explanations as were required:

I. The assignment of officers to duty during the course of instruction.
II. The course of instruction.
III. The programme of instruction.
IV. The course of instruction in torpedoes.
V. The course of instruction in electricity.
VI. The course of instruction in chemistry and explosives.
VII. The course of instruction in fuses and torpedo-warfare.
VIII. Programme of the examination as approved by the bureau.

The board having announced their readiness to witness the examination, and having made the detail of the officers under instruction, in accordance with the programme proceeded to visit the different establishments of the station in order.

The names of the officers assigned by the board to the questions are given, and at the places specified they were found in readiness to explain the general character and uses of the outfit or to remedy their defects before the board.

While some were explained with greater readiness than others, without exception the explanations of the class were satisfactory and conclusive of their knowledge and use of the torpedo-outfits as supplied to the ships of the Navy, and also of the attention paid to the subjects of the lectures during the course of instruction.

Selections among the officers could have been made in certain cases that would have given more apparent credit to the instruction, but, as the assignment was made by the board at hap-hazard, without any reference to the abilities of the class, and the result establishing the fact of the familiarity of the officer with the subject, I have to think the plan adopted was the fairest to represent the general character of the course and proficiency of the individuals of the class.

Lieutenant-Commander Wood was forbidden by the surgeon to take part in the written course for the two or three weeks previous to the examination, and also from appearing before the board; but I am glad to say that his great attention prior to his illness established his capacity, and that an examination would probably only have still further developed it.

The weekly-examination books of the class, while not averaging as good as those of the class of last year, were fairly kept, and contain the gist of much information valuable to the officer of the future.

Comanders Selfridge, Bunce, and Norton comprised the officers in attendance on torpedo-instruction. Distinction was always made between the officer in attendance and the officer under instruction. The latter was required to conform to the course as approved by the bureau, and the former simply to attend the course. These officers did everything that the class were required to do, except submit their books for revision by the instructors. They were constant in attendance, very attentive, and took the same, or a superior part in all practical exer-

cises as the members of the class of instruction. No class have left the station in the past three years superior to these commanders in knowledge of the subjects taught here.

As no place had been assigned them in the order for examination, an old hulk was offered to them and placed on the south end of the island as an obstruction to a channel, to be destroyed by the means found in any torpedo-outfit of a ship or squadron, thus exhibiting to the board their familiarity with the subject. Dynamite was substituted for gunpowder, as in war-time it probably would be found on shipboard for such emergencies. The filling, fusing, and placing of the torpedoes used were personally supervised by these gentlemen, and the hulk was destroyed.

There was exhibited to the board a steam-launch fitted with the steering-gear proposed by Lieutenant McLean in accordance with the bureau's directions to prepare a service steam-launch to be set off and controlled by an electric cable; and, although it was the first experiment and the fittings were of a rude character, sufficient was demonstrated to pronounce upon the feasibility of the plan used.

The Lay boat and Ericsson boat were shown to the board but not run.

Professor Farmer's relay to the Lay boat was shown, and the demonstration of one hundred and twenty-eight different things over one wire was made.

An exhibition of the electric light was given for signaling, lighting ships, and lighting up against attack, &c. The Siemens machine on this occasion failed, and the Farmer was substituted for it. Subsequent examination discovered the fault to be not in the machine but in the driving-belts.

The board were taken to the chemical laboratory, where Professor Hill showed his mode of lecturing, and exhibited the principal objects of interest.

At the electrical laboratory Lieutenant Converse explained his circuit-indicator and its advantages.

The very great interest and attention evinced by every member of the board in the explanations by the officers of class, and the subsequent inspection of the station, together with the pertinent questions asked by them, gave a color and an interest to the close of the term of instruction I have never before experienced. Doubtless the board have expressed their satisfaction to the bureau, and I hope it may not be unbecoming in me to state the gratification of the officers of the station and of the class at the appreciation by the board of their labors during the past course.

The instructors have, as usual, been most faithful in the discharge of their duties, and, although the officers in attendance and under instruction embraced all grades from commander to ensign, the dignity of no one was affected, nor was there complaint made.

Respectfully, your obedient servant,

K. R. BREESE,

Captain, U. S. N., Inspector of Ordnance, in charge of Station.

Commodore W. N. JEFFERS, U. S. N.,

Chief of the Bureau of Ordnance, Navy Department,

Washington, D. C.

I.

UNITED STATES TORPEDO STATION,
Newport, R. I., June 1, 1877.

ASSIGNMENT OF THE OFFICERS OF THE STATION TO DUTY.

Lieut. G. A. Converse, U. S. N., senior assistant inspector of ordnance, and instructor in electricity, fuses, and diving.

Lieut. J. S. Newell, U. S. N., assistant inspector of ordnance and instructor in torpedoes.

Lieut. A. R. Couden, U. S. N., assistant inspector of ordnance and instructor in electricity.

Lieut. T. C. McLean, U. S. N., assistant inspector of ordnance, in charge of drawings, plans, records, &c.

Gunner William Burditt, U. S. N., in charge of machine-shop.

Prof. M. G. Farmer, electrician.

Prof. W. N. Hill, chemistry and explosives.

K. R. BREESE,
Captain, U. S. N., Inspector of Ordnance, in charge of Station.

II.

COURSE OF INSTRUCTION.

[Embraces the months of July, August, and September.]

The attendance of officers for instruction will be from the 9.30 a. m. to the 2.20 p. m. boat.

The day is divided into two periods.

First period from 9.45 a. m. to 11.45 a. m.

Second period from 12.15 p. m. to 2.15 p. m.

The following division of time will be observed, unless due notice is given of change:

	First period, 9.45 a. m. to 11.45 a. m.	Second period, 12.15 p. m. to 2.15 p. m.
Monday	Electricity	Electricity.
Tuesday	Torpedoes	Chemistry or explosives.
Wednesday	Electricity	Electricity.
Thursday	Chemistry or explosives	Torpedoes.
Friday	Torpedoes	Examination papers.

The principal instructor will assign the whole or part of a class to a period.

III.

The officers under instruction will be divided according to rank in two parts, and will be known as the senior half and the junior half.

Any change of programme from the established order will be posted in the officers' room at the machine-shop.

Pocket note-books will be furnished the class for daily notes, and a blank-book for each branch of instruction, in which drawings and examinations will be recorded.

Questions bearing upon the lectures will be given out at their close; and the replies, carefully given and neatly written in the blank-books furnished for the purpose, must be handed in to the commanding officer on Monday.

The books will be examined by the instructors, errors noted, and then returned by the commanding officer with such remarks as may be deemed necessary.

The final examination will be of a practical character before the board of visitors, and the books of the class are to be submitted to the board.

Opportunity will be given to officers to practice in diving and submarine work connected with torpedoes, and, at the close of the term, such officers as show themselves proficient will receive certificates as divers.

Officers who desire to continue their studies will be (if circumstances permit) allowed to remain, and be attached to the station.

The course as above prescribed has been approved by the Chief of the Bureau of Ordnance and the honorable Secretary of the Navy.

K. R. B. REESE,
Captain, U. S. N., Inspector of Ordnance, in charge of Station.

IV.

TORPEDO STATION,
Newport, R. I., September 27, 1877.

SIR: During the course of instruction just completed there have been given in torpedoes fourteen lectures, of two hours each, and twenty-two periods of practical work, each period covering at the least two hours.

Lectures have been given upon the following subjects, and in the order mentioned:

One on the means of exploding torpedoes now employed in the service, and the manner of fitting service-torpedoes.

One on service spar-torpedoes, and the history of torpedo-warfare.

Two on the general division of torpedoes, history of the spar-torpedo, and the outfits of ships.

Two on splicing cables; permanent wires on board ship; improvised torpedoes; ship's fittings; service boat-fittings, including other plans; monitor and tug fittings.

One on improved boat-fittings and fast torpedo-launches.

One on experiments with towing-torpedoes.

Two on the Harvey sea-torpedo.

Two on the French and Danish towing-torpedoes, movable torpedoes, and Ericsson's movable torpedo.

Two on the Lay torpedo, defense of ships against torpedo attacks, and the removal or clearing of a channel when obstructed by torpedoes.

The practical work has been so arranged as to follow the lectures upon the different subjects, illustrating the practical application of the lectures.

One period in detecting faults in electrical apparatus used in connection with service torpedoes, wires, and fuses.

One period in fusing, handling, and exploding exercise-torpedoes (5 pounds), two officers to each torpedo.

Four periods in exploding service 75-pounder torpedoes, each officer filling, fusing, and exploding one from a launch.

One period, each officer improvised a torpedo from jugs, cans, bottles, &c., furnished for the purpose, and exploded the same.

One period, each section of the class grouped and exploded together twelve improvised torpedoes.

One period in fitting, fusing, and exploding four service 100-pounder torpedoes from the Nina under a floating target.

Thirteen periods in the practical use of the Harvey sea-torpedo, each member of the class making two attacks upon the schooner Joseph Henry. The first attack the schooner did not try to evade, but the second attack every effort was made to evade the torpedo. In the latter case, at times, two torpedoes were towed from the Nina, one on each side, the schooner being defended by the same. The schooner, on all occasions, had on board a portion of the class who had charge.

Very respectfully, your obedient servant,

J. S. NEWELL,

Lieut., U. S. N., Assistant Inspector of Ordnance and Instructor.

Capt. K. R. BREESE, U. S. N.,
Inspector of Ordnance, in charge of Station.

V.

UNITED STATES TORPEDO STATION,
Newport, R. I., September 26, 1877.

SIR: The instruction in electricity for the term now ending has consisted of the following lectures delivered before the class:

1. Technical terms, meaning of.
2. Galvanic batteries.
3. Galvanic batteries continued.
4. Galvanic batteries continued.
5. Electric currents, laws of.
6. Electric currents, measurement of.
7. Electric resistance, laws of.
8. Electric resistance, laws of, continued.
9. Electric currents, heating effects of, application to electric fuse-making.
10. Electric resistance, measurement of.
11. Strength of current, electro-motive force and battery resistance, measurement of.
12. Electro-motive force and battery resistance, measurement of.
13. Battery resistance, measurement of.
14. Arrangement of battery cells for any particular work.
15. Magnets and magnetism.
16. Ampère's theory of magnetism and electro-magnetism.
17. Electro-magnetic induction.
18. Induction machines, Wilde's small machine.
19. Farmer's machine, pattern A.
20. Farmer's machine, patterns A and C, Siemens' small machine.
21. Comparison of machines which have a high resistance and have a high electro-motive force, taking Siemens' machine as a pattern, with machines which have a small resistance and a small electro-motive, taking Farmer's machine as a pattern.
22. Wheatstone's, Breguet's, Beardslee's, and Gramme's machines.
23. Electrical apparatus of Lay's boat.
24. Friction as a source of electricity, Smith's machine.
25. The source of electricity most suitable for torpedo purposes in service afloat.

This course of lectures has been supplemented by a course of practical work of four hours per week.

This work has consisted in setting up batteries, measurements of resistance, insulation, electro-motive force, battery resistance, strength of current, using various methods, measurement of machines, calculation of resistance from dimensions and quality of conductors, calculation of number and arrangement of battery cells necessary to do certain work, same for machines, repairing faults in machines purposely out of order, and other work of the same nature.

Very respectfully,

A. R. COUDEN,
Lieutenant and Assistant Inspector of Ordnance.

Capt. K. R. BREESE, U. S. N.,
Inspector of Ordnance, Commanding Torpedo Station.

VI.

COURSE OF INSTRUCTION IN CHEMISTRY AND EXPLOSIVES.

Chemistry.

1. Chemical theory; formula and equations.
2. Oxygen; oxides; bases.
3. Atmosphere; ozone; hydrogen; natural waters.
4. Nitrogen; nitric acids and nitrates; action of nitric acid on organic bodies.
5. Acids and salts; compound radicals ammonia.
6. Fluorine and hydrofluoric acid; chlorine.
7. Hydrochloric acid; bromine; iodine.
8. Sulphur; sulphuric acid.
9. Bi-sulphide of carbon; phosphorus; arsenic.
10. Antimony; silicon and silicates.
11. Carbon; carbonic acid; preparation of liquid carbonic acid and its use as a motor.
12. Iron and iron smelting.

Explosives.

1. Explosive reactions; explosive effect.
2. Detonation; general composition of explosive bodies.
3. Explosive mixtures; gunpowder begun.
4. Gunpowder continued, materials for, and process of manufacture.
5. Gunpowder continued, manufacturing processes.
6. Gunpowder continued, tests; results of explosion; force.
7. Gunpowder completed; effect of condition; regular grain.
8. Chlorate mixtures.
9. Nitro-glycerine; manufacture; properties; use.
10. Dynamite; manufacture; properties; use.
11. Gun-cotton; manufacture; properties; use.
12. Picrates; picric powder; fulminates; fulminating mercury.

Lectures illustrated by experiments and diagrams, and drawings projected on screen by calcium light.

Class present at time of making nitro-glycerine and dynamite.

Experiments made with different explosives.

VII.

UNITED STATES TORPEDO STATION,
Newport, R. I., September 26, 1877.

SIR: I respectfully submit the following report of practical work in fuse-making during the term of instruction just ended. Four hours per week have been occupied in this work.

Each officer has been required to make the following fuses and igniters:

Ten D. E. wooden case igniters; ten D. E. copper case igniters; three improvised fuses, Barber's; three improvised fuses, Moore's: three improvised fuses, Pillsbury's; three improvised fuses, from wire to be supplied; one original.

In addition to this, lectures have been delivered before the class as follows:

1. The various methods of determining the position of a ship with reference to any individual torpedo or group of torpedoes in a defensive system, and the electrical apparatus used for testing and firing such torpedoes; explaining the methods of determining the position of a ship by cross-bearings, use of plane-table, electric position-indicator, and camera obscura, and the use of testing and firing apparatus for systems of this kind.

2. Continuation of subject of previous lecture, explaining use of circuit-closer, circuit-breaker, and circuit shunts; exhibited and explained the English shutter apparatus and the circuit-indicator.

Very respectfully, your obedient servant,

G. A. CONVERSE,
Lieutenant and Assistant Inspector of Ordnance.

Capt. K. R. BREESE, U. S. N.,
Inspector of Ordnance, Commanding Station.

VIII.

The examination of the class will be by practical work in the presence of the board of visitors, and as soon as they announce their readiness the class will be assigned by twos or otherwise (at the discretion of the board) to take up, exhibit, and describe the following:

I.

1. Fire exercise-torpedoes from launches.
Fire 75-pounder torpedoes from launches.
2. Test permanent wires on board ship for continuity.
3. Explain Ericsson torpedo to the board.
Assigned to Lieutenant-Commander Woodward and Lieutenant Selfridge.

II.

1. Fire 100-pounder torpedo from Nina.
Blowing up raft by 100-pounder torpedo from Nina.
2. Test reel of insulated and spar-leading wires for insulation.
3. Explain Lay No. 1 to board.
Assigned to Lieutenant Berry and Ensign Fiske.

III.

1. Improvised torpedo.
2. Detection of faults in C machine. (Bell-hammer bent; wire of R coil broken; R coil short-circuited.)

3. Explain the service cast-iron torpedo.
Assigned to Lieutenant-Commander Sterling and Lieutenant Franklin.

IV.

1. Fire group of torpedoes with C machine.
2. Use of articles found in supply-box.
3. Detection of faults in wires.
(Wire broken inside of insulation; short circuited ends of wire in contact at machine or in contact within the case.)
Assigned to Lieut. Commander Elmer and Master Kilburn.

V.

1. Fit, launch, and tow Harvey torpedo, and make attach against Joseph Henry under way.
2. Set up a Kerite firing-battery.
3. Explain Lay No. 2 to board.
Assigned to Lieutenant Forsyth and Master Ellery.

VI.

1. Explain Harvey torpedo.
2. Given 100 igniters arranged in 5 groups of 20 each—200 feet leading wire. No. of station cells. E. M. F. = R. = group battery for the best effects for firing fuses.
3. Explain manufacture of igniter and fuse, and the object of their use to the board.
Assigned to Lieutenant Hunker and Ensign Winder.

VII.

1. Explain torpedo charged with dynamite from boat.
2. Detection of fault in fuse (broken bridge or short circuit).
3. Explain the Harvey torpedo.
Assigned to Lieutenant Berry and Ensign Fiske.

VIII.

1. Explode torpedo charged with gun-cotton from boat.
2. Detection of fault in A machine.
(Commutator short circuited or dirty—springs of commutator not in contact.)
3. Explain object of insulating wires; method of making splices and insulating them.
Assigned to Lieutenant Gilmore and Ensign Danner.

IX.

1. Explode charge of dynamite.
2. Describe torpedo outfit to the board.
3. Given battery and 3 lengths of insulated cable, 2 call-bells and 2 press-knobs. Connect in circuit for signaling so that signal shall be repeated at signal-station.

X.

1. Explosion of charge of frozen dynamite. (This includes making firing charge.)
2. Detection of fault in firing-key (dirty contact points, short circuit

spring bent, needle shows no deflection due to rusty pivot, swelling of wood, or broken coil, or short circuited).

3. Explain in general terms the process of manufacture of nitro-glycerine and conversion into dynamite.

COUDEN'S SHUNT METHOD.

During the past year careful tests and comparisons have been made at this station of the relative merits of various methods of determining the internal resistances of galvanic batteries. Among all of these, none seemed to give better results than what is called the "shunt method."

This method, as usually practiced at this station, is as follows: Introduce into the circuit of a galvanic battery a convenient rheostat and a suitable fine-wire galvanometer. Open and adjust the rheostat until a convenient deflection is obtained (42° 21′ is liable to least error), note carefully the deflection. Next reduce the total external resistance of the circuit one-half. (This presupposes that the rheostat, as opened, offers more resistance than the galvanometer.) The needle will now be deflected more than it was at the first observation. If now another adjustable rheostat be used as a shunt across the terminals of the battery, this shunt can be so adjusted that the reading of the galvanometer shall return to the same position as in the first observation. When this is the case, the resistance of the shunt is equal to the internal resistance of the battery. This method answers well enough for constant batteries, but for those that polarize rapidly, as does the Leclanché, repeated and careful trials are often needed in order to obtain satisfactory results, and it is sometimes impracticable to secure the initial and instantaneous value of the resistance sought.

Lieut. A. R. Couden, U. S. N., instructor at this station, conceived the idea that if the two changes, viz, shortening the resistance and applying the shunt, were made simultaneously, there should be at the first instant no movement of the needle, if the proper shunt were first chosen. He availed himself of the two keys used in manipulating the Wheatstone's bridge to carry out his idea. The results were quite satisfactory, but the two keys being independent of each other, and far apart, required two fingers to press them, and sometimes failed to operate with complete simultaniety. To remedy this, I had constructed for him a key with a single finger-piece, but with two independent contact closers, which admitted of such adjustment as to secure the required simultaneous closing of the two circuits when the key was depressed.

The apparatus as thus constructed operates with entire satisfaction. Measurements have been made with it of 40 bichromate cells, in groups of 10, 20, and 40 in series, and the sum of two 10's agrees within one per cent. of the result of measurements of 20 in series, and so do the measurments of two 20's agree with that of one 40 quite as nearly. Likewise the 40 cells grouped in 5 rows of 8 in series gives within less than two per cent. the same value for the average resistance per cell. This method is remarkably well adapted for making tests of the instantaneous resistances of inconstant cells, not only those in which the internal resistance varies, but those in which the electro-motive force falls off quickly upon a prolonged closure of the circuit.

Another advantage of the method is, that galvanometers of various construction can be readily used; those in which the resistance varies from 10 ohms to 2,000, and satisfactory results are attainable.

Its practical working is likely to be much more satisfactory than Maure's method, inasmuch as one is not likely to find at hand, ordina-

rily, a galvanometer adapted to making measures with Maure's method to such a nice degree of accuracy.

MOSES G. FARMER,
Electrician.

UNITED STATES NAVAL TORPEDO STATION,
NEWPORT, R. I., *December* 16, 1876.

UNITED STATES TORPEDO STATION,
Newport, R. I., January 23, 1877.

SIR: I have to inclose herewith a letter of Lieut. G. A. Converse, U. S. N. (with an indorsement of Professor Farmer), describing different ways of splicing the leading wires and torpedo cables, which I have to recommend for adoption in the service in place of the present method. Samples forwarded by express. Also modifications and improvements in electric primers, a primer connection, and a form of union designed to be used at guns when fired by electricity; all of which is approved and samples sent by express for the approval of the bureau.

Respectfully, your obedient servant,

K. R. BREESE,
Captain, U. S. N., Inspector of Ordnance, in Charge of Station.

Commodore W. N. JEFFERS, U. S. N.,
Chief of the Bureau of Ordnance, Washington, D. C.

UNITED STATES TORPEDO STATION,
Newport, R. I., January 22, 1877.

SIR: I respectfully submit for your consideration the accompanying—

"Proposed substitute for the present method of splicing the torpedo cables and leading wires now issued to ships.

"Modifications and improvements in electric primers.

"A primer-connection.

"A form of union designed to be used at guns when firing by electricity."

Very respectfully, your obedient servant,

G. A. CONVERSE,
Lieutenant, U. S. N., and Assistant Inspector of Ordnance.

Capt. K. R. BREESE, U. S. N.,
Inspector of Ordnance, in charge of Torpedo Station.

Referred to Professor Farmer for an indorsement on the electrical principles involved.

K. R. BREESE,
Captain, U. S. N., Inspector of Ordnance, in Charge.

PROPOSED SUBSTITUTES FOR THE PRESENT METHOD OF SPLICING THE TORPEDO CABLES AND LEADING-WIRES NOW ISSUED TO SHIPS.

In all insulated wire now issued to ships for permanent wires, for spar leading-wires, and torpedo-cable, the conductor consists of seven strands of small copper wire, and is, therefore, very flexible. Should it

become necessary to join two pieces of cable together it can be done by knotting the wire by, 1st, a sheet-bend; 2d, a reef-knot; 3d, a carrick-bend.

Either of the methods can be used, but it is believed that the sheet-bend can be most easily and readily made, as the "becket" can be formed by bending the end of one of the wires back on itself, and, this being done, there remains but one wire to manipulate and haul taut.

In all cases, after the bend or knot has been made, haul the wires as taut as possible before trimming off the ends.

Advantages over present form of splice:

1st. The "splicing-nippers and splicers" now furnished in the supply box can be abolished.

2d. No special instruction is necessary to enable a sailor to make a perfect splice, and it is believed that the operation can be more quickly performed than by the present arrangement.

3d. It is the strongest way of joining two pieces of wire.

4th. The electrical properties are all that can be desired.

THE ELECTRIC PRIMER.

The modifications and improvements are—

1st. In the operation of putting in the bridge, greater uniformity in the length, and consequently in the electrical resistance, being obtained.

2d. A method of "rounding up" the quills, so that the primers will enter the vent of guns freely.

3d. A method of "choking in" the quills and securing them firmly to the wires.

4th. In the general "get up" of the whole primer.

THE PRIMER-CONNECTION FOR CONNECTING THE PRIMER TO THE LEADING-WIRES.

A quick and easy method of attaching and detaching the primer from the leading-wires and so arranged that the operation can be performed while the gun is being loaded.

To attach a primer.—See that the lower end of the connection is turned back as far as the slot will permit; insert the ends of the wires of the primers, one wire in each hole in the base of the connection, and then turn the lower part around as far as the slot will allow. The primer is firmly held and the electrical contact is good.

After the primer has been inserted in the vent nearly the whole length of the wires, bend the latter at a right angle, which brings the connection clear of the blast of the vent.

To detach the primer.—Turn the lower end of the connection back as far as the slot will permit, and give the primer a slight jerk; it will be detached quite easily.

THE UNION.

As an element of safety while loading, and for the purpose of allowing the primer to be connected to the leading-wires and inserted in the gun before pointing, a break is made in the leading-wire just in rear of the gun, which is to be closed the instant the gun is "laid."

As the bridging over of this break works the indicator on the spar-deck, and announces to the officer stationed there that the gun is ready, it is desirable that this operation should be performed by the person pointing the guns.

To accomplish these results, a bight of the leading-wire hangs down in rear of the gun, sufficiently long to permit the captain of the gun to hold the end in his hands while pointing. This wire is severed and the ends are attached to the union. The captain of the gun holds an end in each hand, and the instant the gun is sighted joins the union.

In devising a suitable union for this purpose, the following points have been considered:

1st. As the break is introduced for safety, it should be so arranged that it is not liable to be closed by accident.

2d. It should be of such a nature that its condition, *i. e.*, closed or broken, can be determined at a glance by all stationed at the gun while loading, or until the captain of the gun has taken it in his hand.

3d. When closed it is a signal that the gun is ready for firing, and as the firing-current is to pass over the same wire, the break should of its own accord remain closed until intentionally broken. This requirement precludes the use of a press-button, or similar contrivance, for, having a tendency to automatically break the circuit, it would require the *simultaneous action* of two persons to fire a gun, or of *five* to fire a broadside in the case of the Trenton. Therefore no arrangement, designed either to break or close the circuit automatically, can be used.

I cheerfully indorse the above as fulfilling all the necessary electrical conditions. I would call attention to the "primer-connection," which insures the formation of a clean, firm, and permanent electrical contact. The important features of the "safety-union" are, 1st, its condition can be readily seen at any time by all persons handling the gun; 2d, its non-automatic character reduces to a minimum the number of men required.

Very respectfully,

MOSES G. FARMER,
Electrician.

UNITED STATES TORPEDO STATION,
Newport, R. I., March 21, 1877.

SIR: I had hoped to be able to forward with the corrected invoice of the Trenton's electric apparatus a detailed description, with drawings, but owing to the want of a practiced draughtsman, and the fact that Mr. Converse and Mr. Couden are very much occupied, I have been unable to do so.

The following extracts of a report made to me I give in explanation to the bureau's indorsements on the original invoice sent to the bureau, and will forward, as soon as possible, full and detailed drawings and descriptions:

The apparatus furnished was for two distinct purposes, first, firing guns and torpedoes; second, calls and automatic fire-alarm.

That intended for guns and torpedoes was designed to place the firing under the control of a single officer stationed at some central point, who shall be able to fire any gun when it is ready, or either or both broadsides, or as much of a broadside as may be ready.

The fact that a gun is ready to be fired should be automatically signaled to the officer firing the guns. This signal should only be shown while the gun is actually ready; that is, if the captain of the gun, after having once been ready, desires to change his aim, the fact that the gun is no longer ready should be known to the firing officer. The gun-captain should be able to prevent the firing of the gun by a simple movement, without self-exposure, whenever firing would result in injury to the gun, carriage, or gun's crew, or throwing away shot. The captain of the gun should know whether his primer and connections are good, independently of the signal to the officer firing.

The Trenton's apparatus fulfills these conditions, and consists of the "firing-apparatus," located on the bridge; a "tell-tale" in rear of each gun; a "wire union" at each gun and torpedo; a "primer-connection" for each gun; a "signal-battery"; a "firing-battery"; and the necessary "wire" for connecting.

The firing-apparatus contains a firing-key for each gun and torpedo, a firing-key for each broadside, a signal number or letter, corresponding to each gun and torpedo, and an electro-magnet for each gun and torpedo.

A tell-tale is a galvanometer, the movement of whose magnet displays two red quadrants in a white field. Its object is to inform the captain of the gun that his connections and primer are good.

A wire union is a simple arrangement for electrically connecting two wires. It is held in the hand of the gun-captain. When his gun is ready, he makes the connection; when not ready, he breaks the connection. Either can be done in a moment.

A primer-connection is an arrangement for connecting the primer into the electrical circuit.

The signal-battery consists of twelve large modified Le Clanché cells, and furnishes the signal-current which tells the firing-officer that guns and torpedoes are ready, and the gun-captains that their connections and primers are good. This battery also furnishes current for certain bells.

The firing-battery consists of twenty medium modified Le Clanché cells, and furnishes the firing-current for guns and torpedoes.

The wire for connecting consists of a wire from each battery to the firing-apparatus on the bridge, a wire from the firing-apparatus to each gun and torpedo, in each case connecting in tell-tale, wire union, and primer-connection, and a common return wire from all the guns to both batteries.

This common return wire is also used in connection with bells.

The apparatus for calls and fire-alarm consists of five small vibrators four large vibrators, seven push-buttons, three bell-pulls, one battery, five thermostats, one small annunciator and wire for connecting.

The five small vibrators were for orderlies, pantry-yeoman, and master-at-arms. The push-buttons and bell-pulls were for use with the bells. The four large vibrators were placed near the fore and main masts, on the gun and berth decks, for calling crew to quarters at night, and for signaling to powder-division while at quarters. They may be rung from bridge or from captain's cabin. The current for ringing them is supplied by the signal battery of twelve cells, previously described.

The five thermostats, set at 140° Fahrenheit, were placed one in each of four coal bunkers and one in general store-room.

The annunciator of four numbers is used in connection with thermostats to give alarm, and indicate locality of fire.

The battery consists of four medium Le Clanché cells (modified), and furnishes current for small bells and for the annunciator.

The wire for connecting consists of the necessary wire for connecting the battery press-buttons, bell-pulls, and bells, and for connecting thermostats, annunciator, and battery.

The wire about the ship was led through holes bored in the beams and underneath "fore and aft pieces," and covered in with ash battens or scotchmen. Where wires passed from deck to deck a brass pipe was used to protect the wires from water.

All wire-splices were soldered and insulated with rubber tubing.

The apparatus was tested after it was in place, and everything worked perfectly.

I regret to say that the cost of these articles has much exceeded the estimates, but as it was all new ground and the workmanship of a delicate and special kind, I am, in consideration of what the apparatus performs, and the experience to be gained from it, satisfied that the service will get due benefit from it.

Respectfully, your obedient servant,

K. R. BREESE,
Captain U. S. N., Inspector of Ordnance in Charge of Station.

Commodore W. N. JEFFERS, U. S. N.,
Chief Bureau of Ordnance, Washington, D. C.

PROPOSED SYSTEM OF WIRES FOR TRENTON.

For signaling:

Commander-in-chief: Call-bell on bulkhead for orderly and steward. Buttons as convenient in cabin and state-room. Commanding officer: Same. Executive officer: Call for master-at-arms.

Eight-inch gongs near foremast and mainmast, on gun and berth deck, for calls to general quarters and fire-quarters at night, for use of commanding officer or officer of deck, as desired.

Thermostats in general store-room, forward coal-bunker, starboard and port bunkers, on each deck, set to 120°, to connect with annunciator on cabin bulkhead, near captain's orderly.

For firing torpedoes:

Wires leading from electric firing apparatus to bulwarks, abreast of heels of torpedo-spars.

For firing battery:

Wires leading from electric firing-apparatus to rear of each gun on gun-deck.

The officer assigned to take charge of putting up the wires, &c., will take with him from here all the necessary material.

The position of keyboard for firing the battery and torpedoes is proposed to be placed on the bridge.

The electric primers making up for the Trenton are thought to be great improvements over the old ones, are of uniform resistance, and near the igniter for fuse for torpedoes: designed by Lieutenant Converse.

Position of battery (galvanic) to be decided on.

The above has been communicated to Commander Ramsay.

TORPEDO STATION,
Newport, R. I., July 20, 1877.

SIR: I respectfully submit the following account of a series of experiments recently made with the electric cannon-primers and primer-connections, manufactured at this station for the United States ship Trenton.

At the time the primers were made there were no facilities for testing them as fully as was desirable, owing to the want of a gun of large caliber. Experiments made at that time with the 12-pound howitzers proved the primers to be all that could be wished for guns of that class. Other experiments, made with a brass tube 0.24 inch in diameter, 0.04 inch larger than the standard for vents of guns, and 36 inches long, were sufficiently successful to justify the conclusions that the primers would fully meet all the requirements of the Trenton's 8-inch rifles. It seemed advisable, however, to make additional experiments with the largest guns in the service whenever opportunity should occur. Advantage has been taken of the presence of the Alarm, with a XV-inch gun, for this purpose; Lieutenant Paine having kindly given his consent, and greatly assisted in making the tests.

The object of the experiments was to determine—

First. (*a*) Power of the primers; (*b*) Liability of wires to obstruct the vent; (*c*) Liability of fragments of the quills to remain in the vent.

Second. Liability of moisture or salt-water to make a short circuit in primer-connection.

Third. Effect of defective insulation of leading-wires, in addition to wet connections.

Fourth. Effect of salt-water on primers.

Fifth. Effect of defective insulation of leading-wires, and salt-water on battery.

FIRST.

1. XV-inch gun. Charge, 35 pounds cannon-powder. Cartridge set home without being rammed.

(*a*) Service cartridge-bag, not pricked. Distance from top of vent to top of cartridge 21½ inches. Fired on closing circuit.

(*b*) Primer thrown entirely clear of vent.

(*c*) Quill split longitudinally, but remained fast to wires.

2. XV-inch gun. Charge, 35 pounds cannon-powder. Cartridge set home without being rammed.

(*a*) Service cartridge-bag, not pricked. Distance from top of vent to top of cartridge 22 inches. Fired on closing circuit.

(*b*) Primer thrown entirely clear of vent.

(*c*) Quill split longitudinally, but remained fast to wires.

3. XV-inch gun. Charge, 35 pounds cannon-powder. Cartridge set home without being rammed.

(*a*) Service cartridge-bag, not pricked. Distance from top of vent to top of cartridge 22¼ inches. Fired on closing circuit.

(*b*) Primer thrown entirely clear of vent.

(*c*) Quill split longitudinally, but remained fast to wires.

4. XV-inch gun. Charge, 35 pounds cannon-powder. Cartridge set home without being rammed.

(*a*) Two service cartridge-bags, one inside the other, not pricked. Distance from top of vent to top of cartridge 22¼ inches. Fired on closing circuit.

(*b*) Primer thrown clear of vent.

(*c*) Quill split longitudinally, but remained fast to wires.

SECOND.

A single cell of firing-battery, with two leading-wires, each about twenty feet long, was used.

The primer having been inserted in the "connection," the latter was entirely submerged in sea-water.

Primer fired on closing circuit.

This test was repeated three times with the same results.

THIRD.

The connections were the same as in the second experiment. Each leading wire had a splice about one inch long made in it, and both splices, uninsulated, were submerged in a cup of sea-water, the "primer-connection" being also submerged as before.

Primer fired on closing the circuit.

Repeated this experiment several times, with the same results.

FOURTH.

Primers were immersed in sea-water for upward of five minutes, without showing the slightest signs of injury or becoming damp.

All exploded with the usual force.

FIFTH.

Connections were made as in the second experiment.

Primer-connection, bare splices, and battery-cup entirely submerged in sea-water.

Primers fired on closing the circuit.

Experiment repeated several times, with the same results.

The primers used in these experiments were from the lot manufactured for the Trenton.

The battery used was a large-sized Kerite-covered zinc cup, with the Leclanché electrode covered with a bunting bag, of the same pattern as those furnished the Swatara and Trenton.*

The fragments of the primers used in the XV-inch gun are transmitted herewith.

Although these experiments undoubtedly prove that the primer is sufficiently powerful for general use in the service, I would recommend that other experiments be made, using hexagonal or other large-grained powder, whenever a favorable opportunity occurs.

I am, sir, very respectfully, your obedient servant,

GEORGE A. CONVERSE,

Lieutenant, U. S. N., and Assistant Inspector of Ordnance.

Capt. K. R. BREESE, U. S. A.,

Inspector of Ordnance, in charge of Torpedo Station.

UNITED STATES TORPEDO STATION,

Newport, R. I., May 7, 1877.

SIR: I have to inclose a report of Professor Hill on some experiments with dynamite. These experiments, although in contemplation as a part of the examination into nitro-glycerine and its compounds, were advanced by my direction, with a view of settling, if possible, a difference of opinion between Professor Hill and Lieut. R. B. Bradford relative to the action of dynamite under certain conditions.

Lieutenant Bradford quoted a French authority for the necessity of an absolutely tight vessel for dynamite, and General Abbot, United States Engineers, for the certainty of exploding frozen dynamite. Professor Hill took issue with him on these subjects.

Leaky vessels for dynamite, unfrozen, were found not to affect the explosion when left in the water for a short time. Experiment is to be made with dynamite in a basket, and from that degree to such accidental leaks as may be found in castings or made-up torpedo cases, and exposed for different lengths of time to establish whether, "after a certain time, the nitro-glycerine will be washed out of a leaky case."

The uncertainty of exploding frozen dynamite even with excessive charges of fulminate of mercury is well established.

Experiments will be made for a new fuse to explode frozen dynamite.

Respectfully, your obedient servant,

K. R. BREESE,

Captain, U. S. N., Inspector of Ordnance, in charge of Station.

Commodore W. N. JEFFERS, U. S. N.,

Chief Bureau of Ordnance, Washington, D. C.

UNITED STATES TORPEDO STATION,

Newport, R. I., April 30, 1877.

SIR: I submit the following *résumé* of the experiments of the last winter in frozen dynamite.

Our experimenting with frozen dynamite extends back several years,

* This battery was designed by Lieutenant Converse, and is known at the station as the Converse battery.—K. R. BREESE, *Captain U. S. N., Insp. Ord., in charge.*

and many experiments have been made. I must first briefly refer to these experiments.

As is well known, liquid nitro-glycerine is readily exploded by 5-10 grains of fulminating mercury, but when frozen I have never been able to fire it. Dynamite, presenting a different mechanical condition, behaves differently.

When dynamite freezes to a loose, fine powder it may be exploded with tolerable certainty by the ordinary detonating fuse (15-20 grains of fulminate). In a large number of experiments, with small amounts, I have found but very few cases when explosion did not occur. But in proportion as it is solidly frozen, that is, compacted together, the explosion is less sure, until, if the mass is very solid, firing becomes very uncertain.

Differences may be found in different dynamites. Some will fire more readily when frozen than others. This is perhaps due to differences in the sensitiveness of nitro-glycerine. (I have demonstrated that variations in sensitiveness of dynamites are noticeable by experiments made during the last year). But it is more probably principally caused by variations in mechanical condition. Thus one dynamite is drier than another, either from its containing a little less nitro-glycerine or because the absorbent is a little better. As dynamite is merely a mechanical mixture, slight variations of such kinds will naturally occur.

Evidently the drier dynamite will be less likely to become compacted and more likely to freeze loosely (pulverulent) than the moister, which will pack together while thawed and soft.

Also, it is plain that in large masses this agent will behave differently than in small. In a large case the weight of the mass will cause it to settle down, since the dynamite, when used (that is thawed), is soft and yielding and capable of being packed. (Thus, by driving in paper cartridges, it may be made to have a specific gravity of 1.5, while if simply filled in it will be no more than 0.9.) Then, if the dynamite becomes frozen, either it may freeze so solidly as not to be fired at all, or part of the charge may get into this condition while the remainder may be capable of explosion. (I have observed instances where part of a frozen charge would explode and part be scattered without firing, although it must be admitted that these were small amounts, in paper cartridges, fired in open air. Perhaps in a large mass this might not occur; but it is necessary to guard against such a chance.)

Previous to this winter, nearly all the experiments I have made with frozen dynamite were upon a small scale, say in quantities of one-half pound to two pounds, in paper or tin cases, and fired in the open air. The ordinary detonating fuses were used in most cases. Some curious results were noticed; but in the main the conclusions drawn in regard to the explosion of frozen dynamite are those which have been already given.

It seemed to be very desirable to try further experiments, and especially on a larger scale, and under the circumstances of practice. In larger quantities the probability of solid packing and freezing occurring is much increased, while, on the other hand, it is possible that on a large and more resisting mass the effect of the fuse may be different than in a small cartridge, which it can tear to pieces, scattering its contents.

During the past winter, all the experiments possible with the limited means at hand have been made, with the the results given below.

In these experiments the dynamite was always handled while thawed, and allowed to freeze in the case, usually in the water.

Charges of 40, 50, and 100 pounds were used in iron torpedo cases. These were heavy, difficult to handle, and had to be planted on the west side of the island, requiring more men to do the work than could always be had. So, to economize labor, and to continue the trials, tin cans, holding 5 to 7 pounds, were taken for preliminary experiments, to serve as guides for the larger ones. These were usually placed on the east side of the island.

The fuses employed in all these experiments were the ordinary detonating exploders, containing 15.20 grains of fulminating mercury. In some of the first trials it was found that exploders would not always resist (they were not intended to) long exposure at considerable depths, if the case leaked and filled with water, becoming dampened and useless. (It should be remarked that in many of these experiments the cases were intentionally not water-tight.) To avoid this difficulty, the exploders were protected by a coating of gutta-percha, being thus easily rendered impervious.

SMALL CASES.

No. 1. Six and a half pounds. Tin case. Ordinary detonating exploder. Case closed with cork, carrying exploder-wires, and not fitting tight. Placed in 18 feet of water February 8. February 16 tried to fire, without success. On weighing, found defect in connection.

No. 2. Same as No. 1, except that case contained 7 pounds. Placed and attempted firing at same time as No. 1. Failed to explode, and, on weighing, found exploder dampened and useless. In both these the dynamite found frozen hard.

No. 3. Seven pounds. Tin case. Fused as in Nos. 1 and 2. Twenty feet of water, February 19. Temperature of water 1° C. February 20 fired exploder without exploding dynamite. Found that the exploder had completely broken up in charge. Temperature of water 2° C.

No. 4. Same as No. 3, except that exploder protected by covering of gutta-percha. Same result as No. 3.

No. 5. Seven pounds. Tin case. Two exploders (protected) branched. Placed in 18 feet water February 26. March 1 both exploders fired in charge, bursting case and scattering dynamite, but without exploding the latter. Dynamite frozen hard.

No. 6. Same as No. 5, with same results.

No. 7. Five pounds. Tin case. Fused with one exploder, containing 40 grains of fulminating mercury. Placed March 10, and on March 12 tried to fire, but exploder was defective.

No. 8. Same as No. 7.

No. 9. Same charge as No. 7. Fused with one exploder, containing 50 grains of fulminate. Placed March 10. March 12 exploder fired, bursting open case, but without firing dynamite. Dynamite hard frozen.

No. 10. Same as No. 9.

No. 11. Repetition of No. 7. Placed March 19, and on the 20th fired, exploder bursting case open without firing dynamite.

No. 12. Same as No. 11.

LARGE CASES.

No. 1. Forty pounds dynamite. Old sheet-iron spar-torpedo, not water-tight. Two exploders (usual detonating) branched February 16, placed in 33 feet water. February 20 exploded torpedo with usual effect.

No. 2. Forty-five pounds dynamite. Otherwise same as in No. 1.

Placed in 21 feet water February 16. February 27 failed to fire. On weighing found that both exploders had fired completely. Dynamite hard frozen.

No. 3. Same as No. 1, with 49 pounds dynamite and exploders protected. Placed in water February 20. March 8 failed to explode charge, although exploders were fired.

No. 4. Same as No. 3, and with same result.

No. 5. Cast-iron spar-torpedo case, with 100 pounds dynamite. Two protected exploders branched. Allowed to freeze in open air after fusing and before planting. Placed in water March 12. March 24 failed to explode charge although exploders fired all right.

No. 6. Same as No. 5, but with one protected exploder, containing 50 grains of fulminate. Placed in water March 24. April 7 exploded with great effect.

No. 7. Cast-iron spar-torpedo case without spindle; 121 pounds dynamite. In center of charge, a tin can put, containing 12 ounces loose (spread out to freeze) frozen dynamite and one ordinary exploder. Placed in water March 29. April 7 exploded with great effect.

NOTE.—During the time which elapsed between the filling and firing of Nos. 6 and 7, the weather had become much milder, and it is therefore possible that, in these instances, the dynamite did not freeze as completely as in the others. It was therefore desirable to repeat them.

No. 8. Same as No. 6. After filling torpedo, placed in ice for 36 hours until frozen. Planted and tried at once. No explosion followed, and on examination it was found that the exploder had gone off all right, but without affecting dynamite.

No. 9. Same as No. 7, and treated in same manner as No. 8. Exploded with great effect.

We therefore conclude that an exploder containing fulminating mercury only will not fire frozen dynamite with any certainty. In these trials it did so twice, but in one instance (No. 6 of the large cases) it is doubtful if the charge was well frozen, and in regard to the other, it must be remarked that an exactly similar torpedo, which remained in the water a longer time (11 days instead of 4), was not fired; so it is possible that the same explanation may apply in this also.

In previous experiments on the small scale I have succeeded in exploding frozen dynamite much more often than in these trials.

To insure the explosion of frozen dynamite in torpedoes, some better means must be found than the ordinary exploders.

The most obvious way would be to arrange an exploding charge of loose dynamite (as in Nos. 7 and 9 of the large cases) to be fired by an ordinary exploder. I have rarely found that loose pulverulent dynamite would fail to be exploded in this way, although I have had a very few such occurrences. Probably there would be no difficulty in making this sure, however.

I also have had one instance (in winter of 1875-'76) when an initial charge of loose exploded without putting off the main body, but it was only ½ ounce in a cartridge of 16 ounces, while in these later experiments 12 ounces of loose were used in a charge of 100 pounds or more.

There would probably be little practical difficulty in arranging such an initial charge. The dynamite is easily got in the right state, and it only requires to be placed in a case strong enough to protect it from the mass of the charge. To insure that this fuse-dynamite should remain loose and pulverulent, it might be made a little less rich in nitro-glycerine than the rest, so that it would be drier and without tendency to pack.

However, further experiment must be made to *prove* that frozen dynam-

ite can be certainly fired in this way, and to indicate the best method of arranging torpedoes and exploders with this object in view.

In addition, it would be important to try other kinds of exploders, to see if some better means of firing could be obtained.

If dynamite is to be used in torpedoes, this matter must be worked out and a certain means of exploding it at all times found.

Besides the experiments which have been mentioned above, some trials of a method of measuring the force exerted by frozen and thawed dynamite comparatively were made. The preliminary experiments were successful, and the method seemed to promise well. Preparations were made to carry them on, but they have not been performed from lack of the pressure-gauges required.

During the present season I have to complete some series of experiments with various dynamites and on modes of firing this explosive in its usual condition.

The experiments with the frozen dynamite should be resumed next fall and winter. In order that this may be done, the dynamite must be prepared in advance. I would respectfully recommend that it should be made during the coming summer. As no work of this kind has been done here for nearly eighteen months, we have no materials on hand.

Very respectfully,

WALTER N. HILL,
Chemist.

Capt. K. R. REESE, U. S. N.,
Commanding United States Torpedo Station, Newport, R. I.

INSTRUCTIONS.

Keeping and use of dynamite—supplies, storage, &c.

1. Dynamite is supplied in wooden boxes holding 25 and 50 pounds. The boxes are carefully made, so as to be strong and tight. The covers are fastened on with brass screws, the joint being made tight by means of a thin rubber gasket. The boxes are painted a brownish-red.

2. Dynamite should be stored in a cool dry place.

3. When stored, the covers of the boxes containing dynamite should be slightly loosened by turning back the screws a few turns and springing up the covers, if necessary. The projection on the inside of the cover will sufficiently close the box without preventing some communication with the external air.

4. The boxes will be marked on one side in black, the marks indicating the contents, gross and net weights and numbers, and date. Each box has two numbers; the first is the lot number and the second the box number. The following is an example of the mode of marking:

DYNAMITE.
Weight, 62—50.
Lot 33, No. 44.
November 30, 1875.

The inside of the cover of each box will also be similarly marked. In making up records or statements, use *both numbers.*

5. With each lot of dynamite are supplied two boxes, containing tools and other articles necessary for use with it, and one lead-lined box. The box marked Dynamite, Supply No. 1, contains silica for use in case absorbent material is needed and materials for testing.

The box marked Dynamite, Supply No. 2, contains 1 copper scoop, 1 copper funnel, 2 wooden spatulas, and 2 wooden rods for handling the dynamite; 1 screw-driver, 1 paper small copper tacks, 1 roll paraffined paper, and 1 small copper hammer for repairing the lining of the boxes, if required. The box marked Dynamite No. 3 is the lead-lined box used for remixing the dynamite.

Possible changes; frequent examination.

6. Exudation (separation of liquid nitro glycerine) must be carefully guarded against. A tendency toward exudation is indicated by a change in appearance, the dynamite becoming moist and sticky instead of dry and pulverulent, and by a difference in dryness of the upper and lower portions of the mass.

Finally, if exudation occurs, oily drops of liquid nitro-glycerine will be found in the bottom of the box containing the dynamite. To prevent this taking place, the dynamite should be frequently examined, at least once a month, and in very warm climates once in two weeks. In examining to detect tendency toward exudation it should be noted, if the dynamite seems to have become much softer or stickier than at the last examination, if on stirring carefully the contents of the box with the wooden spatulas provided for the purpose the lower part seems to be moister than the upper, and, finally, if any liquid has actually separated. If any distinct difference in dryness is noticed between the upper and lower portions, the dynamite should be remixed with the wooden spatulas in the box containing it, or the box may be emptied into the lead-lined box, in which the operation may be more easily and thoroughly performed. If the dynamite merely seems to be a little softer or moister, nothing need be done with it; but if it becomes plainly wet or pasty, or if drops of liquid are found to have exuded, then it may be readily restored to its original condition by stirring it thoroughly with a small quantity of fresh absorbent (silica), which is supplied for this purpose. This must be done in the lead-lined box with the wooden spatulas. Pains must be taken to obtain a complete mixture of the fresh material with the old.

It is improbable that any trouble should be experienced from exudation; but if it should occur, it can be entirely overcome in the above manner without danger.

It should be borne in mind that dynamite is a mechanical mixture of liquid nitro-glycerine with a solid absorbent. Its freedom from a tendency to exudation depends upon the absorbing power of the absorbent used. Nitro-glycerine at comparatively high temperatures is much more fluid than at lower ones. Therefore, in order that separation should not take place at any time, there must be a sufficient excess of absorbent power. The dynamite supplied has such excess, but it will, of course, be slightly softer in a warm climate than in a cooler one. As long as it is dry enough to be handled, it is in a satisfactory state.

7. In examining, remixing, or otherwise handling dynamite, pains must be taken not to scatter it about. Boxes should be open and all work performed upon a piece of tarpaulin or canvas, which can be rolled

up and shaken afterward. Any dynamite scattered must be carefully swept up. All tools, boxes, &c., used in handling dynamite must be carefully wiped before being put away. Each time the lead-lined box is used, it must be nicely cleaned by wiping it out with cotton-waste or clean rags. All waste material (rags used in cleaning, &c.) should be thrown away.

8. Decomposition of the nitro-glycerine is not likely to occur. If it should take place, it may be recognized by a strong nitrous odor, due to the evolution of oxides of nitrogen and by the acid reaction of the dynamite. The nitrous odor is peculiar, and is the same as that observed when a metal is treated with nitric acid. Evolution of this gas may also be detected by the white test-paper furnished.

This paper contains potassium-iodide and starch and is turned blue by exposure to nitrous fumes. It must be well moistened before using. The dynamite may be tested for acidity by the blue litmus-paper furnished. Moisten the paper and lay some of the dynamite upon it, or place some of the dynamite in a test-tube and shake with a little water and dip the test-paper in the liquid. If acid is present the paper will be strongly reddened. If decomposition is going on it will show itself *markedly* by the above tests. The test-papers must be kept in their bottles and tightly stoppered. In the event of *active* decomposition being found to be going on, the dynamite should be used soon or thrown away. No instance has yet been noticed of this having occurred with dynamite properly made. Even an inferior article has been found to keep very well under ordinary circumstances.

Slight decomposition, if thought to occur, is of no consequence if the dynamite is not in great masses or too closely confined. As already stated, decomposition will show itself plainly enough, and therefore need not be apprehended without strong indications.

9. Examinations and observations upon the condition of dynamite must be carefully recorded and the record transmitted to the Bureau of Ordnance. The following form will be used in recording observations:

Date.	Nos.	Apparent condition.	Litmus-paper.	Starch-paper.	Remarks.
1875. Dec. 1	33, 34	Good	No effect.....	No effect.....	Turned out and remixed.

Transportation.

10. While carrying about, the covers of the boxes must be tightly closed to avoid leakage.

11. Dynamite should of course be handled with care, but it is not sensitive to blows or ordinary treatment, so that it may be handled freely without danger.

Use.

12. At temperatures of 40° Fahr. and below, the nitro-glycerine in dynamite freezes. In this condition firing becomes difficult, and the effect obtained is lessened. If the dynamite is frozen solidly it cannot be fired, but if it remains loose and pulverulent it may still be fired. It is therefore very desirable to use it unfrozen. If it should be frozen, it may be readily thawed by placing it in a metallic, earthen, or glass vessel, and putting this in hot water until the dynamite regains its normal condition.

13. In charging torpedoes with dynamite, use the scoop and funnel provided for the purpose, wiping them carefully before replacing them. The rods are for clearing the funnel when obstructed, and for packing the dynamite in the case. While filling, place the case on a piece of canvas, so that any scattered material may be collected. After the case is filled, wipe off the outside so that nothing may be left sticking to it. In charging, it will often be found convenient to empty the dynamite-box into the lead-lined box and charge from the latter.

14. Persons handling dynamite for the first time sometimes experience a severe headache of short duration. Susceptibility to this effect is soon lost with constant use. The headache when experienced is temporary, no permanent injury being produced.

15. Use but from one box at a time. If at any time the contents of different boxes are mixed together and the dynamite afterward returned again to the boxes, mark on each box the numbers of the boxes whose contents have been mixed together. This is necessary in order that it may be possible to trace each lot of dynamite from the time it was made until used or turned into store again.

16. Only the fuses specially supplied for the purpose must be used with dynamite. The simple powder-igniters will not fire it.

17. The force of dynamite may be considered as 6, gunpowder being taken as 1. The chief advantage of dynamite lies in the violent character (detonation) of its explosion.

18. The firing-point of dynamite is about 350° Fahr., while that of gunpowder is 600°.

19. Dynamite is not exploded by sparks or flames, but is merely set on fire, burning slowly away, leaving a white residue of silica; consequently, the ordinary precautions taken with gunpowder will be amply sufficient to prevent accident while handling dynamite.

UNITED STATES TORPEDO STATION,
Newport, R. I., November 16, 1877.

SIR: Owing to the limited appropriations and the absence of the tug Nina from the station from October to May, but little progress has been made in advancing the numerous contemplated experiments.

For the greater part of last year there could be employed only one carpenter, two machinists, one laborer (specialist) for chemical laboratory, one laborer (specialist) for electrical laboratory, one rigger and fireman at machine-shop, one painter and general shop hand, two laborers for general work, clearing away snow, &c., one teamster, four men for ferry launch, and one night-watchman.

During the presence of the class of officers under instruction this force was slightly increased, and the work of the station very much aided by the crew of the Nina.

With the force above described all torpedo-outfits for ships had to be prepared, and those returned from sea overhauled and made serviceable, when possible. The buildings, machinery, boats, &c., were cared for, and, when opportunity offered, such experiments were made as the limited force would admit, the reports of which, from the heads of departments and their assistants, will be found in their proper places.

The buildings are in good condition, the coat of oil and paint given to them has wonderfully improved their appearance, but does not effectually cover the wood, as was thought, and I would recommend that an additional coat of paint be given in the spring. This climate is particu-

larly hard upon wooden buildings, and those on the island need extra care owing to their exposed position.

A proper coal-bin has been completed for the coal under the Bureau of Equipment.

A temporary blacksmith-shop has been built of a capacity to do small job-work, thus saving the machine-shop from the smoke which has so long disfigured it.

The torpedoes and torpedo-fittings for boats, designed by Lieutenant Converse, are now being experimented with, with, no doubt, favorable results.

The spars for the Lightning have also been experimented with, and a full report will be made thereon.

The general condition of the boats is as reported last year.

I beg the bureau to urge the necessity of an appropriation for a sea-wall on the west side of the island. During the last eight months from two to three feet in width of the island has been washed away, and every gale of wind now makes its inroad.

Owing to the protracted illness of Professor Farmer, the electrician, the results of the year's work have been considerably delayed in preparation. His report will be read with great interest, and I hope to forward soon a supplementary report, which will bring up the record of experiments to date.

Professor Hill has not accomplished much beyond the needs of the station, owing to lack of force for the desired experimental work and want of means for outside purchase.

His report embraces the results of the past year, and is very valuable.

The service igniter and fuse has undergone some slight changes, full reports of which have been submitted to the bureau.

The ability and intelligence of the officers at the station are equal to the times, and it seems a pity that they cannot be made greater use of through lack of means.

A liberal crew allowed to the Nina would contribute much to the good of the service.

As the detailed estimates already submitted to the bureau embrace all that is desired at the station, I have only to allude to them to give work in contemplation.

Respectfully, your obedient servant,

K. R. BREESE,

Captain U. S. N., Inspector of Ordnance in charge of Station.

Commodore W. N. JEFFERS, U. S. N.,
Chief of Bureau of Ordnance,
U. S. Navy Department, Washington, D. C.

UNITED STATES TORPEDO STATION,
Newport, R. I., November 1, 1877.

SIR: In obedience to your order, I beg leave to submit the following report on torpedoes:

During the past year, owing to limited appropriations, and consequently small force employed, but few experiments have been made.

All of our naval vessels continue to be supplied with torpedo outfits from this station. A number of advantageous changes have been made in the outfit during the past year. These changes are due to the results of experiments here.

The present service torpedo seems objectionable for various reasons,

principally on account of its weight, lack of strength, and the great surface offered for resistance in being towed through the water, whether ahead or abeam. A new design has been perfected; these are of steel, and possess decided advantages over the present service pattern, being stronger, lighter, and offering less surface for resistance. Their general shape is very nearly that of a sphere. Owing to the late day of their completion, they have not had a thorough trial. Another feature they possess, an advantage over the service pattern, is the mode of attaching them to the spar or outrigger; the center of the torpedo-case lies in a prolongation of the axis of the spar, and is secured to it by a conical cap permanently attached to the torpedo-case, and also of steel, which is keyed to a metal cone rigidly secured to the end of the spar; this mode of attachment reduces the surface of the spar exposed to the effect of explosion, and the force is exerted in the direction of the length of the spar, the most advantageous for the spar and the boat.

Further trials have been had with the improved spar, experimented with by Lieut. R. B. Bradford, fitted with the attachments of spans to the forward guy and topping-lift, and it continues to give good results; tows well, preserves its immersion, vibrates but little, and has stood the fire of twelve service 100-pounder torpedoes without any material injury.

An ordinary ship's spar woolded with ratlin stuff for about one-quarter of its length from the outer end, which is also protected by a metal plate, the spar being supported by spans from the forward guy and topping-lift, has also been tried; it vibrates considerably with a speed of 8 knots (the speed of the vessel in which it has been tried), but the ability to withstand the effect of explosions has no doubt been increased.

The use of a compressor for the forward guy is an advantage, facilitating the handling of the spar after the explosion. Of the two patterns tried, the lever and eccentric is the best, being more sensitive and more readily handled.

Raising the heel of the spar, thus diminishing the immersed section and tendency of the spar to rise, and the securing the heel of the spar by a rope-lashing instead of the links and shackle now used, are advantages; the recoil of the spar being taken up by the more elastic material. A rope-lashing of six turns of 3½-inch manilla with two frapping-turns has withstood the fire of three 100-pounder service torpedoes and is not impaired.

A small iron davit, stepping at the rail convenient to the end of the spar, has been found to facilitate greatly the handling of torpedoes, and also the rigging out and in of the spar. This davit is out of the way, and when not required can be unshipped and stowed away; a similar davit, stepping in the bow of a launch, would greatly facilitate the handling of boat-torpedoes, doing away with the necessity of employing an auxilary boat for this purpose.

It has been found that, in the case of boat-spars, if the spar is left free to recoil, the effect upon the boat and spar is reduced; the spar recoils usually from 10 to 15 feet, but not past the balancing point, therefore not coming into the boat. A ready man at the heel-rope can easily, at this time, rig the spar in by a pull on the heel-rope, leaving the launch free to steam without the drag of the spar. Spars have been very successfully worked in this way at the station, and a number of spars have each withstood the explosions of six service boat-torpedoes without material injury. By this precaution the life-time of the spar is prolonged.

With dynamite the action is so different, that in experimenting with charges varying from 20 to 25 pounds, the spar has recoiled violently

beyond the balancing point, landing in the boat; and in one instance was thrown over the boat into the water astern. In all cases the spar has been broken, a piece of from 5 to 6 feet in length being broken short off from the outer end.

Trials have been had with improved boat-fittings suggested by Lieut. G. A Converse, United States Navy; these fittings are designed for the use of the same spar either ahead or abeam, and the experiments thus far have given satisfactory results. With these fittings have been tried the steel torpedoes mentioned, also the design of this officer.

Experiments have also been made with the fittings designed for fast torpedo-launches, with a view to determine the requisite strengh for a beam-spar, with good results.

A towing-torpedo capable of being towed on either quarter, or shifted from one quarter to the other while being towed, has been designed by Lieutenant Converse, and the trials had with a little working model give promise of success with a larger and more practicable one.

During the summer Captain Ericsson sent here for trial and experiment a movable torpedo propelled and controlled by compressed air; this possesses advantages of construction over the one of his design the property of the government. After a few trials conducted by the agent of the inventor, in the presence of an officer attached to the station, it was transferred to New York, where further trials have been made.

The Lay movable torpedo No. 2 was received at the station during the summer, but no experiments or trials have taken place.

There has been in course of construction here, after plans and designs furnished by the inventor, Commander J. A. Howell, United States Navy, a movable torpedo, which is rapidly approaching completion, and when finished trials will be instituted.

During the past season there has been in constant use on board the tug Nina a voltaic battery of the Converse modification of the Le Clanché type, for firing and signal purposes; it has been found to answer all requirements.

Very respectfully, your obedient servant,

J. S. NEWELL,
Lieut. and Assistant Inspector Ordnance.

Capt. K. R. BREESE, U. S. N.,
Inspector of Ordnance, in charge of Station.

TORPEDO STATION,
Newport, R. I., October 31, 1877.

SIR: In pursuance of your instructions, I respectfully submit the following report upon the work of the chemical department of the torpedo station for the last year.

Our work has been very much restricted by the lack of means, so that much which I hoped to have accomplished remains undone.

In my work, I have greatly felt the need of help. Until July 1, 1876, I have had one or more assistants, but since then I have been without such aid. This want of help has been especially injurious as hindering and preventing experimental work. The routine and regular work of the department is pressing and constant, while in many directions experimental work of great value and importance remains unperformed from lack of assistance. With all there is to be done, I find almost no opportunity for experiment and work in advance. Progress is almost impossible under circumstances so cramped and limited as those of the past year.

I would earnestly press this matter upon your attention, and recommend that an assistant be again placed in this department. In past years I have been ably assisted by officers who have been attached to the station, but for some time I have not had this advantage. It would greatly help me in my work if, of those who come to the station for instructions, some could be retained for this duty who show an aptitude for experimental work.

The general and routine work of this department has been performed as usual the past year. This includes the care and handling of the violent explosives used and the general chemical work, such as testing paints, oils, glycerines, and other articles, analyzing mixed acid, preparing battery-solutions, reagents, &c. I would particularly note that there is much need of some larger balances than any in the laboratory.

The experimental manufacture and use of explosives constitute the larger part of the work of this department, outside of the instruction. As has been said (Report of November 25, 1876), our work of this kind is with the violent explosives, relating mostly to nitro-glycerine and its preparations. As far as our means have permitted, this work has been continued.

NITRO GLYCERINE.

The method and apparatus in use at the station are fully described in the bureau publication, Notes on Explosives, and in the report of November 25, 1876, which has been referred to (Report of Secretary Navy, 1876). No essential changes have been made in them, as their working has been entirely satisfactory. In 1875, 1,600 pounds of nitro glycerine were made here; this was employed in making dynamite, which has been used as needed for various experimental work. During the months of July, August, September and October of this year (1877), 1,350 pounds of nitro-glycerine have been made, and turned into dynamite; this represents a great deal of work, as all the nitric acid required has been distilled at the station; this amount will be brought up to nearly 2,000 pounds during next month.

I would direct your attention to the condition of the buildings where work of this kind is performed; they are only a lot of old sheds, not provided with proper facilities for keeping or handling the materials used, or the nitro-glycerine and other products made here. Some improvements at least are urgently required.

The method of distilling the nitric acid employed is but tolerably satisfactory, and should be replaced by a better. Its defects are remedied as far as possible, by care in determining the *actual* composition of the mixed acid before using it. It would be better to take means for distilling a more uniform acid.

KEEPING NITRO-GLYCERINE.

I have continued to keep in magazine specimens of the nitro-glycerine made from time to time, and there are now here about 60 such specimens, running back to June, 1872. These have remained seemingly unaltered for the times they have been kept, as they show no signs of formation of free acid, or of other decomposition. It is my intention at the first opportunity to make a series of experiments on these specimens, to note if any differences in sensitiveness can be observed.

EXPERIMENTAL WORK WITH NITRO-GLYCERINE.

In my report dated November 25, 1876, I alluded to an investigation I had projected and begun upon nitro-glycerine and the reaction by

which it is produced. I then expressed the hope that I should be able to carry forward this study during the year following. I regret to say that I have been unable to do this from the pressure of my duties, which has prevented me, alone as I have been, from devoting time and thought to such study. Yet this is a matter of great importance and one which ought to be fully worked out.

Although it has been shown that probably there are three nitro-glycerines or nitrins (Secretary of the Navy's report 1876, p. 168), yet I am not aware that this has been directly proved, and especially the reaction by which nitro-glycerine is formed has not been studied with a view to determine whether more than one of these nitrins may be formed in it, and if so, to point out the conditions governing the formation of these different compounds. The interest and importance of such a study, both from practical and scientific points of view, are obvious, and it is to be hoped that opportunity and encouragement will be given to its prosecution.

DYNAMITE.

All the nitro-glycerine made thus far in 1877 has been turned into dynamite; about 1,800 pounds of the latter having been prepared. This dynamite contains 75 per cent. of nitro-glycerine, but is dry enough for convenient handling. None of our dynamite has shown any tendency to lose its nitro-glycerine on keeping, under the conditions met with at the station. In all respects it is satisfactory as far as our experience goes. But I would again remark that we lack knowledge of it under more trying circumstances, and again urge the importance of testing its behavior at sea and in hot climates.

In the station-magazine dynamite is kept in wooden boxes holding 25 and 50 pounds. These boxes are specially made for this purpose and are suitable for transporting the explosive if necessary. Instructions for the care and use of dynamite have been drawn up, a copy of which accompanies this report.

Experimenting with dynamite has been greatly limited by the lack of means.

A number of experiments have been made on the firing of frozen dynamite. These are detailed in my report dated April 30, 1877, a copy of which is appended and to which I would refer. It is very desirable that these experiments should be continued, as they are yet incomplete. Since the experiments just spoken of were made I have had a case in which frozen dynamite was not fired, although the conditions were like those in other cases when explosion occurred. The subject is evidently of great importance, since in our Northern waters dynamite will often be frozen and remain so for considerable periods. As I have remarked at another time, it is highly probable that differences in readiness of firing when frozen may be found in dynamites made at different times, so that it is necessary to obtain some certain means of explosion. I intend to continue these trials this winter and hope to finish them.

In this connection I would again bring up the subject of experiment on the comparative force of explosive agents. The very interesting experiments begun in 1874 have not been continued. They promised to yield valuable results, but we have been unable to go on with them from the want of means.

Some preliminary trials have been made of another method of comparing the force of explosive bodies, which were very satisfactory, and it is designed to prosecute the work when possible. I would recommend that the facilities required for this should be afforded.

A series of experiments to determine the distance at which dynamite will be exploded by concussion from firing another charge in air and water has been planned.

GUN-COTTON.

A quantity of English-compressed gun-cotton is at the station, but as yet little has been done with it. It is desirable that this material should be experimented with, and in comparison with dynamite. It will be necessary to make a suitable fuse for it.

PICRIC POWDER.

In my report of November 25, 1876, I summarized the experiments which had been made with picric powder, and stated that it was proposed to continue them by trying powders of varying composition. For this purpose a quantity of ammonium picrate had been prepared in the station laboratory. Since then nothing has been done in this direction. I would earnestly recommend that the subject be taken up again, and that the experiments in connection with it be performed. The plan proposed is stated in my report dated August 21, 1875.

If this picric powder is found to possess the properties claimed for it, it will be very serviceable as a shell and torpedo powder.

LIQUID CARBONIC ACID.

The method in use at the station for preparing this substance in large quantity and the construction of vessels to contain it are described in my report of November 25, 1876 (Report of Secretary of the Navy, 1876, p. 174). In this report the statement is made that a vessel built upon the plan there described is not likely to burst explosively, but if strained beyond its endurance it will gradually yield until an opening is made and the pressure relieved. This opinion has now been confirmed in practice. Two flasks were charged with the liquefied gas in December, 1876, and remained until August, 1877. One was then emptied, as it was necessary to remove its valve. The other was kept charged until on August 17, 1877, it was found that gas was escaping from it. Examination showed that a partial separation had occurred at the junction of one of the heads with the body, causing a large leak. The weakness of the vessel being thus indicated, its valve was opened and the gas remaining in it discharged. The probable cause of this yielding is that this flask was weakened by being exposed to excessive and long-continued strains applied to test a mode of securing the valve pieces. The flask has been since perfectly repaired.

I would again call attention to the opportunity for important and interesting experiment in connection with liquid carbonic acid. We are able to make easily large quantities of this substance, and can therefore operate on a large scale. Some time since (July 5, 1875) I submitted a plan for making an elaborate series of observations of the tension of its vapor at different temperatures and its behavior under varied conditions. Other investigations have been suggested. I earnestly recommend that the means be granted for prosecuting such studies.

INSTRUCTION.

As heretofore, the instruction of the officers ordered to the station for that purpose has made up a large part of the duty performed. The usual course occupies three months, but this year a portion of the class

arrived June 1, the remainder coming July 1, so that instruction was carried on during four months.

The system followed in this department has been essentially the same as in 1876; lectures on general chemistry and on the chemistry of explosives, appropriately illustrated and accompanied by practical work and experiment. As before, the officers under instruction were required to answer regularly, in writing, questions covering the subjects of the lectures.

I have already submitted to you a list of the topics treated in both courses of the lectures.

Some additions are required to the apparatus and other means of illustration and experiment in connection with instruction.

Unaided as I have been this last summer, I have not been able to make the course of instruction as full and satisfactory as I wished. I have not had time to elaborate the lectures themselves or to prepare experimental work, as I wished to do; but if the plan of instruction which has been adopted for two years is still adhered to, I shall aim to improve and complete that portion which is assigned to me. I think that experience has shown that this method is the best one applicable.

Very respectfully,

WALTER N. HILL,
Chemist.

Capt. K. R. BREESE, U. S. N.,
Commanding Torpedo Station.

UNITED STATES TORPEDO STATION,
Newport, R. I., October 25, 1877.

SIR: The course of instruction during the present year has been substantially as it was in 1876. The attention, diligence, and progress made by the students has been very commendable.

Besides the instruction given to the class, the officers of the station have continued the investigations which were commenced last year, having for their object to determine the relative value of different magneto-electric machines for the production of electric light.

Owing to my protracted illness, these experiments have not been concluded nor their results fully determined. It is to be hoped that during the coming winter this end may be accomplished.

The machines that have been under examination are the large and small Gramme, the Wilde, the Heffner-Altenek as built by Siemens Bros., and the Farmer dynamo as built by the Messrs. Wallace and Sons.

Experiments have also been conducted with the Serrin lamp which accompanies the Gramme machine, with the non-automatic lamp furnished by Mr. Wilde, with the automatic lamp furnished by Siemens Bros., with an automatic lamp built by the Messrs. Wallace and Sons, with two automatic lamps built by Mr. Farmer, and also by one new automatic lamp of his construction which was furnished for use on the torpedo-boat Lightning, to be operated by the small Gramme machine.

One of the objects sought to be attained was to determine the relative efficiency of these various machines, *i. e.*, to determine what fraction of the mechanical power applied was converted into current electricity.

By reference to the text-books of Jenkins and Maxwell on electricity,

it will be seen that the dimensions of an electro-magnetic resistance are the same as those of a velocity, viz, $\frac{L}{T}$ = a length divided by a time. So a strength of current may be expressed as the square root of a force or $S = \sqrt{F}$, or as the square root of the product of a length and a mass; and this product divided by a time, then $S = \sqrt{F} = \frac{\sqrt{LM}}{T}$. So too an electro motive force, since it is the product of a resistance multiplied by a strength of current, will be expressed thus: $E = RS = V\sqrt{F}$ or an electro motive force is of the same dimensions as a velocity multiplied by the square root of a force, or in units of length, mass, and time, $E = \frac{L^{\frac{3}{2}} M^{\frac{1}{2}}}{T^2}$; and finally electric power or $ES = RS^2$ will be of the same dimensions as mechanical power or $V\sqrt{F}\sqrt{F} = VF$ equal to a velocity multiplied by a force or $= \frac{L^2 M}{T^3} = \frac{V^2 M}{T}$ square length multiplied by a mass and divided by the cube of a time.

With these preliminaries we shall see that a volt multiplied by a weber (farad per second) will equal nearly 44¼ foot-pounds per minute.

Expressing the absolute units in meters, grams, and seconds, and the more familiar mechanical units in foot-pounds, and minutes, we have.

$$p = \frac{12}{9.81} \times \frac{(10^5)^2}{10^7} \times \frac{15\,432}{1000} \times \frac{3.2809}{1} \times \frac{60}{1} = 44.24,$$

or multiply volt-webers by 44.214 to get their equivalent in foot-pounds per minute, or by $\frac{44.24}{3300} = .00134$ to get an equivalent in horse-powers.

With this understanding, in order to determine the efficiency of any magneto-electric machine we measure the resistance of the circuit in which it is acting; observe the strength of current produced by the machine, and note also the H. P. applied to drive it. Its efficiency is then $\frac{.00134\, R\, S^2}{\text{H. P.}}$.

By the inverse method it would be easy to ascertain the efficiency of any form of electro-magnetic engine by noting the strength of current active in driving it—measuring the resistance of the whole circuit, and also the mechanical power evolved by the combination O, the efficiency, expressed thus:

$$O = \frac{\text{H. P.}}{.00134\, R\, S^2} \text{ or } \frac{745.93\ \text{H. P.}}{R.\ S^2}.$$

We will first examine the large Gramme machine. This machine weighs about 2,700 pounds, stands 30 inches high, is 40 inches long, and 34 inches wide; it is driven by a pulley 15 inches in diameter. The mechanical execution of this machine is excellent. The armature moves with very little friction, about 19 foot-pounds per revolution. The field of force-coils are flat. There are four of these, each about 10 inches long, 3¾ inches deep, and 22 inches wide. The wire is of such size as to pack about 6 spires per linear inch. The armature resistance is .129

ohms, the field resistance .212, thus making .341, little more than $\frac{1}{3}$ of an ohm for the total internal resistance of this machine. The armature is wound with a flat wire nearly 17,000 inches in length, disposed in 828 spires, and weighing 126 pounds. The field of force-coils aggregate a length of 19,000 inches, disposed in four multiple arc circuits of 472 spires each, or 1,888 in all, and weighs 357 pounds, making the total weight of wire in the machine 483 pounds. Here the weight of wire is equal to nearly $\frac{18}{100}$ (p. c.) of the total weight of the machine. There is but one commutator, consisting of 134 divisions, upon which press two wire brushes or collectors.

I will digress a moment to describe the dynamometer used. It is known as Neer's dynamometer, and consists of a shaft with one fast and one loose pulley and a movable cross-head; a pair of rollers are attached to one pulley and a pair of inclines to the cross-head, a spiral spring encircles the shaft, and the reaction between the driving and driven belts causes the rollers to mount the inclined planes and thus compress the spring; one end of this spring is attached to a pointer protruding from the shaft, on this pointer is a scale divided into thirty-seconds of an inch. The diameter of the pulleys is $16\frac{1}{2}$ inches; a strain on the driving belt of 4.966 will compress the spring $\frac{1}{32}$ of an inch; as a mean of many experiments there to get the H. P., we multiply the number of revolutions per minute of the dynamometer shaft by the number of 32d expressed on the scale, and finally multiply this product by .00065, and we have the horse-power at any moment; thus, H. P. $= .00065\ p\ V_n$.

I here subjoin a table of experiments.

Column 1 contains the velocity of the dynamometer.

Column 2 that of the machine.

Column 3 the pressure on the dynamometer spring in 32d of an inch protrusion.

Column 4 the deflection of the galvanometer θ_2'.

Column 6 the resistance of the galvanometer circuit, which is used as a shunt to a small resistance which is in that part of the circuit in which the machine is placed.

Column 5 is the more exact value of this small resistance. These two resistances were measured at the close of each experiment.

Column 7 is the sum of all the resistances in the circuit.

Column 8 is the strength of current developed in the circuit and is $S = \frac{R_g + R_s}{R_s} \times a \times \tan \theta_2' (a = .015)$.

Column 9 is the electro-motive force or the product of the numbers in column 7 by those in column 8.

Column 10 is the product of columns 8 and 9 multiplied by the factor .00134, and expresses the developed electric energy in horse-power.

Column 11 is the product of the numbers of column 1 and column 3 multiplied by the factor .00065, and expresses the horse-power actually applied to drive the machine.

Column 12 is column 10 divided by column 11.

Column 13 is column 9 divided by column 2, and shows the electromotive force in function of the velocity. This is some (as yet unknown) function of the total resistance in the circuit.

From an examination of this table, I infer that, within these limits, the electrical force averages $108\frac{1}{2}$ volts per 1,000 revolutions per minute of the armature, provided the total resistance in circuit does not differ greatly from $1\frac{1}{4}$ ohms.

From column 12, I infer that the efficiency of the machine may be

safely set down as 68 per cent., although it seems to vary between 60 and 75.

	1	2	3	4	5	6	7	8	9	10	11	12	13
	V_d	V_m	p	θ'_2	R_s	R_g	R	S	E	JES	P	$\frac{Jes}{P}$	$\frac{E}{V_m}$
				° ′									
1	318	360	8.	41. 50	.105	185.	1.642	23.67	38.86	1.232	1.658	.739	.108
2	314	378	8.25	41.59	.105	195.	1.662	25.08	41.68	1.045	1.684	.620	.110
3	348	389	10.1	41.59	.107	235.	1.477	29.54	43.63	1.792	2.284	.756	.112
4	347	387	12.3	41.56	.114	283.	1.282	33.46	42.89	1.923	2.774	.693	.111
5	338	362	14.2	42.00	.128	333.	1.069	35.15	37.57	1.769	3.119	.567	.103
6	327	357	17.	42.07	.127	409.	.879	43.68	38.39	2.247	3.613	.621	.107
7	336	352	21.5	41.49	.125	549.	.675	58.94	39.78	3.142	4.551	.689	.113
8	346	386	7.5	.....	.200	329.	1.737	29.22	38.59	1.283	1.686	.682	.100
9	322	367	10.3	.....	.201	439.	1.357	29.24	39.68	1.555	2.156	.721	.108
10	343	373	13.5	.....	.220	559.	1.167	34.53	40.29	1.864	3.009	.619	.108
11	336	380	13.5	.....	.220	559.	1.167	34.53	40.29	1.864	2.946	.632	.106
12	322	366	20.1	.....	.210	859.	.762	58.64	42.46	3.166	4.207	.752	.116
Average	.....	.....	.....	.....	.....	.....	.....	.....	.....	.....	.....	.681	.1085

The small Gramme machine stands about 18 inches high, 20 inches in length, and 13 inches in width. There are two commutators of 50 divisions each. The wire in each armature weighs 9 pounds, disposed in two distinct circuits; one has an internal resistance of .306, the other .335 ohm; aggregate, .641 ohm. The field of force has force-coils of an aggregate weight of 34 pounds, and an aggregate resistance of 1,317 ohms, so the total internal resistance of the machine is .641 + 1.317 = 1.958, nearly 2 ohms, and at a velocity of 1,800 turns per minute it yields from 300 to 400 c. l. I have not yet measured the power required to drive it. It is probably between one-half and one horse-power.

Thirdly, the Wilde machine: this resembles in some measure the Hyerth machine of 1855, only that its field is wholly electro-magnetic, no permanent magnets being used in its construction. Its armature wire weighs 28 pounds, and is divided into two circuits, about 7 pounds of it, having resistance of .454 ohms and connected to a commutator, furnishes a current and serves to maintain the field. The remainder of the wire, 21 pounds, offering a resistance = .074 ohm has no commutator, but is connected to two bands upon which press two springs or collectors, the springs serve as conductors to deliver a to-and-fro current to the lamp.

About 325 pounds of wire are distributed into 24 coils to make up the electro-magnetic field, which has $R_s = 2.83$; these coils are $10\frac{1}{4}$ in length and $3\frac{7}{8}$ external diameter, having soft round iron cores 2 inches diameter. There are 24 armature cores and coils, one-half on each side of a central cast-iron wheel $1\frac{1}{2}$ inches thick. The central diameter of this wheel is 18 inches nearly. The total resistance of this field of force, as arranged, is 2.83 ohms. Thus the whole weight of wire used in this machine is not far from 354 pounds. When carefully adjusted and running at a speed of 600 revolutions per minute, with good carbons, it has given as much as 3,000 c. l.

The interaction of the armature circuits is such that when the light circuit is closed with external resistance less than $\frac{1}{10}$ ohm, less power is required to drive the machine than when the light circuit is open, as will be seen from the subsequent experiments.

The following is a list of experiments tried October 10:

V_D	V_m	p	S	P	
342	533	12.5	5.14	2.778	Carbons in contact.
370	510	15.5	5.28	3.727	Short arc.
345	467	19.5	6,13	4.246	No arc.
355	514	16.2	5.28	3.738	Short arc.
317	447	24.0	6.21	4.940	R = 1.97.
335	483	19.2	.....	4.180	No arc.
340	496	19.5	.....	4.310	No arc.

On October 14 the pulleys were so changed as to give the machine a greater velocity relatively to the dynamometer. A single experiment gave

V_D	V_m	p	P
447	650	13	3.77

On the 16th October, experiments were tried to ascertain what would be the power required to drive the machine when the field was maintained by a current not from itself, but from another machine. This new current was maintained constantly at 6 webers strength, being a little more than the average field-current furnished by the machine itself in the experiments of October 10.

Four experiments were made in the day-time, October 16, as follows:

V_D	V_m	p	S	P	
450	620	16.75	6	4.89	No arc.
450	640	16.5	6	4.82	Short arc.
487	685	11.7	6	3.70	Carbons in contact.
454	625	17.8	6	5.25	R = 1.97.

The total resistance of the field being R = 2.83 the theoretical energy expended on the field by a current of 6 webers strength, would be $44.25 \times 2.83 \times 6^2 = 4508$ foot-pounds per minute = .136 H. P.

But we find that when there was no arc, both armature circuits being open, it requires 4.89 H. P. to maintain a speed of 620 revolutions per minute. This consumption of forces is due to the work done on the iron cores of the armature by the "Ampère" currents set up in them by their alternate magnetization and demagnetization at the rate of $620 \times 12 = 7440$ times per minute. This is soon noticed by the rise of temperature in the armature after it has been a little while at work. In the evening of the 16th three other experiments were tried. In the first two the field was maintained by this same extraneous current as in the day-time, but in the third experiment it was maintained by its own appropriate armature circuit. The results are given below:

V_D	V_m	p	S	P	
466	680	12.5	6	3.78	L = 576.
440	641	13.8	6	3.87	No arc.
470	632	13.4	.....	4.09	L = 576 to 600.

From the first one of these experiments it appears that it actually took less power to drive the machine when giving 576 c. l. than in the second experiment when doing no external work. In the third experiment the current was not observed, but it could not be far from 6 webers—possibly a little greater.

Further experiments are contemplated in order to determine the net power converted into light abstraction being made of the power required to supply the magnetic field.

Fourthly, the Heffner-Altenek machine, as built by the Siemens Bros.: this machine is 61 inches in length, 28 inches in breadth, and 12 inches in height. It is of that class in which there are no moving masses of iron subject to magnetization and demagnetization. Its field of force is furnished by two groups of 16 bars each, of wrought iron, slightly curved in the middle portion so as partially to surround the armature. Each of these bars is 1 inch in thickness and 2 inches in breadth and 28 inches in length. These two groups are connected at each end, the one to the other, by slabs of cast iron 84 inches in length on outside of the machine. The curvature of these bars is such as to surround and be nearly in contact with perhaps two-thirds of the periphery of the armature; each end of each group of field of force-bars is surmounted with a spool of insulated wire. This wire is .115 inch diameter, and the amount on each of the four spools is nearly 95 pounds. The four spools are connected in multiple arc, and their conjoint resistance is nearly .48 ohms.

The armature is something over 34 inches in length, and 9½ inches external diameter; it is formed by winding 98 pounds of two insulated wires of .119 diameter longitudinally and in eight divisions around a thin and hollow brass cylinder. Within this hollow cylinder is a hollow stationary cylinder of cast iron supported by bearings that pass through the above-mentioned brass cylinder, and of course the bearings on which the brass cylinder turns must likewise be hollow. The commutator has 8 divisions, which are 8 sector-shaped sheets of brass insulated from, but attached to, the face of a plate which is outside of one of the bearings of the brass cylinder.

Two collector-springs or brushes trail upon and press against these sectors; these brushes have a bearing so extensive as to short circuit or bridge over the edge of two sectors, while changing from one to the other, and thus practically preserve the continuity of the circuit. The spark at the commutator is quite insignificant considering the great strength of current (often more than 50 webers) and fewness of divisions to the commutator.

It will be seen from this description that this machine differs from all the others above mentioned in this point, viz: The armature simply moves a wire through a field of force which is produced by the wrought-iron bar magnets of the field excited by the field of force-coils. The intensity of this field is heightened, too, by the induction of the central and stationary cylinder of iron, this being magnetized by the induction of the field of force-bars.

There being no iron in this machine to be alternately magnetical and demagnetical during the armature's rotation, and consequently no energy uselessly expended in that process, we should expect this machine to give the highest duty of any of these here enumerated, and such we find to be the case, as will be seen from Table No. 2, Siemens, July 17, 1877, where it appears to average .729 for its efficiency, while the mean of 12 results on the Gramme was only .681. With the Siemens machine making 350 to 400 revolutions, the light given out would vary from 4,500 to 5,000 c. l.

TABLE No. 2.

V_D	V_m	p	θ'_2	R	R_g	S	ER	RS^2	JES	P	$\frac{JES}{P}$
			° ′								
300	287	18.5	41.40	.21	623	39.47	1.345	2047.6	2.744	3.607	.761
328	314	21.0	42.29	.21	623	40.65	1.366	2257.1	3.024	4.477	.675
320	297	19.5	42.45	.21	623	40.95	1.360	2280.5	3.055	4.055	.753
Average											.729

An interesting experiment was tried to enable me to form some approximate estimate of the net power expended on the armature circuit while producing a light. To this end a current of from 25 to 33 webers was passed through the Siemens field, such current being furnished by the Gramme machine, while the current furnished by the Siemens armature embraced only the leading wires and the lamp external to itself. This being the arrangement, the Siemens armature making some 380 revolutions per minute, the light given out varied between 6,241 and 8,177 c. l., according as the velocity changed and the arc varied in length. The power expended on the armature varied from 5.05 to 5.37 H. P.

But by a previous experiment I find that 3.07 H. P. was expended in driving the armature 462 revolutions per minute, even where the arc was broken and there was no light. This was owing to the adjust- and construction of the armature commutator and brushes; had there been more division to the commutator and armature and a better adjustment of the commutator, there would have been less loss.

This difference, 5.37 — 3.07 = 2.3, or 2.3 H. P., was actually consumed in producing at times 8,100 c. l., or more than 3,500 c. l. per H. P., as the amount that could be produced from a similar armature revolving in a field of equal strength and produced by permanent steel magnets. This would correspond to, say, 9½ foot-pounds per minute as the net cost in energy of one c. l. Elaborate experiments made on the combustion of gas, by Prof. Jules Thompson, of Copenhagen, some years since, led him to the conclusion that 1 c. l. represented nearly 13 foot-pounds of energy per minute; so two certain experiments by Prof. W. B. Rogers with an electric light of 13,000 candles produced from 500 powerful Bunsen cells enabled me to reach the conclusion that 1 c. l. was the equivalent of from 12 to 13 foot-pounds per minute.

Unless especial care be taken in preparing and using the carbon points, great variation in the intensity of the light will occur.

When the current of the Siemens armature was passed through its own field, the total internal resistance being then .58 ohm, and the remaining resistance being only that of the arc, and probably $\frac{1}{20}$ ohm for leading wires at 375 revolutions and 31 divisions pressure on the dynamometer, and the armature making 348 revolutions, the power consumed was 7.55 H. P., and the light ranged in the vicinity of 5,000 c. l., sometimes exceeding and sometimes falling short of that amount.

The size of wire on this machine is such that it will bear to be driven from 400 to 500 revolutions per minute, and it can be made to give a light exceeding 12,000 candles.

I come next to the machines built by Messrs. Wallace & Sons, one of which was sent to this station at the request of the Bureau of Navigation for the purpose of having its suitability for electric-light signaling examined into. A description of this machine will be found in the report of experiments made with a view of determining its relative efficiency. From an inspection of Table No. 3, here subjoined, it would

appear that as the result of three experiments its efficiency in converting mechanical into electrical power may be set down at 50 per cent.

TABLE No. 3.

V_D	V_m	p	θ^1_2	R_s	R_g	ER	S	E	ES	JES	P	$\frac{JES}{P}$
			° ′									
342	758	20.25	41.21	.219	204	10.404	12.31	130.65	1601.	2145	4.56	.47
347	765	18.25	41.39	.206	200	8.764	12.96	126.54	1640.	2197	4.116	.53
345	747	19.	41.37	.206	194	9.884	12.53	124.65	1557.	2086	4.26	.49
Average												.50

Comparing now the efficiency of the three types of machines, viz, the Siemens, the Gramme, and the one built by the Messrs. Wallace & Sons, they will be found to range themselves as follows:

Machines.	Efficiency.
Siemens	.729
Gramme	.681
Wallace	.500

A few words may be said in reference to the various lamps experimented with.

First, the Siemens lamp. This is automatic in its action. An electro-magnet in its base, with circuit-shutting arrangement causes an armature to vibrate when the current is too strong, and this by means of a ratchet and wheel-work separates the carbons to such a distance as shall give a suitable arc. The weight of the upper carbon and holder causes the carbons to tend to approach each other, but, as they move together, the arc is shortened, the current is increased, and the vibrating armature again separates the two carbons. When properly adjusted and supplied with a current of 40 or 50 webers strength, the performance of this lamp is admirable. The lamp is so constructed that by simply turning a button it can be adapted to a to-and-fro current, but turning the button in the opposite direction adapts it to a current of one direction only. This lamp works best with the latter arrangement.

The Serrin lamp is an admirable one, works smoothly and uniformly, and gives a very steady light. So, too, does the Farmer lamp, that was used for signaling in some experiments made for Commodore F. A. Parker last autumn. This lamp seems best adapted for signaling purposes of any of those that have been tried at this station. It has been run for three hours or more without once going out. A shutter arrangement was fitted last year to this lamp, which proved very effective for signaling either by a succession of flashes or by a succession of obscurations. The succession of flashes is much to be preferred according to the experience at this station.

A small non-automatic hand-lamp constructed by Mr. Farmer, for use on the torpedo-boat Lightning, has proved very advantageous as a means of signaling when its beams have been waved in the sky in a manner somewhat similar to the usual method of waving a signal-flag. In dark and cloudy nights this method of signaling has some advantages, since the position of the lamp can be screened, as for instance by being sunk in a rifle-pit, so that its exact location could not be determined at a distance. The non-automatic lamp of Mr. Wilde is a good one for such a method of signaling.

The automatic lamp made by the Messrs. Wallace & Sons has not given so good satisfaction for signal purposes as was hoped, principally because of the intermittent character of the light. The feeding mechanism for the carbons is such that it allows the carbons to burn away until the arc becomes quite long, then, the current having become much weakened, the carbons rush suddenly together, nearly putting out the light, which, however, soon regains its former brilliancy. But this wide variation in the intensity of the light is prejudicial to its use as a means of signaling. With proper care bestowed on its adjustment it has given fair results for the purpose of general illumination, saving the unpleasant variation in the intensity of the light.

The carbons furnished by the Messrs. Wallace & Sons are very excellent; none better or even so good, from any other source, have been brought to our notice.

Some experiments have been tried with parallel carbons arranged somewhat after the plan of the carbons in the electric candle of M. Zablochkoff, but sufficient experiments have not yet been tried to warrant an expression of opinion as to the serviceableness of carbons used in that manner.

Experiments have been continued with the platinum lights, but no newer results are ready for publication.

Lieutenant McLean tried some interesting experiments in the endeavor to diffuse the electric light by rotating the lamp rapidly about a center eccentric to the light, suggested no doubt by the well-known experiment of whirling a lighted torch in the air. The experiments were not carried sufficiently far to develop any useful results.

A novel and useful method of diffusing the electric light and removing the painful glare usually present with a powerful arc has been adopted for the illumination of the workshop. It is as follows: A cylindrical screen, formed by stretching a few yards of cloth around an upper and under hoop of iron wire, which hoops should be from three to five feet in diameter, is placed around the electric lamp, the top hoop being, say, one and a half or two feet above the level of the carbon points of the lamp, and the lower hoop of the screen being as much below the lamp. This screen serves to soften and nearly obliterate the sharpness of the shadows usually experienced with the light from a powerful electric arc. With one such source of illumination, and still better with two lamps, it is found practical for machinists to continue their work by night even better than by the light of an ordinary cloudy day.

Two lamps giving 1,200 to 1,500 candle-light each serve to amply light a shop 42 feet wide, 72 feet long, and 18 feet high, and this amount of light can be furnished at an expense of three or four H. P. expended on the best machines, and with good lamps burning the best of carbons.

The various batteries in use last year have been carefully examined and tested this year. Some cells of gravity battery have been up a year and a half, always ready for use, and requiring only the addition of water to replace that evaporated. The usual form of the Le Clanché battery has given place to the improved form designed by Lieut. G. A. Converse, which has given the highest satisfaction, some cells of it having now been in use a whole year without replenishing. Nothing better for use on shipboard has thus far appeared.

The station battery has fully sustained its reputation for torpedo-work; its constancy, durability, and power cannot well be surpassed.

The careful insulation attained by thoroughly coating with paraffine the shelves on which these batteries are placed contributes greatly to the durability of its current. All our battery-shelves are now coated

with paraffine; so, too, are the tops and bottoms of the jars of the gravity battery cells.

The "Waffle" or "Tray" cells have been in constant use connected with the Converse circuit indicator, and their performance has been in the highest degree satisfactory. Three Waffle cells supply with current the closed circuits of ten of Converse's indicators, and have never failed.

The Converse circuit indicator has continued to give the best of satisfaction, indicating unerringly at every instant the condition of the battery and of the ten circuits which they supply.

The cables used with these indicators, which are the Siemens copper-sheathed cables, begin to show signs of wear. It was not expected of them to endure as long as they have lasted. They should now be replaced by cables more heavily armored.

The kerite wire that was put down in lead pipe in 1875 maintains well its condition of insulation. While a portion of the kerite which was buried without the lead-pipe protection has proved defective, seeming to have become absorbent of moisture, one or two of these wires needed to be taken up and repaired on account of leaks that developed themselves during the latter part of the summer of 1876. The various samples of kerite thus far supplied to the station differ widely in the quality of durability; some samples that have been at sea two or three years, and so, too, some samples in store and in use at this station for that length of time, and even longer, are as good now as at first, while other samples have materially deteriorated. Evidently the process of covering or the materials used in its composition are productive of very varied results as to durability.

From the experiments made last year on the various electric unions, it has seemed best to adopt the soft-rubber tubing in preference to the other and more elaborate unions of Lieutenant Bradford and of Mr. Wilkes.

Zincs for the gravity-batteries have been furnished by the Newport Manufacturing Company which did not give so good results as those furnished by W. Blake & Co., of Boston, even though made from professedly the same quality of metal. Some few had about 1 per cent. of antimony introduced with the zinc for experimental purposes, but, as was expected, the results were not satisfactory.

The United States steamer Trenton was fitted with an elaborate firing apparatus designed at this station, a more full account of which will be found elsewhere.

Lieut. T. C. McLean has devised a very ingenious apparatus for steering a ship's launch; some few experiments have been tried with it, but this series of experiments is not yet concluded.

Some improvements in the arrangements for permanent wires on shipboard have demanded attention, and the simple form of wire terminals designed by Lieutenant Converse has been adopted in the service. Lieut. G. A. Converse's perfected electric primers give the highest satisfaction for the firing of guns either singly or in broadside.

Experiments have been made with the telephone in order to ascertain its suitableness for communication between the bridge and the powder-magazine, as well as between other parts of a ship. These experiments are now in progress with prospects of success.

It has been found possible to communicate over a circuit of 22,000 ohms, having a stated capacity of 8 microfarads, whence it is easy to see that it would be entirely feasible to communicate through an ocean-cable between two stations that should be at least 500 miles apart. The

rapadity of communication, too, is astonishing, since 145 words in 17 seconds were distinctly heard over a short circuit. This is at the rate of 512 words per minute. The possibility of communicating with way-stations at a distance from the direct line, and without a loop, has been satisfactorily demonstrated by Mr. Farmer with the aid of his assistants.

The experience of the past two years has demonstrated that the method of measuring battery resistances devised and used at this station is the most satisfactory known. By it we are able to obtain results agreeing within one-half of one per cent. of each other, even in the case of batteries that are quite inconstant.

This method is founded on the well-known shunt method, which depends on this principle: If a rheostat open to a great resistance and a galvanometer of fine wire and large resistance be introduced into the circuit of a galvanic battery, a deflection of the needle will be obtained, caused by the current from the battery, which current will not be large if the resistance of the circuit be great, but which will give a sufficiently large deflection if there be many windings or spires of wire on the galvanometer. If the resistance of the galvanometer be equal to that to which the rheostat be opened, and if we should shunt out or remove from the circuit the rheostat resistance, the needle would show a greater deflection than when the rheostat was in circuit. If we should next place a shunt across the poles of the battery, this shunt, having a resistance just equal to that of the battery, we should find that the needle would return to the same deflection at which it stood originally when both the galvanometer and rheostat were in the circuit.

While working this method, it occurred to Lieut. A. R. Couden that if both these changes were made simultaneously, viz, placing a shunt across the poles of the battery, and cutting out the original rheostat resistance, the needle would not alter its position if the shunt resistance were equal to the battery resistance.

Mr. Farmer devised and constructed a key by which, with the use of a single lever, both these changes were simultaneously made, and by the use of this apparatus all our most satisfactory battery measures are now made, as likewise were many of those found in the tables appended to my report of last year.

I would here earnestly renew my appeal, made last year, for a new switch-board of better construction than the one now in use.

MOSES G. FARMER.

Capt. K. R. BREESE, U. S. N.,
Inspector of Ordnance, in charge of Station.

A.

BUREAU OF NAVIGATION, NAVY DEPARTMENT,
Washington, November 10, 1876.

SIR: The bureau, being desirous of having the Wallace electric light tried, to ascertain its suitability for signal purposes, has this day addressed a letter to the manufacturers, Messrs. Wallace & Sons, Ansonia, Conn., that, if agreeable to them, they are authorized to send one to you for trial, to be returned when asked for by the company or when no longer desired, and, if retained, to be paid for at a price to be named on acceptance of the authority for trial.

If this proposition is accepted by the company, you will have the light carefully examined and tested, and report made to this bureau.

You are also informed that this arrangement is in accord with the views of the Chief of the Bureau of Ordnance.

Very respectfully, your obedient servant,

DANL. AMMEN,
Chief of Bureau.

Capt. K. R. BREESE, U. S. N.,
Commanding Torpedo Station, Newport, R. I.

B.

UNITED STATES TORPEDO STATION,
Newport, R. I., January 17, 1877.

SIR: You are herewith appointed a board to examine and report upon the magneto-electric machine and lamp sent here by Messrs. Wallace & Sons, of Ansonia, Conn., by direction of Commodore Daniel Ammen, Chief of the Bureau of Navigation, for the purpose of ascertaining its suitability for signal purposes. In this connection you will please ascertain the following:

First. The horse-power required to drive the machine, noting the revolutions per minute, the amount of light produced, and the amount of electricity in volt-webers acting in the circuit at the time the light is burning at its best adjustment.

Second. Determine the efficiency of the machine; that is, what portion of the power applied is converted into electricity.

Third. How many candle-lights can be obtained from the lamp per horse-power applied.

Fourth. Determine the light-producing power of the machine in function of the power applied and weight of wire employed in the construction of the machine.

Fifth. Also, the efficiency of the machine and lamp in function of the velocity at which the machine is driven.

If it will not take too long, ascertain what is approximately the best velocity at which the machine should be run.

You will be particular to note any peculiar advantages or defects in the construction of the machine and lamp, and make such suggestions as you may think proper in reference thereto.

Please to bear in mind that the machine and lamp is intended for signaling, and, after having given the above due consideration, report to me in detail the experiments, and your opinion as to its suitability for use on shipboard.

Accompanying this is a copy of the order for trial of Commodore Daniel Ammen, Chief of Bureau of Navigation, the order of the Chief of Bureau of Ordnance, and the letter and directions of Wallace & Sons, of Ansonia, Conn., concerning the machine.

Very respectfully,

K. R. BREESE,
Captain U. S. N., Inspector of Ordnance, in charge of Station.

Prof. M. G. FARMER,
Lieut. G. A. CONVERSE,
Lieut. A. R. COUDEN.

C.

ANSONIA, CONN., *January* 9, 1877.

DEAR SIR: We have this day shipped to your address, per order of Com. D. Ammen, Chief of Bureau of Navigation, one magneto-electric machine-lamp and reflector complete, and trust it will arrive safely and prove satisfactory.

Yours, &c.,

WALLACE & SONS.

K. R. BREESE,
Commandant U. S. N. Torpedo Station.

ANSONIA, CONN., *January* 16, 1877.

DEAR SIR: Herewith find memorandum of instructions to assist in a proper manipulation of the lamp which accompanies the magneto-machine sent you for experiment, and which we trust will help you to get effective and satisfactory results.

Yours, &c.,

WALLACE & SONS.

Captain BREESE, U. S. N.

Electric lamp, manufactured by Wallace & Sons, Ansonia, Conn.

In this lamp the lifting-power of the magnet is such as will insure a good separation of the carbons with any amount of current which will produce a good light. Should stronger currents be used, the increased power of the magnet is contracted by the addition of weights to the top of the upper carbon-carrier.

To this end find a pin upon the top of the rod on which said weights are dropped. (Said pin is removed for convenience in packing.)

The separation of the carbons by the action of the magnet is governed by a stirrup attached to the top of the central column and adjustable by a screw.

This stirrup not only governs and limits the separation, but also prevents all irregular motion of the carbons through sudden variations of the strength of the current.

To break the circuit, raise the upper carbon.

To do this, hold the free end of the stirrup down to its seat, and the carbon-carrier will slide freely in its socket.

These parts may be handled without danger of shock, as the central column and its attachments are in circuit with the upper carbon.

The upper carbon travels at double the speed of the lower one, and if the current traverses in the right direction (*i. e.*, from the top to the bottom), it will maintain the light at a fixed and constant elevation.

When burning properly the point of the *upper carbon* will appear the hottest, as it consumes the fastest.

The base of the lamp is provided with a switch for changing the direction of the current, or breaking it without severing connection with the conducting wires.

To use said switch, first and invariably separate by the hand the points of the carbons. Then move the switch levers as may be desired.

To break the circuit at the switch in neglect of this precaution destroys the anvils from the great heat produced by the primary interruption of the current solely at these points.

NAVY DEPARTMENT, BUREAU OF NAVIGATION,
Washington, June 5, 1877.

SIR: The bureau would be pleased to learn whether any experiments have been made with the magneto-electric light machine which was sent to the torpedo station some time ago by Messrs. Wallace & Sons, of Ansonia, Conn., under orders from this bureau; and, if so, whether in your opinion the apparatus is suitable for signaling purposes on board ship.

Very respectfully, your obedient servant,

DANL. AMMEN,
Chief of Bureau.

Capt. K. R. BREESE, U. S. N.,
In charge of United States Torpedo Station, Newport, R. I.

UNITED STATES TORPEDO STATION,
Newport, R. I., June 8, 1877.

SIR: In reply to the bureau's letter of the 5th instant, relative to experiments with a magneto-electric light machine which was sent to this station by Messrs. Wallace & Sons, of Ansonia, I have to state that the machine referred to has been thoroughly tested to determine amount of light given, number of revolutions, and required power.

The data concerning these trials are all in the hands of Professor Farmer for discussion and report, and, but for his illness, would long since have been sent in.

The machine was found fully capable of furnishing an electric light for signaling or illuminating purposes, but, owing to its method of coupling up, required nearly one-half more power to produce the same light as a machine "coupled up" as directed by Professor Farmer, all other things being equal.

The automatic lamp which came with the machine works fairly well. It does not preserve a perfectly uniform length of arc (between the carbons), but near enough for practical purposes. There is no screen with the lamp for shutting off the light for signaling.

I desire to say that, in connection with this trial, comparisons are being made with the best machines and lamps of European manufacture, and a little more experiment under Professor Farmer on his restoration to health or return to the station will show the relative merits of each.

All these comparisons and trials have a direct bearing on signaling and lighting of ships.

Respectfully, your obedient servant,

K. R. BREESE,
Captain U. S. N., Inspector of Ordnance, in charge of Station.

Commodore DANIEL AMMEN, U. S. N.,
Chief Bureau of Navigation, Washington, D. C.

D.

UNITED STATES TORPEDO STATION,
Newport, R. I., October 24, 1877.

SIR: In obedience to your order, we have carefully tested the magneto-electric machine and electric lamp sent here by Wallace & Sons,

of Ansonia, Conn., for the purpose of ascertaining their suitability for signal purposes, and beg leave to report as follows:

Driving the machine with 5.3 horse-power, we got 770 revolutions of the armature per minute, 2,439 candles as a momentary maximum light, the amount averaging about 700 candles, and about 1,300 volt-webers acting in the circuit.

A number of experiments indicated the efficiency of the machine—that is, the portion of the power which is converted into electricity—to be from 40 to 50 per cent.

Five hundred and ninety-eight candle-lights per horse-power applied have been obtained, but the average was much less than this—about 130.

The light-producing power of the machine in function of the power applied and weight of wire employed in the machine is between 3 and 4 candles per horse-power per pound of wire.

The efficiency of the machine in function of the velocity at which the machine is driven was not determined, owing to want of sufficient range of velocities to determine this relation.

We consider the most suitable velocity at which to drive the machine to be from 800 to 1,000 revolutions per minute.

We notice a peculiar method of dividing the coils on each core of the armature into four coils. The object, which is to lessen the extra current, does not compensate for the loss in power which accompanies this arrangement. The armature is cut away in such a way as to weaken it materially and render it liable to rupture when driven at a high speed; otherwise, the machine is compact and strong. It is our opinion that the resistance of the field of force should form a less portion of the whole resistance of the machine; by connecting the field of force-coils so as to make the resistance '4, its efficiency is improved, although that arrangement undoubtedly made the field resistance too small. Probably a better result could be reached by using coarser wire on the field-coils.

The lamp is vey simple in its construction, but has so short a feed that the light can only be shown about one hour continuously, and, from its peculiar construction, the force holding the carbons apart becomes so weakened as the carbons are burned away that the light flickers badly after burning a short time. This, not noticeable while the carbons are long, has been constantly seen during the last ten days, when the lamp has been burned about one hour each day. This flickering affects materially the value of the lamp for signaling or illuminating purposes.

We consider that both lamp and machine are suitable for use on board ship, but that both might be considerably improved—the machine to use less power to drive it, and the lamp to have longer feed and produce a more constant arc.

Very respectfully,

MOSES G. FARMER,
Electrician.

A. R. COUDEN,
Lieutenant and Assistant Inspector of Ordnance.

Capt. K. R. BREESE, U. S. N.,
Inspector of Ordnance, in charge of Station.

E.

UNITED STATES TORPEDO STATION,
Newport, R. I., October 29, 1877.

SIR: In accordance with your instructions contained in your letter of January 17, 1877, we have carefully tested the magento-electric machine and the electric lamp sent here by Messrs. Wallace & Sons, of Ansonia, Conn., and beg leave to report as follows:

The average of 19 experiments gave 6.3 as the horse-power required to maintain a velocity of 825 revolutions per minute, giving a strength of current of 13 to 15 webers and an electro-motive force of about 131 volts, with an external solid resistance of about 4.5 ohms and an internal resistance of 4.85 ohms, which gives 1,834 volt-webers acting in the circuit.

When used to produce light, about 5.3 horse-power gave 2,439 candles (Wallace carbons being used) as a momentary maximum, 770 revolutions per minute, a current of 13 webers, an electro-motive force of about 131 volts, an arc of about $\frac{3}{16}$ inch, polarization or opposing electro-motive about 31 volts, resistance of arc about 2.5 ohms, total resistance in circuit about 7.5 ohms, 1,300 volt-vebers acting in the circuit.

On one occasion ran machine and lamp for one-half hour. The lamp stopped feeding after 18 minutes; after starting again it ran well remainder of half hour. The light given out varied from 300 to 2,700 candles, using Wallace carbons. The speed of the machine varied from 710 to 795 revolutions per minute; the horse-power consumed from 6.48 to 7.28. The carbons gave off considerable flame, which, traveling around the arc, caused the light to vary as it did. About half the time the light given off exceeded 650 candles, and about half the time it was less than 650 candles.

Experiments were made to determine the light-giving power of different carbons with this machine. In the following table of the results obtained, the first column gives the names of the persons or firms from whom the carbons were received; where not otherwise stated, the carbons are made-up carbons.

Carbons.	Revolutions per minute.	Horse-power used.	Candle-light.	Candles per horse-power.	Remarks.
Wallace	800	4.38	2,619	598	During all except the last trial, the field of force-coils of the machine were connected in multiple arc.
Redding	848	4.34	1,211	279	
Redding sawn	845	3.47	402	116	
Siemens	872	3.38	935	276	In last case these coils were connected in series.
Wilde	836	4.05	935	231	
Do	770	5.33	841	158	

The last two experiments above would appear to show that 46% more light per horse-power was obtained with the field-coils connected in multiple arc than in the field-coils in series.

A repetition of this experiment gave the following results, the columns having same arrangement as in table above:

Wallace	732	4.05	729	162.	Field of force in series.
Redding	727	4.07	361	88.4	
Redding sawn	790	4.53	876	193.3	
Siemens	780	4.7	576	122.5	
Wilde	768	4.81	233	48.4	
Do	853	4.04	211	52.	Field of force in multiple arc.
Siemens	854	3.95	340	86.	
Redding sawn	847	2.88	435	156.5	
Wallace	875	2.95	435	147.	

These results differ materially from those given above. In these latter, the distance between candle and lamp was 70 feet, and in the other case the distance was 50 feet. The experiments were made in the evening, and the only illumination was from the electric light and the candle. The great discrepancy between these results indicates that a great number of experiments will be necessary to determine the best methods of coupling the coils. We are satisfied, however, that for the purpose for which the machine was intended it should have less resistance than as arranged when it came here, and that the field resistance should form a less proportion of the whole resistance.

The carbons furnished by Messrs. Wallace & Sons burn at the rate of about 4½ inches per hour. The extreme separation of the carbon holders in the Wallace lamp being but little greater than this, the light can only be shown continuously about one hour.

The amount of light produced by this machine is much inferior to that furnished by machines of same size and similar construction measured at the shops of Messrs. Wallace & Sons, at Ansonia, by Professor Farmer, the light in some cases amounting to 5,600 candles.

In order to determine the efficiency of the machine it is only necessary to reduce volt-webers to corresponding horse-power.

It can be readily shown, and is well known, that a volt-weber is 44.25 foot-pounds per minute, or is equal to .00134 of a horse-power. Hence to convert horse-power into volt-webers it is only necessary to multiply the former by 746; on the contrary, to convert volt-webers into horse-power, multiply by .00134.

To find the efficiency of the machine, therefore, you multiply the volt-webers the machine furnishes by .00134, and divide this product by the amount of horse-power consumed in driving the electrical machine.

Tested by this method we have found as the average of a number of experiments that the efficiency of this machine varies from 40 to 50 per cent.

We have found the maximum light per horse-power of the machine to be about 598 candles; this divided by 175, the number of pounds of wire in the machine, gives 3.41 as the number of candles per horse-power per pound of wire.

We have not thus far been able to get a sufficient range of velocities of the machine to enable us to determine satisfactorily its efficiency in function of the velocity.

Our experiments thus far indicate that when the resistance of the leading wires is very small (a small fraction of an ohm), a velocity of 800 to 900 revolutions per minute is as much as is desirable; when, from any reason, a resistance of 2 or 3 ohms is necessary in the leading wires, a velocity of 1,100 to 1,200 revolutions per minute will give better results. The construction of the armature of this particular machine is such, owing to a groove in the central plate, that we do not deem it safe to greatly exceed this latter velocity.

The machine consists of four electro-magnets, forming the field of force, held between two cast-iron upright-pieces, and a shaft having bearings in the upright-pieces which carries the armature-wheel. The whole stands on a bed-plate, to which the upright-pieces are bolted; the upright-pieces are further secured by a bolt which connects them at the top. The machine and bed are 23 inches high, 34½ inches long, and 13 inches wide. Four legs are supplied with the machine, which, bolted to the bed-plate, raise the machine 18 inches. The legs have a spread at the base of 25½ inches. On board ship the legs would not probably be used, as occupying additional and unnecessary space. The shaft has

bearings 5½ inches long at each end, and carries two driving-pulleys, each 4 inches wide and 6 inches diameter. The cores of the electro-magnets are cast in one with the upright-pieces, two on each upright-piece. When in position, these cores face toward each other, and are situated one on each side above and one on each side below the shaft, and all four in the same vertical plane with the shaft. These cores are in section a segment of a circle whose center is at the center of the shaft, with the angle formed by the chord and circumference rounded off. The cores have a length of 7⅞ inches, and a section 5¾ inches horizontally, by 1¾ inches vertically. The ends are faced with brass about one-eighth-inch thick.

The field-of-force coils are wound on brass spools shaped to fit the cores, the coils 7⅝ inches long and 1⅜ inches thick. They are wound with copper wire 0″.128 diameter, have 48 convolutions in each layer, and 8 layers, making 364 convolutions.

The wire is insulated with closely braided cotton, and before winding the coil the wire with its braiding has been dipped into shellac. The resistance of each coil is .601 ohm at 70° Fahrenheit.

The armatures are two in number, each separate and distinct. The armature-wheel of cast iron is 13 inches in diameter, and has cast on each face twenty-five cores for the armature-coils. A deep score is cut into the armature-wheel between the sets of cores, probably with a view of lessening weight of wheel. The armature-cores are, in section, portions of sectors of a circle, having same center as armature-wheel, and with a radius about a quarter of an inch less than that of armature-wheel. The radial length of each core is about 2 inches, the circumferential length about three-quarters of an inch. The corners are rounded off. The length of these cores is about two and three-quarter inches.

On each of these cores fits a brass bobbin, on each bobbin are four coils of insulated copper wire, .047 inch diameter, each coil extending the whole length of the core. The coils are 2⅝ inches long and ⅜ inch thick, each has 45 convolutions in each layer, and 2 layers, making 360 convolutions on each core. The wire in these coils is insulated with cotton wrapping and the whole dipped in shellac after winding. All the coils on each side of the armature-wheel are connected to a commutator having 100 divisions, thus forming two complete armatures. The commutator-pieces are insulated by air-spaces, the ends resting in box-wood hubs. The resistance of each armature is 4.89 ohms at 70° Fahrenheit.

The commutator-brushes, two for each commutator, are made of small copper wires bound together and soldered.

The field-of-force coils are so connected up that the upper coil on one side of armature-wheel presents the same pole toward the armature as the lower coil on the other side, the other two of the four field-of-force coils presenting each a pole of the opposite name. The diameter of the armature-wheel is such that when revolved the cores of each armature are presented in succession directly opposite the cores of their field-of-force coils. The distance between the faces of the armature-cores and field-of-force cores is about one-eighth of an inch.

The machine is connected with the field-of-force coils in series and armatures in multiple arc. The connections may be readily changed if desirable at any time.

The entire machine weighs 918 pounds, of which the legs form 118 pounds; other cast-iron parts, 576 pounds; copper in field of force, 138 pounds; copper in armature, 45 pounds; brass spools, about 20 pounds, and steel shaft about 21 pounds.

The automatic lamp furnished by Messrs. Wallace & Sons is very

simple in its construction and action. The carbon points are made to approach each other by the greater weight of the upper carbon-holder, and, when the two carbons are in contact, are made to separate and afterward maintain the requisite distance by the attraction of two axial magnets on their cores or armatures.

The upper carbon-holder has a long bearing, and is suspended by two thin metal bands, secured to the circumferences of two metal wheels of equal diameter, situated on opposite sides of the carbon-holder. On the same axles are two similar wheels of half the diameter of the others. From these latter are similarly suspended, by thin metal bands or strips, the two axial magnet cores or armatures. A cross-head, which has fixed to it the lower carbon-holder, connects the two armatures or cores. By this arrangement the upper carbon travels at twice the rate of the lower carbon, and when the upper is connected to the positive pole of the source of electricity the light maintains a constant position.

The magnet-coils are in the light circuit, and the action of the lamp is as follows: The carbons being in contact, when the current is turned on the armatures are attracted downward, carrying with the lower carbon-holder, and by means of the metal suspending-bands producing a partial revolution of the large and small wheels. This movement causes the upper carbon to move upward twice the distance that the lower carbon has moved downward. By this means the arc is established, the establishment of which increases the resistance of the circuit and decreases the strength of current, until the attractive force, acting on the armatures, is just balanced by weight of the upper carbon-holder. An adjustable friction-brake on the upper carbon-holder prevents the carbons from being moved through more than a certain distance. This distance may be readily adjusted.

As the carbons become shorter, the armatures rise and occupy a different position in reference to their coils, and the same current passing through the coils has less force on the armatures. This loss of power is partly compensated by the more rapid burning away of the upper carbon. To maintain a tolerably constant length of arc during the entire length of the carbons, extra weights are provided with the lantern which may be slipped on the upper carbon-holder when the carbons are long, and taken off as the carbons burn away. Very recent trials, continued for several successive days, indicate that this lack of constancy in the light materially affects its value for signaling or illuminating. The length of carbon which may be burned in this lamp without renewal is only about 6 inches, or about 1¼ hours' light. This is a fault; other lamps burn more than twice this length. The withdrawal of the armatures from the coils is probably the cause of this short allowance. No special conveniences of any sort were furnished with this lamp for signaling purposes.

The machine in its general features is built in accordance with suggestions furnished by Professor Farmer, some few details of construction having been varied by Messrs. Wallace & Sons in order to give the machine greater durability. We notice particularly one fault in the construction of the armature, viz, a deep groove cut in the middle of the armature-plate. The object of this groove was apparently to lessen the amount of iron to be magnetized and demagnetized, but the slight advantage gained is not worth the risk of fracture which is thereby engendered when the armature is in rapid rotation.

We notice as another objectionable feature that each armature-core is supplied with four independent coils, which are connected to successive divisions of the commutator. There being twenty-five cores on each

side of the armature, and four coils to each core, there are one hundred divisions in each commutator. The object of this subdivision of the coils and commutators is to reduce the spark arising from the extra current. Although the method adopted of winding the wire on the helices, and of dividing or breaking it up into several smaller helices, does considerably decrease the extra current, it at the same time decreases the capacity or power in about the same ratio.

It is believed by us that this object might be better attained by having the armature-cores smaller, more numerous, and by having those on one side of the armature-wheel placed opposite the spaces on the other side of the wheel, each core to have but one coil, all the coils on both sides of the armature to be connected into one unbroken series, and all connected to one commutator. By having thirty or more coils on each side of the armature, instead of twenty-five, as now, and setting the cores staggering or alternating, as described above, like one built by Professor Farmer some years since, the commutator would have sixty or more divisions, the spark from the extra current would be little, if any, greater than now, and the energy evolved by the machine would be greater.

We find by comparisons made with a machine tried here, having only seventy-five commutator-divisions, built by the same firm for Professor Farmer, that the energy of the latter is considerably greater than that developed by this machine under similar circumstances.

Very respectfully,

MOSES G. FARMER,
Electrician.

A. R. COUDEN,
Lieutenant and Assistant Inspector of Ordnance.

Captain K. R. BREESE, U. S. N.,
Inspector of Ordnance, in charge of Station.

No. 7.—BUREAU OF MEDICINE AND SURGERY.

NAVY DEPARTMENT,
BUREAU OF MEDICINE AND SURGERY,
October 18, 1877.

SIR: Agreeably to your order of the 10th instant, I have the honor to submit the annual report of this bureau, with estimates of deficiencies for the past and current years, and for the support of the medical establishment of the Navy for the fiscal year ending June 30, 1879.

The various squadrons and naval stations have been supplied during the past year with everything requisite for the treatment and comfort of the sick. The health of the Navy has been good. No pestilential or epidemic disease has prevailed, and the mortality has been less than the usual average.

During the past summer the customary visit of inspection was made to most of the principal hospitals of the Navy; and also, for the purpose of comparison, to some of the civil hospitals of the country. The management of the naval hospitals was found to be satisfactory, the officers in charge having done all that was possible with the means at their disposal; but all these establishments presented evidence, more or less, of the parsimony which has of late years been a necessity, in consequence of insufficient appropriations. While the sick have not been deprived of anything indispensable to their proper treatment or comfort, the furni-

ture, the buildings, and the ground surrounding them convey the impression that they are not maintained with the liberality which should characterize establishments belonging to the nation. In these respects they do not compare favorably with many State and municipal institutions of similar character, or even with some of those which are supported solely by the benevolence of private individuals.

The hospitals at Chelsea, Brooklyn, Philadelphia, Washington, and Annapolis require repainting and other repairs made necessary by wear and tear and the action of the elements. The hospital at Norfolk, one of the largest and most substantial, requires very extensive repairs and improvements. The sewerage is defective, the supply of water bad, and the mode of heating, by stoves, is objectionable on account of health, comfort, convenience, economy, and danger from fire. The cost of removing these defects is included in the estimates.

The hospital at Mare Island now receives a large number of patients from the Pacific and Asiatic squadrons. The quarters in the building now necessarily occupied by the medical officer in charge are needed for the accommodation of the sick. An estimate for a house to be built on the hospital grounds for that officer is submitted.

The hospital, or sick quarters, at the navy-yard, Portsmouth, N. H., is an old frame building, originally a farm-house. It is incommodious, badly ventilated, falling into decay from age, and in every respect unfit for use as a hospital. The quarantine hospital, a wooden structure not much better than a shed, is also rapidly decaying, and is liable to be blown down or washed away in a storm. Situated on a small rocky islet at the mouth of the harbor, and thus exposed to the fury of the elements, access to it would be difficult, perhaps impossible, in stormy weather. For these reasons it should be removed or abandoned, as the cost of removal would probably exceed the value of the material.

A very appropriate and beautiful site for a hospital exists on Seavy's Island, belonging to the navy-yard, sufficiently distant from the latter and from the neighboring town to avoid danger of communicating any pestilential disease. On that site a building of moderate dimensions and cost might be erected which would answer all the purposes of the two existing structures.

The proximity of a group of small Japanese dwellings to the naval hospital at Yokohama exposes that building to danger in case of fire, an event which is very probable from their inflammable material and the general use of coal-oil for illumination. The commanding officer and surgeon of the fleet of the Asiatic squadron recommend that the ground on which these houses stand be purchased and added to the hospital grounds. The purchase can be made for the sum of $600.

In 1876, the Secretary of the Navy directed the hospital at Annapolis to be closed, which was accordingly done. In April and May of the present year, an outbreak of measles took place in the town and extended to the Academy, affecting a small number of the cadets. The Superintendent of the Academy very judiciously ordered the hospital to be temporarily reopened for the reception of these cases, thereby preventing, in all probability, the further extension of the disease. The usefulness of the hospital on that occasion is a proof that it would be valuable in similar emergencies.

To most of the naval hospitals outbuildings are attached, intended for the reception of patients affected with smallpox. They are seldom used, and are very much out of repair. As cases of small-pox in the Navy are not numerous, it would be more economical for the government to send such cases to the local hospitals provided for that disease by the civil authorities.

NAVAL HOSPITAL FUND.

Since 1861, the hospital establishment of the Navy has been increased by the addition of the hospitals at Philadelphia, Annapolis, Washington, Mare Island, and Yokohama, Japan. Consequently the expenses have been nearly doubled, while at the same time the hospital fund from which these expenses are paid has diminished in a still larger proportion.

This decrease is due partly to large expenditures in building and furnishing, and partly to the additional expense of supporting a greater number of hospitals. Something is also due to the high prices of provisions, &c., during the last ten years.

The expense of keeping these large establishments open is almost as great with a small as with a large number of patients. The number of attendants cannot be reduced below a certain number, necessary to keep them in proper order, while the cost of heating, lighting, and keeping them in repair is about the same, whatever be the number of inmates.

The hospital-fund, which, as you are aware, is derived from the deduction of twenty cents per month from the pay of the officers and men of the Navy and Marine Corps, and from the value of their rations when in hospital, amounted in 1868 to $436,592.59. That large amount was due to the accumulation of proceeds in the several years preceding, during which a very large number of men were employed in the naval service. Since that period it has rapidly diminished, as the following statement of the amounts to the credit of the fund at the beginning of each fiscal year will show:

July 1, 1868	$436,592 59
July 1, 1869	394,660 69
July 1, 1870	284,758 23
July 1, 1871	200,515 63
July 1, 1872	100,597 65
July 1, 1873	56,534 70
July 1, 1874	26,583 94
July 1, 1875	1,141 37
July 1, 1876	290 92
July 1, 1877	70 63

There is due to the fund from "Pay of the Navy" about $50,000; from the Marine Corps, about $30,000; and from "Surgeons' necessaries and appliances" $52,985.17.

If these amounts can be obtained, there will be sufficient to meet the expenses of the hospital establishment for the current year. Thereafter an annual appropriation of from ninety to one hundred thousand dollars will be required, inasmuch as after the sums above referred to have been received and disbursed, there will be nothing coming to the fund except the regular annual income, which amounts, with the present force of the Navy, to about thirty-seven thousand dollars; not much more than enough to support one of the larger hospitals. An estimate for the support of hospitals for the next fiscal year is therefore submitted.

SURGEONS' NECESSARIES AND APPLIANCES.

The appropriations for surgeons' necessaries and appliances for the last three years, having been very much reduced below the estimates,

were not sufficient for the wants of the service. The deficiency was taken from the hospital-fund, to which there is now due from that source, as previously stated, the sum of $52,985.17.

The practice which has prevailed for many years of furnishing medicines from the public stores to the families of officers at the various naval stations, has of late years proved burdensome to the limited resources of the bureau. No law or regulation authorizes this expenditure, but it has been sanctioned by custom and by the tacit approval of the department. There is no means of accurately ascertaining the amount expended in this way, but it may be roughly estimated at about three or four thousand dollars per annum. In order to legalize this outlay, the sum of $3,000 is asked for in the estimate.

ASSISTANT SURGEONS.

The number of assistant surgeons allowed by law is now, for the first time since 1865, nearly complete, only four vacancies existing, which will probably be filled by the end of the year. In consequence of the difficulty of obtaining properly-qualified young men for the regular corps, authority was given by Congress to the Secretary of the Navy to appoint acting assistant surgeons for temporary service. The number of that class of officers is now twenty-two.

An order of the department requiring assistant surgeons to serve two years at sea before examination for promotion, has been of late years, on account of the small number of ships commissioned for sea-service, difficult of execution within the time, three years, at the end of which they are by law entitled to examination. The operation of the order referred to is found to do injustice to those who have been unable to meet its requirement; the failure to do so being not their fault but that of the department. The attempt to execute the order causes many otherwise unnecessary changes of station, and much useless cost to the government in the payment of traveling-expenses. The revocation or modification of this order is therefore desirable.

By the regulation of 1876, assistant surgeons of the relative rank of ensign are relegated to the steerage. These officers have enjoyed the privileges of the ward-room for a period of more than thirty years, and the same reasons which caused their admission to the ward-room still exist. This retrograde step appears to have been taken because it was deemed proper that officers of the same relative rank should live and mess together on board ship. The law of March 3, 1871, provides that "no staff-officer shall, in virtue of his relative rank or precedence, have any additional right to quarters." A fair inference from that proviso seems to be that while it conferred no additional rights, it recognized and confirmed those already existing.

Instruction in hygiene, chemical manipulation, and microscopy, a knowledge of which is now indispensable to the accomplished physician, is not given, or very imperfectly given, in most of the medical schools of the country. In some of the large cities special instruction in these branches is given, sometimes in connection with the colleges, but attendance by students is not obligatory or necessary to graduation; consequently, many of the young men who enter the service as assistant surgeons are not as well informed on these subjects as they should be. In view of this important deficiency in their education, it is recommended that assistant surgeons be ordered, some months previous to their examination for promotion, to the hospital at New York for instruction in these branches. New York is recommended because the

naval laboratory on the hospital-grounds can afford facilities for chemical study not otherwise attainable without considerable expense. In addition to the facilities for study and observation offered by the naval hospital and laboratory, the large civil hospitals of the city would be within easy reach. A diligent attendance upon them for a few months would be equivalent to the experience of many years in the ordinary practice of the Navy.

APOTHECARIES.

A permanent corps of apothecaries for the Navy is very desirable. These useful officers are now appointed for the cruise by the surgeons of ships, and at hospitals and navy-yards by the chief medical officer, for an indefinite length of time. On account of the brief time for which the appointment is made, and the uncertainty of its tenure, as well as the inferior rank assigned to them, that of "petty officer," competent men of good character and habits are with difficulty obtained, and with still greater difficulty retained in the service. They should be appointed by warrant, or otherwise, by the Secretary of the Navy, after having been examined and approved by a board of medical officers. They should have a certain rank in the Navy, and be assigned to suitable quarters on board ship, instead of being, as now, compelled to live and mess on the berth-deck. The Navy is a very conservative body, attached to old customs and opposed to innovations, yet in this case, the obvious advantages to be derived from the change suggested will, it is hoped, overcome these obstacles.

The instruments and instructions for carrying out your order of May 21, 1877, directing hygrometric and eudiometric observations to be made on board the ships of the Navy in commission, have been prepared and are now being issued. Great benefit to the Navy will doubtless result from these observations. The sanitary arrangement of our ships of war, which has been, to a great extent, governed by the dissimilar mandates of commanding officers, will be hereafter established upon a scientific basis.

Sufficient matter has accumulated for the publication of another volume of Medical and Sanitary Reports of the Navy. The previous volume, published in 1875, containing the reports of 1873–'74, was received with much favor by the medical profession, and, it is believed, has been of great value to the Navy by diffusing among the officers some knowledge of sanitary science.

A report of surgical casualties in the Navy from 1860 to 1870 has been in preparation for several years under the supervision of a medical inspector of the Navy, and is now ready for publication. A joint resolution introduced in the House of Representatives (Forty-fourth Congress, second session), authorizing the Public Printer to print and bind five thousand copies of this work, failed to pass. As the report is a carefully-prepared summary of a vast amount of experience, a knowledge of which would be beneficial to the community, as well as to the medical profession, your influence in procuring the legislation necessary for its publication is solicited.

The bureau has in preparation a new book of "Instructions to Medical Officers," containing changes made necessary by orders issued by the department since the last issue in 1873, and embodying such improvements as time and experience have suggested. In a short time it will be submitted to you for approval.

An additional clerk is necessary in this bureau. The information required by the Commissioner of Pensions from this office would alone

give him sufficient employment. With our present small clerical force, applicants for pension have the adjustment of their claims unavoidably delayed by our inability to furnish promptly the necessary evidence. An estimate for one additional clerk of class two is submitted in the estimates for the bureau.

The medical statistics of the Navy for the year ending December 31, 1876, and also a summary statement showing the death rate and comparative health of the various squadrons for the years 1865 to 1876, inclusive, are appended to this report.

I have the honor to be, very respectfully, your obedient servant,

W. GRIER,
Surgeon-General, United States Navy.

Hon. RICHARD W. THOMPSON,
Secretary of the Navy.

A.—*Annual statement compiled from sick-reports from naval stations and vessels in commission on home and foreign service for the year ending December* 31, 1876.

	Average number on board in 1876.	Remaining sick December 31, 1875.	Admitted in 1876.	Discharged in 1876.	Died in 1876.	Total treated in 1876.	Remaining sick December 31, 1876.	Percentage of deaths to number treated.
HOSPITALS.								
Chelsea	.....	6	53	36	8	59	15	.....
Brooklyn	.....	43	202	208	4	245	33	.....
Philadelphia	.....	35	145	139	21	180	20	.....
Annapolis	.....	4	17	20	1	21	.....	.....
Washington	.....	19	58	62	6	77	9	.....
Norfolk	.....	27	236	229	8	263	26	.....
Pensacola	.....	2	25	24	1	27	2	.....
Mare Island	.....	43	114	99	15	157	43	.....
Yokohama, Japan	.....	15	68	75	1	83	7	.....
Total	.....	194	918	892	65	1,112	155	0.05
NAVY-YARDS AND STATIONS.								
Portsmouth, N. H.	.....	6	90	91	2	96	3	.....
Boston	.....	.....	123	118	1	123	4	.....
Brooklyn	.....	7	239	233	1	246	12	.....
Philadelphia	.....	2	80	81	.....	82	1	.....
League Island	.....	2	.....	2	.....	2	.....	.....
Washington	.....	1	239	237	.....	240	3	.....
Norfolk	.....	1	164	161	1	165	3	.....
Pensacola	.....	1	60	59	.....	61	2	.....
Mare Island	.....	3	42	43	.....	45	2	.....
Torpedo Station	.....	1	44	42	1	45	2	.....
Naval Academy	.....	23	847	857	2	870	11	.....
Marine Barracks, New York	.....	7	239	233	1	246	12	.....
Marine Barracks, Washington	.....	.....	195	195	.....	195	.....	.....
Total	.....	54	2,362	2,352	9	2,416	55	0.004
RECEIVING-SHIPS.								
Portsmouth, N. H.	163	2	157	158	1	159	.....	.....
Boston	235	7	110	115	.....	117	2	.....
Brooklyn	383	3	99	99	.....	102	3	.....
Philadelphia	102	3	77	80	.....	80	.....	.....
Norfolk	170	1	88	89	.....	89	.....	.....
Mare Island	111	4	63	67	.....	67	.....	.....
Total	1,169	20	594	608	1	614	5	0.001

SUMMARY OF VESSELS IN COMMISSION.

Average number of persons on board during year 1876	11,138
Remaining sick December 31, 1875	222
Admitted in 1876	7,575
Discharged in 1876	7,605
Died in 1876	41
Total treated in 1876	7,797
Remaining sick December 31, 1876	151
Percentage of cases to number on board	0.70
Percentage of deaths to number on board	0.003
Percentage of deaths to number of cases treated	0.005

RECAPITULATION.

	Aggregate number of officers and men on board in 1876.	Remaining sick December 31, 1875.	Admitted in 1876.	Discharged in 1876.	Died in 1876.	Total treated in 1876	Remaining sick December 31, 1876.	Percentage of cases to number of persons on board.	Percentage of deaths to number of persons on board.	Percentage of deaths to number of persons treated.
Naval hospitals	.....	194	918	892	65	1,112	155	.....	.....	0.05
Yards and stations	.....	54	2,362	2,352	9	2,416	55	.....	.....	0.004
Receiving-ships	1,169	20	594	606	1	614	5	0.50	0.001	0.001
Vessels in commission at sea	11,138	222	7,575	7,605	41	7,797	151	0.70	0.003	0.005
Total	12,307	490	11,449	11,457	116	11,939	366	0.90	0.009	0.009

At the close of the year 1875 there remained under treatment 490 cases; during the year 1876 there occurred 11,449 cases of disease, injury, &c., making a total of 11,939 cases treated during the year; of which number 116 died, 11,457 were returned to duty or discharged the service, leaving 366 cases under treatment at the close of the year 1876.

The average strength of the Navy (officers, seamen, marines, engineer service, and coast survey included) for the year 1876, as near as can be ascertained, was about 12,307.

The percentage of cases admitted to the whole number of persons in the service was about 0.90, or each person was on the sick-list $\frac{90}{100}$ times during the year. The percentage of deaths to the whole number of persons in the service was 0.009, and the percentage of deaths to number of cases treated was 0.009.

The total number of deaths from all causes, reported to the Navy Department, from October 1, 1876, to October 1, 1877, was 101.

Summary of prevalent forms of disease on home and foreign service for the year ending December 31, 1876.

	North Atlantic.		South Atlantic.		European.		Pacific.		Asiatic.		Special service.		School and practice.		Coast-survey.		Total.	
Aggregate number of men	5,920.		430.		1,238.		1,093.		1,304.		301.		742.		110.		11,138.	
	Cases treated.	Deaths.	Cases treated.	Deaths.	Cases treated.	Deaths.	Cases treated.	Deaths.	Cases treated.	Deaths.	Cases treated.	Deaths.	Cases treated.	Deaths.	Cases treated.	Deaths.	Cases treated.	Deaths.
Class I.—Zymotic diseases:																		
Order I.—Miasmatic diseases:																		
Catarrhus epidemicus	5				35				3						12		55	
Cholera epidemica																	1	
Cynanche parotidea									1									
Denguis																		
Diphtheria	1																1	
Erysipelas	8		2		1		5		10				1		1		28	
Febris cerebro-spinalis					5												5	
Febris continua simplex	58		15		10		11		6		1		1				102	
Febris enterica	7		1		1						1		2	1			12	1
Febris flava																		
Febris intermittens	195		11		49		75		86		20		11		6		453	
Febris recidiva	1				1												2	
Febris remittens	38				7		18		7		4				2		76	
Febris typhus	4																4	
Morbilli	1						1										2	
Pertussis																		
Pestis																		
Phagedæna putris									3								3	
Pyæmia																		
Scarlatina	2																2	
Varicella	1																1	
Variola	2								3	1							5	1
Varioloides																		
Vaccinia					1												1	
Order II.—Enthetic diseases:																		
Syphilis primitiva	93		19		40		41		65		2		2		9		271	
Syphilis consecutiva	53		15		10		19		49		1		4		2		153	
Gonorrhœa	65		19		12		62		70		4		12		6		250	
Ophthalmia gonorrhöica																		
Bubo	7								5								12	
Chancroid	1		3						9								13	

Summary of prevalent forms of disease on home and foreign service for the year ending December 31, 1876—Continued.

	North Atlantic.		South Atlantic.		European.		Pacific.		Asiatic.		Special service.		School and practice.		Coast-survey.		Total.	
	Cases treated.	Deaths.	Cases treated.	Deaths.	Cases treated.	Deaths.	Cases treated.	Deaths.	Cases treated.	Deaths.	Cases treated.	Deaths.	Cases treated.	Deaths.	Cases treated.	Deaths.	Cases treated.	Deaths.
Class I.—Zymotic diseases—Continued.																		
Order III.—Dietic diseases:																		
Alcoholismus	39		1		5		39		18	1	5		1		2		110	1
Delirium tremens	6		2				2		1								11	
Ebriositas	1								29				1				31	
Fames																		
Scorbutus					1												1	
Class II.—Constitutional diseases:																		
Order I.—Diathetic diseases:																		
Adynamia	80				29		8		23				20				160	
Anæmia	4								1		1						6	
Carcinoma									1								1	
Gangræna senilis	1																1	
Hydrops	1				2												3	
Podagra	5				1												6	
Rheumatismus acutus	109		5		23		42		84		8		1		4		276	
Rheumatismus chronicus	122		8		20		48		47		2		1		2		250	
Order II.—Developmental diseases:																		
Atrophia	1																1	
Degeneratio																		
Hypertrophia									1								1	
Senectus	2						2										4	
Order III.—Tubercular diseases:																		
Scrofula	2						1		1								4	
Tuberculosis	3																3	
Class III.—Parasitic diseases:																		
Scabies	1								2								3	
Vermes	2		1								1						4	
Tænia lata	1																1	
Class IV.—Local diseases:																		
Order I.—Diseases of the nervous system:																		
Apoplexia	8	2					1										9	2
Cephalalgia	37				3		6		19		2		3		1		71	
Cerebritis	1																1	
Chorea	1																1	
Dementia	9		1		1		2		3								16	

Epilepsia	16		1		3		6		8								34	
Insolatio	5						1		1				1				8	
Irritatio spinalis							1				1						2	
Mania	3								1				1				5	
Melancholia	2						3		1		3						9	
Meningitis	1						1										2	
Myelitis																		
Neuralgia	71		3		12		44		27		6		5				168	
Nostalgia																		
Paralysis	2		1		2				1				1				7	
Vertigo	6						1		1		1						9	
Congestion of the brain	2								1								3	
Pleurodynia	2																2	
Exhaustion									1								1	
Order II.—Diseases of the eye:																		
Amaurosis	4		1						1								6	
Cataracta	1																1	
Conjunctivitis	38		1		11		5		8		3		3		2		71	
Fistula lachrymalis	1												2				3	
Hemeralopia					4												4	
Iritis	4		7	1					1								12	1
Nyctalopia																		
Ophthalmia	7				2				4								13	
Pterygium	1																1	
Retinitis	1				1		1										3	
Ulcus cornea	1																1	
Hordeolum	1																1	
Corneitis	1																1	
Order III.—Diseases of the ear:																		
Otalgia	2												1				3	
Otitis	7				1				6								14	
Otorrhœa	4				2				1				1				8	
Surditas	7						1		1								9	
Order IV.—Diseases of the teeth:																		
Odontalgia	3								2		1				2		8	
Order V.—Diseases of the circulatory system:																		
Aneurysma					1	1			1								2	1
Angina pectoris	1								1						1		3	
Endocarditis																		
Hydrops pericardii																		
Hypertrophia cordis	1																1	
Morbi valvularum cordis	5		2	1	2		3		6		1						19	1
Palpitatio	28				7		8		9								52	
Pericarditis	1						2		5								8	
Phlebitis	2																2	
Varix	6								1								7	
Hæmoptysis	1																1	
Dilatatio cordis	2																2	
Order VI.—Diseases of the respiratory system:																		
Apnœa	1																1	
Asthma	23		1		1		3		3								31	
Bronchitis acuta	95	1	5		19		42		39		18		1		2		221	1

Summary of prevalent forms of disease on home and foreign service for the year ending December 31, 1876—Continued.

	North Atlantic.		South Atlantic.		European.		Pacific.		Asiatic.		Special service.		School and practice.		Coast-survey.		Total.	
	Cases treated.	Deaths.	Cases treated.	Deaths.	Cases treated.	Deaths.	Cases treated.	Deaths.	Cases treated.	Deaths.	Cases treated.	Deaths.	Cases treated.	Deaths.	Cases treated.	Deaths.	Cases treated.	Deaths.
Class IV.—Local diseases—Continued.																		
Order VI—Diseases of the respiratory system:																		
Bronchitis chronica	25		2		3		13		14		2		1				60	
Catarrhus	147		6		39		68		35		16		40				351	
Epistaxis	1														1		2	
Hydrothorax																		
Laryngitis	7				4		2				6				5		24	
Phthisis pneumonica acuta	5						1	1			1						7	1
Phthisis pneumonica chronica	13		1		5	2	7		3		2						31	2
Pleuritis	21		1		3	1	8		4		4						41	1
Pneumonia	23	2	1				2		4	1	2	2			2		34	5
Emphysema	2																2	
Congestion of lungs	1																1	
Hæmoptysis					1				3		1						5	
Order VII.—Diseases of the digestive system:																		
Ascites			1	1													1	1
Cholera morbus	28		4		38		16		21		2		5		1		115	
Cirrhosis hepatis																		
Colica	36		2		2		11		30		5		2		2		90	
Constipatio	19				6		5		5		4		1		8		48	
Diarrhœa acuta	146		7		52	1	60		192	1	16		29		9		511	2
Diarrhœa chronica	15						2	1	13	3	1						31	4
Dysenteria acuta	36		12		16		3		35		11		2		5		120	
Dysenteria chronica	8				2		3		1								14	
Dyspepsia	18		1		4		10		31		3				1		68	
Enteritis	1		1		1				1								4	
Fistula in ano	7		1		2		3		2								15	
Gastritis	3								1		1						5	
Hæmatemesis					6		4		1								11	
Hæmorrhois	26		6		1		1		10		3						47	
Hepatitis acuta	3								1								4	
Hepatitis chronica	3		1				2										6	
Icterus	6		1		2		5	1	3		2						19	1
Peritonitis							1										1	
Pharyngitis	8		1		3		2				9						23	
Prolapsus ani							1										1	

Splenitis	2																2	
Stomatitis	2																2	
Tonsillitis	81		7		16		27		34		12		5		2		184	
Parotitis	3		1														4	
Pyrosis									1								1	
Order VIII.—Diseases of the urinary and genital system:																		
Albuminuria					1	1	1										2	1
Calculus									2								2	
Cystitis	2		1		1		7		2								13	
Diabetes			1														1	
Dysuria	2						1		3								6	
Ischuria	1																1	
Nephritis	1								1		1						3	
Orchitis	43		2		14		9		42		1		1		3		115	
Paraphymosis							2										2	
Phymosis	3				3		2										8	
Enuresis	2								2								4	
Fistula vesicæ	1																1	
Hæmaturia	2																2	
Hydrocele	2						1		2								5	
Spermatorrhœa	3						1								1		5	
Urethræ strictura	20		4		2		3		10								39	
Varicocele	6																6	
Epididymitis	1								2								3	
Order IX.—Diseases of the locomotive system:																		
Arthritis	6						2										8	
Ankylosis	2				1				1								4	
Caries									2		1						3	
Coxalgia																		
Hydrops articulorum	2																2	
Necrosis	2								2		1						5	
Ostitis	1																1	
Periostitis	7				2				1		2						12	
Synovitis	3				2		1		5								11	
Myositis	1																1	
Order X.—Diseases of the integumentary system:																		
Abscessus	104		4		49	1	26		54		9		12		5		263	1
Acne	3						3										6	
Adenitas	57		7		16		21		23				3				127	
Anthrax	5		4		2				5								16	
Ecthyma	1				3		3										7	
Eczema	7		4		2		6		6								25	
Erythema	3								3								6	
Furunculus	127		18		56		50		61		7		14		3		336	
Herpes			1		1		1										3	
Impetigo																		
Lepra																		
Lichen	1																1	
Paronychia	21		20		6		10		13								70	
Pemphigus																		
Pernio	2				9				2		1						14	

Summary of prevalent forms of disease on home and foreign service for the year ending December 31, 1876—Continued.

	North Atlantic.		South Atlantic.		European.		Pacific.		Asiatic.		Special service.		School and practice.		Coast-survey.		Total.	
	Cases treated.	Deaths.	Cases treated.	Deaths.	Cases treated.	Deaths.	Cases treated.	Deaths.	Cases treated.	Deaths.	Cases treated.	Deaths.	Cases treated.	Deaths.	Cases treated.	Deaths.	Cases treated.	Deaths.
Class IV.—Local diseases—Continued.																		
Order X.—Diseases of the integumentary system:																		
Porrigo															2		2	
Prurigo									1									1
Psoriasis	1								2								3	
Rupia	2																2	
Unguis involutis	1																1	
Ulcus	10				1		1		12				1				25	
Cellulitis	3						1				2						6	
Onychia	1																1	
Class V.—Non-malignant tumors and cysts:																		
Adenoma	2								1								3	
Angeioma																		
Cystis sebacea	2																2	
Enchondroma																		
Fibroma																		
Lipoma	1																1	
Neuroma																		
Osteoma																		
Polypus																		
Sarcoma																		
Epithelioma	1																1	
Class VI.—Violent diseases and deaths:																		
Order I.—Wounds, injuries, and accidents:																		
Abrasio	33		5		15		24		9		1		2		1		90	
Ambustio	43		3		15		3		16				1		1		82	
Concussio cerebri	2								1				2	1			5	1
Contusio	175		21		86		75		108		15		8		4		492	
Explosio	2				4												6	
Fractura	25	2			5		9		5								44	2
Hernia	30		1		5		3		2				2				43	
Luxatio	17		1		2		6		3		2				1		32	
Stremma	92		16		29		30		28		9		12		1		217	
Submersio	2	2					2	2	1	1	3	2					8	7
Venenatio	3	1							1		4						8	1

Vulnus contusum	81	.....	8	.....	13	.....	27	.....	39	.....	9	.....	27	.....	1	.....	205	.....
Vulnus incisum	69	.....	5	.....	24	.....	23	.....	17	.....	.....	.....	5	.....	.....	.....	143	.....
Vulnus laceratum	37	1	2	.....	14	.....	14	1	9	.....	2	.....	2	.....	1	.....	81	2
Vulnus punctum	31	.....	3	.....	9	.....	14	.....	12	.....	.....	.....	3	.....	.....	.....	72	.....
Vulnus sclopetarium	4	.....	.....	.....	1	.....	.....	.....	2	.....	.....	.....	.....	.....	.....	.....	7	.....
Vulnus venenatum	2	.....	.....	.....	.....	.....	.....	.....	.....	.....	.....	.....	.....	.....	.....	.....	2	.....
Concussio spinalis	2	.....	.....	.....	.....	.....	.....	.....	.....	.....	.....	.....	.....	.....	.....	.....	2	.....
Total	3,151	11	313	3	924	7	1,144	6	1,636	8	259	4	256	2	114	.....	7,797	41

Medical statistics of the United States Navy for the years 1865 to 1876, inclusive.

Year.	Aggregate number of men.	Cases treated.	Deaths.	Sick-rate per M.	Death-rate per M of sick.	Highest sick-rate per M and stations.	Highest death-rate per M and stations.	Lowest sick-rate per M and stations.	Lowest death-rate per M and stations.
1865	29,400	38,076	480	1,265 +	12 +	2,538 + Iron-clads	34 + West Indies	927 + European	0 Coast Survey.
1866	15,108	15,121	179	1,053 +	11 +	1,662 + Asiatic	17 + European	654 + Coast Survey	3 + School and practice.
1867	10,862	12,231	206	1,127 +	16 +	1,575 + Asiatic	115 + Coast Survey	590 + Coast Survey	0 School and practice.
1868	13,310	10,456	106	785 +	10 +	1,111 + Asiatic	13 + Special service	274 + Special service	0 Coast Survey.
1869	12,201	8,325	64	682 +	7 +	1,653 + Coast Survey	11 + South Atlantic and Pacific	425 + School and practice	0 Coast Survey.
1870	10,760	8,904	52	827 +	5 +	1,331 + South Atlantic	12 + Special service	357 + School and practice	0 Coast Survey.
1871	10,763	10,118	81	940 +	8 +	1,258 + North Atlantic	13 + Asiatic	393 + Special service	0 Coast Survey.
1872	11,570	9,207	61	795 +	6 +	2,040 + Coast Survey	10 + North Atlantic	707 + Special service	0 School and practice.
1873	12,723	8,828	55	694 +	6 +	930 + South Atlantic	11 + European	416 School and practice	0 School and practice.
1874	13,870	9,995	64	720 +	6 +	1,125 + Coast Survey	11 + European	470 School and practice	0 School and practice.
1875	10,141	7,832	49	772 +	6 +	1,191 + Coast Survey	20 + South Atlantic	587 + Special service	3 + North Atlantic.
1876	11,138	7,797	41	700 +	5 +	1,254 + Asiatic	16 + Special service	345 + School and practice	0 Coast Survey.

Of the classes of the four most frequently recurring diseases the following have the death-rate per thousand.

Year.	Classes.			
	Diseases of the circulatory system.	Diseases of the respiratory system.	Febrile diseases.	Diseases of the digestive system.
1865	17+	22+	15+	6+
1866	46+	21+	19+	11+
1867	47+	23+	46+	6+
1868	38+	33+	24+	4+
1869	28+	21+	16+	4+
1870	20+	11+	8+	3+
1871	31+	17+	8+	5+
1872	36+	17+	10+	6+
1873	50+	11+	9+	4+
1874	61+	11+	10+	5+
1875	60+	15+	14+	2+
1876	20+	12+	2+	5+

Comparative health of squadrons as determined by their respective death-rates.

Death-rate per thousand of aggregate number of men.

	1.	2.	3.	4.	5.	6.
1865	West Indies 42	Mississippi 41	European 20	Atlantic 18	Iron clads 17	Gulf 11
1866	Asiatic 19	Gulf 17	North Atlantic 14	European 14	South Atlantic 13	Special service 13
1867	Coast Survey 68	North Atlantic 36	North Pacific 27	South Atlantic 14	South Pacific 11	Asiatic 9
1868	Asiatic 13	South Pacific 10	North Atlantic 9	North Pacific 9	European 6	Special service 3
1869	South Atlantic 8	Pacific 6	European 4	North Atlantic 4	Asiatic 4	School and practice 3
1870	Special service 8	South Atlantic 5	Pacific 5	Asiatic 4	North Atlantic 4	European 3
1871	Asiatic 12	European 9	South Atlantic 7	School and practice 6	North Atlantic 5	Pacific 5
1872	North Atlantic 8	European 6	Asiatic 4	Pacific 3	South Atlantic 3	Special service 1
1873	European 7	South Atlantic 6	Pacific 5	Asiatic 4	Special service 2	North Atlantic 2
1874	Asiatic 8	European 7	Pacific 5	North Atlantic 3	South Atlantic 2	Special service 1
1875	South Atlantic 13	Asiatic 5	Pacific 5	European 4	Special service 3	North Atlantic 2
1876	Special service 13	Asiatic 6	South Atlantic 6	Pacific 5	European 5	School and practice 2

	7.	8.	9.	10.	11.	12.	13.
1865	Asiatic 9	Brazil 7	Special service 6	Pacific 6	School and practice. 5	Potomac 1	Coast Survey 0
1866	Coast Survey 7	North Pacific 7	South Pacific 5	School and practice. 4			
1867	Special service 8	European 5	School and practice. 0				
1868	South Atlantic 2	School and practice. 1	Coast Survey 0				
1869	Special service 2	Coast Survey 0					
1870	Coast Survey 0	School and practice. 0					
1871	Special service 4	Coast Survey 0					
1872	Coast Survey 0	School and practice. 0					
1873	Coast Survey 0	School and practice. 0					
1874	Coast Survey 0	School and practice. 0					
1875	School and practice. 2	Coast Survey 0					
1876	North Atlantic 1	Coast Survey 0					

INSANE OF THE NAVY.

On the 30th September, 1876, there remained under treatment in the Government Hospital for the Insane 2 commanders, 2 lieutenant-commanders, 1 assistant engineer, 1 late ensign, 1 mate, 11 seamen, 1 ordinary seaman, 3 ordinary seamen extra, 1 seaman extra fireman, 1 coal-heaver, 8 marines, 3 beneficiaries; total... 48

Admitted during the year ending September 30, 1877, 1 beneficiary, 2 marines, 2 landsmen, and 1 second-class fireman 6

Total number under treatment during the year 54

Discharged during the year ending September 30, 1877, 1 mate, 2 seamen, 1 ordinary seaman extra, 1 coal-heaver, 5 landsmen, 1 late landsman, 3 marines, 1 beneficiary; total 15

Remaining at the end of the year, 2 commanders, 2 lieutenant-commanders, 1 assistant engineer, 1 late ensign, 9 seamen, 1 ordinary seaman, 2 ordinary seamen extra, 1 seaman extra fireman, 1 late seaman, 8 landsmen, 7 marines, 3 beneficiaries, 1 second-class boy; total 39

In the Insane Asylum of California there are 2 marines, 1 seaman, and 1 coal-heaver; total 4

Alaska, 2d rate. Screw; wood; 1,122 *tons.*

[Employed on the European station, west coast of Africa, and Home station for 279 days (1st, 2d, and 3d quarters, and 5 days of 4th quarter) of the year 1876. Average number of ship's company for that period, 243; total sick-days, 1,586, representing the following diseases:]

Diseases.	Remaining.	Admitted.	Discharged.	Discharged from service.	Transferred.	Died.	Remaining.
Miasmatic		12	12				
Enthetic	1	5	6				
Dietic		1	1				
Diathetic	1	13	14				
Developmental							
Tubercular							
Parasitic							
Of the nervous system							
eye		7	7				
ear							
teeth							
circulatory system		3	2			1	
respiratory system		8	6		2		
pigestive system	2	16	17			1	
urinary and genital system		1				1	
locomotive system		3	3				
integumentary system		15	12		3		
Non-malignant tumors and cysts							
Wounds, injuries, and accidents	1	15	16				
Total	5	99	96		5	3	

Alert, 3d rate. Screw; iron; 541 tons.

[Employed during the year 1876 fitting out, *en route*, and on the Asiatic station. Average number of ship's company, 150; total sick-days, 1,180, under the following diseases:]

Diseases.	Remaining.	Admitted.	Discharged.	Discharged from service.	Transferred.	Died.	Remaining.
Miasmatic		13	13				
Enthetic		4	3				1
Dietic		1	1				
Diathetic	1	8	6	2	1		
Developmental							
Tubercular							
Parasitic							
Of the nervous system		5	2	1	1		1
eye		1	1				
ear							
teeth							
circulatory system		3	3				
respiratory system		3	2				1
igestive system	1	27	24		1	1	2
urinary and genital system		5	5				
locomotive system							
integumentary system	1	5	6				
Non-malignant tumors and cysts							
Wounds, injuries, and accidents	1	43	41		3		
Total	4	118	107	3	6	1	5

Ashuelot, 3d rate. Paddle-wheel; iron; 786 tons.

[Employed during the year 1876 on the Asiatic station. Average number of ship's company, 130; total sick-days, 1,221, under the following diseases:]

Diseases.	Remaining.	Admitted.	Discharged.	Discharged from service.	Transferred.	Died.	Remaining.
Miasmatic		30	30				
Enthetic		8	7				1
Dietic		1	1				
Diathetic		8	7	1			
Developmental		1			1		
Tubercular							
Parasitic		1	1				
Of the nervous system		4	4				
eye		1	1				
ear		1	1				
teeth		1	1				
circulatory system							
respiratory system		3	3				
digestive system	1	53	51	2			1
urinary and genital system		3	3				
locomotive system		1		1			
integumentary system		15	13	1			1
Non-malignant tumors and cysts							
Wounds, injuries, and accidents	2	20	21		1		
Total	3	151	144	5	2		3

Adams, 3d rate. Screw; wood; 615 tons.

[Employed for 160 days of the year 1876 (68 days 3d quarter, 92 days 4th quarter) on the Home station. Average number of ship's company, 200; total sick-days, 311, under the following diseases:]

Diseases.	Remaining.	Admitted.	Discharged.	Discharged from service.	Transferred.	Died.	Remaining.
Miasmatic		1			1		
Enthetic		4	4				
Dietic							
Diathetic		2	2				
Developmental							
Tubercular		2	1	1			
Parasitic							
Of the nervous system							
eye		3	3				
ear							
teeth							
circulatory system							
respiratory system		4	3		1		
digestive system		1	1				
urinary and genital system		1	1				
ocomotive system		1	1				
integumentary system		3	2				1
Non-malignant tumors and cysts							
Wounds, injuries, and accidents		13	11		1		1
Total		35	29	1	3		2

Ajax, 4th rate. Screw; iron-clad; 550 tons.

[Employed for 140 days in the year 1876 (38 days 1st quarter, 91 days 2d quarter, 11 days 3d quarter), on the Home station. Average number of ship's company, 62+; total sick days, 163, under the following diseases:]

Diseases.	Remaining.	Admitted.	Discharged.	Discharged from service.	Transferred.	Died.	Remaining.
Miasmatic		2	1		1		
Enthetic		1	1				
Dietic		1	1				
Diathetic		2	2				
Developmental							
Tubercular		1	1				
Parasitic							
Of the nervous system							
eye							
ear							
teeth							
circulatory system							
respiratory system		1	1				
digestive system							
urinary and genital system							
locomotive system		2	2				
integumentary system		2	2				
Non-malignant tumors and cysts							
Wounds, injuries, and accidents		4	3		1		
Total		16	14		2		

Alarm, 4th rate. Wheel; iron; 311 tons.

[Torpedo-boat. Employed for 182 days (1st and 2d quarters), 1876, on the Home station. Average number ship's company, 49 +; total sick days, 351, divided under the following diseases:]

Diseases.	Remaining.	Admitted.	Discharged.	Discharged from service.	Transferred.	Died.	Remaining.
Miasmatic		24	23		1		
Enthetic		3	3				
Dietic		1	1				
Diathetic		7	5		1		1
Developmental							
Tubercular							
Parasitic							
Of the nervous system							
eye							
ear							
teeth							
circulatory system							
respiratory system		2	2				
digestive system		11	9				2
urinary and genital system		2			1		1
locomotive system							
integumentary system		1	1				
Non-malignant tumors and cysts							
Wounds, injuries, and accidents		9	9				
Total		60	53		3		4

Brooklyn, 2d rate. Screw; wood; 2,000 tons.

[Employed for 203 days of the year 1876, on the Home station (1st and 2d quarters, and 21 days of 3d quarter). Average number of ship's company for that period, 246; total sick days, 1,288, with the following diseases:]

Diseases.	Remaining.	Admitted.	Discharged.	Discharged from service.	Transferred.	Died.	Remaining.
Miasmatic		3	3				
Enthetic	1	10	8		3		
Dietic		6	6				
Diathetic	1	13	11	1	2		
Developmental							
Tubercular							
Parasitic							
Of the nervous system	2	5	5	1	1		
eye		1			1		
ear							
teeth							
circulatory system	1	1			2		
respiratory system		25	23	1	1		
digestive system	1	35	34	1	1		
urinary and genital system		7	5	1	1		
locomotive system							
integumentary system		8	7	1			
Non-malignant tumors and cysts							
Wounds, injuries, and accidents	1	30	30	1			
Total	7	144	132	7	12		

Bache. Coast Survey.

[For the year 1876. Norfolk, Fernandina, Saint Augustine. Average number ship's company, 31 —; total sick days, 165.

Diseases.	Remaining.	Admitted.	Discharged.	Discharged from service.	Transferred.	Died.	Remaining.
Miasmatic		4	4				
Enthetic		4	4				
Dietic		1	1				
Diathetic		1	1				
Developmental							
Tubercular							
Parasitic							
Of the nervous system		1	1				
eye							
ear							
teeth							
circulatory system							
respiratory system		2	2				
digestive system		3	2				1
urinary and genital system							
locomotive system							
integumentary system	1	1	1		1		
Non-malignant tumors and cysts							
Wounds, injuries, and accidents		3	3				
Total	1	20	19		1		1

Blake. Coast Survey.

[For 274 days of the year 1876 (1st, 2d, and 3d quarters). New Orleans, La. Average number of ship's company, 46; total sick, days 358.]

Diseases.	Remaining.	Admitted.	Discharged.	Discharged from service.	Transferred.	Died.	Remaining.
Miasmatic	3	11	13				1
Enthetic		12	12				
Dietic		1	1				
Diathetic		3	3				
Developmental							
Tubercular							
Parasitic							
Of the nervous system							
eye		2	2				
ear							
teeth		2	2				
circulatory system		1	1				
respiratory system		6	5		1		
digestive system		22	21	1			
urinary and genital system		4	4				
locomotive system							
integumentary system		8	8				
Non-malignant tumors and cysts							
Wounds, injuries, and accidents		5	5				
Total	3	77	77	1	1		1

Congress, 2d rate. Screw; wood; 2,000 tons.

[Employed during the year 1876, 182 days (1st and 2d quarters), on the Home station. Average crew for that period, 294; total sick days, 849, grouped under the following diseases.]

Diseases.	Remaining.	Admitted.	Discharged.	Discharged from service.	Transferred.	Died.	Remaining.
Miasmatic							
Enthetic		5	3		2		
Dietic		1	1				
Diathetic		5	2		3		
Developmental		1			1		
Tubercular							
Parasitic							
Of the nervous system	3				3		
eye		3	1		2		
ear							
teeth							
circumlatory system		3	1	1	1		
respiratory system	1				1		
digestive system		7	5		2		
urinary and genital system	1	9	4	1	5		
locomotive system							
integumentary system	2	3	4		1		
Non-malignant tumors and cysts							
Wounds, injuries, and accidents	1	22	18	4	1		
Total	8	59	39	6	22		

Constellation, 3d rate. Sails; wood; 1,236 tons.

[Employed for 124 days of the year 1876 on the Home station (39 days 2d quarter, 85 days in 2d quarter), as practice-ship. Average number of ship's company for that period, 328; total sick days, 307, under the following diseases:]

Diseases.	Remaining.	Admitted.	Discharged.	Discharged from service.	Transferred.	Died.	Remaining.
Miasmatic		2	2				
Enthetic		6	3		3		
Dietic		1	1				
Diathetic		2			2		
Developmental							
Tubercular							
Parasitic							
Of the nervous system		2	1		1		
eye		1			1		
ear							
teeth							
circulatory system							
respiratory system							
digestive system		1	1				
urinary and genital system							
locomotive system							
integumentary system		10	9		1		
Non-malignant tumors and cysts							
Wounds, injuries, and accidents		16	15		1		
Total		41	32		9		

Catskill, 4th rate. Screw; iron-clad; 496 tons.

[Employed at Port Royal, S. C., on the Home station for 182 days of the year 1876 (1st and 2d quarters). Average number of ship's company for that period, 63+, with a total number of sick days, 157, grouped under the following diseases:]

Diseases.	Remaining.	Admitted.	Discharged.	Discharged from service.	Transferred.	Died.	Remaining.
Miasmatic							
Enthetic		1			1		
Dietic		1	1				
Diathetic		4	3				1
Developmental							
Tubercular							
Parasitic							
Of the nervous system							
eye							
ear							
teeth							
circulatory system							
respiratory system		8	7	1			
digestive system		5	5				
urinary and genital system							
locomotive system							
integumentary system							
Non-malignant tumors and cysts							
Wounds, injuries, and accidents		4	3	1			
Total		23	19	2	1		1

Canonicus, 4th rate. Iron-clad; screw; 550 tons.

[Employed during the year 1876 at New Orleans, La., on the Home station. Average number of ship's company, 72; total sick days, 699, under the following diseases:]

Diseases.	Remaining.	Admitted.	Discharged.	Discharged from service.	Transferred.	Died.	Remaining.
Miasmatic		14	14				
Enthetic		12	12				
Dietic		1	1				
Diathetic		5	5				
Developmental							
Tubercular							
Parasitic							
Of the nervous system		6	4		1	1	
eye							
ear							
teeth							
circulatory system							
respiratory system		4	3			1	
digestive system		8	8				
urinary and genital system							
locomotive system							
integumentary system		6	6				
Non-malignant tumors and cysts							
Wounds, injuries, and accidents	1	10	9		1		1
Total	1	66	62		2	2	1

Dictator, 2d rate. Iron-clad; screw; 1,750 tons.

[Employed during the year 1876 at Port Royal, S. C., on the Home station. Average number of ship's company, 104+; total sick days, 810, under the following diseases:]

Diseases.	Remaining.	Admitted.	Discharged.	Discharged from service.	Transferred.	Died.	Remaining.
Miasmatic	1	8	9				
Enthetic		1	1				
Dietic							
Diathetic		4	4				
Developmental							
Tubercular							
Parasitic							
Of the nervous system		5	3				2
eye		1	1				
ear		3	3				
teeth							
circulatory system		4	4				
respiratory system		7	7				
digestive system		8	7	1			
urinary and genital system		3	3				
locomotive system							
integumentary system	1	16	17				
Non-malignant tumors and cysts		1			1		
Wounds, injuries, and accidents		9	9				
Total	2	70	68	1	1		2

Despatch, 4th rate. Screw; wood; 730 tons.

[Employed on special service on the Home station during the year 1876. Average number of ship's company, 46 −; total sick days, 344, under the following diseases:]

Diseases.	Remaining.	Admitted.	Discharged.	Discharged from service.	Transferred.	Died.	Remaining.
Miasmatic		6	6				
Enthetic		3	2		1		
Dietic							
Diathetic		1			1		
Developmental							
Tubercular							
Parasitic							
Of the nervous system		2	2				
eye		3	3				
ear							
teeth							
circulatory system		1	1				
respiratory system							
digestive system		9	8		1		
urinary and genital system							
locomotive system		3	3				
integumentary system		2	2				
Non-malignant tumors and cysts							
Wounds, injuries, and accidents		2	1		1		
Total		32	28		4		

Essex, 3d rate. Screw; wood; 615 *tons.*

[Employed for 91 days (1st quarter 1876) of the year 1876 at Hampton Roads, Va., on the Home station. Average number of ship's company for that period, 207; total sick days, 226, under the following diseases:]

Diseases.	Remaining.	Admitted.	Discharged.	Discharged from service.	Transferred.	Died.	Remaining.
Miasmatic		2	2				
Enthetic		2			1		1
Dietic		1	1				
Diathetic		1	1				
Developmental							
Tubercular							
Parasitic							
Of the nervous system		1					1
eye							
ear							
teeth							
circulatory system							
respiratory system		2			2		
digestive system		4	4				
urinary and genital system							
locomotive system		2	1				1
integumentary system		2	2				
Non-malignant tumors and cysts							
Wounds, injuries, and accidents		13	12		1		
Total		30	23		4		3

Franklin, 1st rate. Screw; wood; 3,173 *tons.*

[Employed during the year 1876 on the European station. Average number of ship's company for the period 566; total sick days 5,462, under the following diseases:]

Diseases.	Remaining.	Admitted.	Discharged.	Discharged from service.	Transferred.	Died.	Remaining.
Miasmatic	1	80	81				
Enthetic	2	40	38	1	3		
Dietic		2	2				
Diathetic	2	32	33		1		
Developmental							
Tubercular							
Parasitic							
Of the nervous system	2	13	11	1	2		1
eye		7	7				
ear							
teeth							
circulatory system		6	6				
respiratory system	5	39	38		4	2	
digestive system	1	84	84				1
urinary and genital system		10	9		1		
locomotive system		2	2				
integumentary system	3	75	75		1	1	1
Non-malignant tumors and cysts							
Wounds, injuries, and accidents	6	132	136				2
Total	22	522	522	2	12	3	5

Frolic, 4th rate. Paddle-wheel; iron; 614 *tons.*

[Was employed in the Rio de la Plata for 182 days of the year 1876 (1st and 2d quarters), on the South Atlantic squadron. Average number of ship's company for that period, 108; total sick days, 644, under the following diseases:]

Diseases.	Remaining.	Admitted.	Discharged.	Discharged from service.	Transferred.	Died.	Remaining.
Miasmatic		2	2				
Enthetic		6	6				
Dietic							
Diathetic	1	7	6		1		1
Developmental							
Tubercular							
Parasitic							
Of the nervous system		4	3		1		
eye							
ear		1	1				
teeth							
circulatory system		2	1		1		
respiratory system		4			4		
digestive system		11	8	1	1		1
urinary and genital system		3	2		1		
locomotive system							
integumentary system		1	1				
Non-malignant tumors and cysts							
Wounds, injuries, and accidents		7	7				
Total	1	48	37	1	9		2

Gettysburg, 4th rate. Paddle-wheel; iron; 518 *tons.*

[For 274 days of the year 1876 (1st, 2d, and 4th quarters), was employed on the Home station and *en route* to the European station, and on that station. Average number of ship's company for that period, 73; total sick days, 759, under the following diseases:]

Diseases.	Remaining.	Admitted.	Discharged.	Discharged from service.	Transferred.	Died.	Remaining.
Miasmatic		6	6				
Enthetic	1	5	5		1		
Dietic							
Diathetic		5	2		1		2
Developmental							
Tubercular							
Parasitic		1	1				
Of the nervous system		7	6		1		
eye		1	1				
ear							
teeth							
circulatory system							
respiratory system		5	5				
digestive system		19	17		2		
urinary and genital system		1	1				
locomotive system							
integumentary system		6	5				1
Non-malignant tumors and cysts							
Wounds, injuries, and accidents		19	19				
Total	1	75	68		5		3

Gedney. Coast Survey steamer.

[For the year 1876. Average number ship's company, 34; total sick days, 45.]

Diseases.	Remaining.	Admitted.	Discharged.	Discharged from service.	Transferred.	Died.	Remaining.
Miasmatic		6	6				
Enthetic		1	1				
Dietic							
Diathetic		2	2				
Developmental							
Tubercular							
Parasitic							
Of the nervous system							
eye							
ear							
teeth							
circulatory system							
respiratory system		2	2				
digestive system		3	3				
urinary and genital system							
locomotive system							
integumentary system		1	1				
Non-malignant tumors and cysts							
Wounds, injuries, and accidents		2	2				
Total		17	17				

Hartford, 2d rate. Screw; wood; 2,000 tons.

[Employed during the year 1876 on the Home station. The average number of the ship's company was 331; total sick days, 2,836, under the following diseases:]

Diseases.	Remaining.	Admitted.	Discharged.	Discharged from service.	Transferred.	Died.	Remaining.
Miasmatic	1	51	38		14		
Enthetic		18	8		9		1
Dietic		2	2				
Diathetic		38	25	5	8		
Developmental							
Tubercular							
Parasitic		1	1				
Of the nervous system		22	14	2	4	1	1
eye		6	5		1		
ear		2	2				
teeth							
circulatory system		7	5		2		
respiratory system	1	20	17		3		1
digestive system		31	24		6		1
urinary and genital system		6	3		3		
locomotive system		3	1		2		
integumentary system		38	34	3			1
Non-malignant tumors and cysts		1			1		
Wounds, injuries, and accidents	2	59	52	1	8		
Total	4	305	231	11	61	1	5

Huron, 3d rate. Screw; iron; 541 *tons.*

[Employed during the year 1876 on the Home station. The average number of the ship's company was 132; total sick days, 832, under the following diseases:]

Diseases.	Remaining.	Admitted.	Discharged.	Discharged from service.	Transferred.	Died.	Remaining.
Miasmatic	1	10	10		1		
Enthetic		10	10				
Dietic		1	1				
Diathetic		9	7		2		
Developmental		1			1		
Tubercular							
Parasitic							
Of the nervous system		4	4				
eye							
ear							
teeth							
circulatory system							
respiratory system		10	10				
digestive system		21	20		1		
urinary and genital system		2	2				
locomotive system							
integumentary system		14	12		2		
Non-malignant tumors and cysts							
Wounds, injuries, and accidents		19	16		1		2
Total	1	101	92		8		2

Intrepid, 4th rate. Torpedo-boat; screw; iron; 438 *tons.*

[Employed for 182 days of the year 1876 on the Home station (1st and 2d quarters). The average number of the ship's company for that period was 52. Total sick days, 194, grouped under the following diseases:]

Diseases.	Remaining.	Admitted.	Discharged.	Discharged from service.	Transferred.	Died.	Remaining.
Miasmatic							
Enthetic		3	3				
Dietic		1	1				
Diathetic		3	3				
Developmental							
Tubercular							
Parasitic							
Of the nervous system		1	1				
eye		1					1
ear							
teeth							
circulatory system		1	1				
respiratory system		3	3				
digestive system		7	7				
urinary and genital system		2	2				
locomotive system							
integumentary system		3	3				
Non-malignant tumors and cysts							
Wounds, injuries, and accidents		8	8				
Total		33	32				1

Juniata, 3d rate. Screw; wood; 828 *tons.*

[For 249 days of the year 1876 (1st and 2d quarters, and 67 days of 3d quarter) was employed on the Home station. The average number of ship's company for that period was 192, with 1,492 sick days, grouped under the following diseases:]

Diseases.	Remaining.	Admitted.	Discharged.	Discharged from service.	Transferred.	Died.	Remaining.
Miasmatic		7	6			1	
Enthetic		12	12				
Dietic		1	1				
Diathetic		21	20		1		
Developmental							
Tubercular							
Parasitic							
Of the nervous system		8	8				
eye		2	1		1		
ear		1			1		
teeth							
circulatory system							
respiratory system		42	41		1		
digestive system		32	32				
urinary and genital system		1	1				
locomotive system		1			1		
integumentary system		17	17				
Non-malignant tumors and cysts							
Wounds, injuries, and accidents		45	43		1	1	
Total		190	182		6	2	

Kearsarge, 3d rate. Screw; wood; 695 *tons.*

[Employed in the year 1876 on the Asiatic station. Average number of ship's company for that period, 181. Total sick days, 2,219, under the following diseases:]

Diseases.	Remaining.	Admitted.	Discharged.	Discharged from service.	Transferred.	Died.	Remaining.
Miasmatic	1	43	41		2	1	
Enthetic	1	40	35		3		3
Dietic		8	7		1		
Diathetic		4	4				
Developmental							
Tubercular							
Parasitic							
Of the nervous system		10	9		1		
eye	1	1	2				
ear							
teeth							
circulatory system		1			1		
respiratory system		14	6		8		
digestive system	1	90	91				
urinary and genital system	1	5	4				2
locomotive system		1	1				
integumentary system	2	45	45				2
Non-malignant tumors and cysts							
Wounds, injuries, and accidents	2	44	45				1
Total	9	306	290		16	1	8

Lackawanna, 2d rate. Screw; wood; 1,026 tons.

[Employed during the year 1876 on the North Pacific station. Average ship's company for that period, 214; total sick days, 1,870, grouped under the following diseases:]

Diseases.	Remaining.	Admitted.	Discharged.	Discharged from service.	Transferred.	Died.	Remaining.
Miasmatic		12	12				
Enthetic		13	11				2
Dietic		2	1				1
Diathetic		9	7		2		
Developmental							
Tubercular							
Parasitic							
Of the nervous system		8	8				
eye		1	1				
ear							
teeth							
circulatory system							
respiratory system		18	13	1	1	1	2
digestive system		3	3				
urinary and genital system		5	5				
locomotive system							
integumentary system		8	8				
Non-malignant tumors and cysts							
Wounds, injuries, and accidents	1	25	23			1	2
Total	1	104	92	1	3	2	7

Lehigh, 4th rate. Screw; iron-clad; 496 tons.

[Employed for 116 days of the year 1876 (66 days 1st quarter, 91 days 2d quarter, 11 days 3d quarter) at Norfolk, Va., on the Home station. Average number of crew for that period, 65; total sick days, 102, grouped under the following diseases:]

Diseases.	Remaining.	Admitted.	Discharged.	Discharged from service.	Transferred.	Died.	Remaining.
Miasmatic		1	1				
Enthetic		1			1		
Dietic							
Diathetic		1	1				
Developmental							
Tubercular							
Parasitic							
Of the nervous system		1			1		
eye							
ear							
teeth							
circulatory system							
respiratory system		2	2				
digestive system		1			1		
urinary and genital system							
locomotive system							
integumentary system		1	1				
Non-malignant tumors and cysts							
Wounds, injuries, and accidents		3	2				1
Total		11	7		3		1

Minnesota, 1st rate. Screw; wood; 3,000 tons.

[Employed during the year 1876 at New York, N. Y., on the Home station. Average number of ship's company, 388: total sick days, 1,244, grouped under the following diseases. This vessel is used as a training-ship.]

Diseases.	Remaining.	Admitted.	Discharged.	Discharged from service.	Transferred.	Died.	Remaining.
Miasmatic		8	5		3		
Enthetic	1	10	8		2		1
Dietic		1	1				
Diathetic		22	12		9		1
Developmental							
Tubercular							
Parasitic							
Of the nervous system		5	2	1	2		
eye		9	8	1			
ear							
teeth							
circulatory system							
respiratory system	1	10	8		3		
digestive system		17	16		1		
urinary and genital system		3	2		1		
locomotive system	1	1	1		1		
integumentary system		21	19				2
Non-malignant tumors and cysts							
Wounds, injuries, and accidents		32	28		2	1	1
Total	3	139	110	2	24	1	5

Monongahela, 2d rate. Screw; wood; 960 tons.

[Employed for 311 days of the year 1876 on the Home station. The average number of the ship's company for that period was 215; total sick days, 1,570, grouped under the following diseases:]

Diseases.	Remaining.	Admitted.	Discharged.	Discharged from service.	Transferred.	Died.	Remaining.
Miasmatic		85	84				1
Enthetic	1	10	8		2		1
Dietic		8	7				1
Diathetic	1	17	16		2		
Developmental							
Tubercular							
Parasitic							
Of the nervous system		2	2				
eye		2	2				
ear		2	2				
teeth							
circulatory system	1	2	2		1		
respiratory system	2	24	24		2		
digestive system		30	30				
urinary and genital system	1				1		
locomotive system							
integumentary system	1	16	16		1		
Non-malignant tumors and cysts							
Wounds, injuries, and accidents	3	35	35		2		1
Total	10	233	228		11		4

Monocacy, 3d rate. Paddle; iron; 746 tons.

[Employed during the year 1876 on the Asiatic station. Average number of ship's company for that time, 126; total sick days, 1,114, under the following diseases:]

Diseases.	Remaining.	Admitted.	Discharged.	Discharged from service.	Transferred.	Died.	Remaining.
Miasmatic		4	4				
Enthetic	1	13	13	1			
Dietic		1				1	
Diathetic		3	1		1		1
Developmental							
Tubercular							
Parasitic							
Of the nervous system		7	7				
eye							
ear		5	5				
teeth							
circulatory system							
respiratory system		3	3				
digestive system	2	8	9			1	
urinary and genital system		7	7				
locomotive system							
integumentary system		8	6		1		1
Non-malignant tumors and cysts							
Wounds, injuries, and accidents		8	8				
Total	3	67	63	1	2	2	2

Michigan, 3d rate. Paddle; iron; 450 tons.

[Employed during the year 1876 on the Lakes. Average number of ship's company, 107; total sick days, 876, under the following diseases:]

Diseases.	Remaining.	Admitted.	Discharged.	Discharged from service.	Transferred.	Died.	Remaining.
Miasmatic		2	2				
Enthetic							
Dietic		5	5				
Diathetic		6	6				
Developmental							
Tubercular							
Parasitic							
Of the nervous system		5	5				
eye		2	2				
ear							
teeth		1	1				
circulatory system		1	1				
respiratory system		27	23	3		1	
digestive system	1	35	35	1			
urinary and genital system	1	1	2				
locomotive system		3	2	1			
integumentary system		8	8				
Non-malignant tumors and cysts							
Wounds, injuries, and accidents	1	18	17	1		1	
Total	3	114	109	6		2	

Marion, 3d rate. Screw; wood; 910 tons.

[Employed for 355 days of the year 1876, *en route* to the European station. The average number of the ship's company for that period was 250; total sick days, 2,546, under the following diseases:]

Diseases.	Remaining.	Admitted.	Discharged.	Discharged from service.	Transferred	Died.	Remaining.
Miasmatic		16	16				
Enthetic		17	15				2
Dietic							
Diathetic		36	36				
Developmental							
Tubercular							
Parasitic							
Of the nervous system		9	7		2		
eye		5	5				
ear		3	3				
teeth							
circulatory system		1	1				
respiratory system		41	40		1		
digestive system		53	52		1		
urinary and genital system		16	10		6		
locomotive system		1	1				
integumentary system		61	59				2
Non-malignant tumors and cysts		1	1				
Wounds, injuries, and accidents		85	82		1		2
Total		345	328		11		6

Montauk, 4th rate. Screw; iron-clad; 496 tons.

[Employed for 157 days (1st and 2d quarters, 1876), of the year 1876 at Norfolk, Va., on the Home station. Average number of ship's company, 66; total sick days, 41, presented by the following diseases:]

Diseases.	Remaining.	Admitted.	Discharged.	Discharged from service.	Transferred.	Died.	Remaining.
Miasmatic		3	2		1		
Enthetic		1			1		
Dietic							
Diathetic		2			2		
Developmental							
Tubercular							
Parasitic							
Of the nervous system							
eye							
ear							
teeth							
circulatory system							
respiratory system		1			1		
digestive system		1			1		
urinary and genital system							
locomotive system							
integumentary system							
Non-malignant tumors and cysts							
Wounds, injuries, and accidents		1	1				
Total		9	3		6		

Manhattan, 4th rate. Screw; iron-clad; 550 tons.

[For 182 days (1st and 2d quarters, 1876) of the year was employed at Pensacola, Fla., on the Home station. Average ship's company for the period, 63, with 114 sick days, under the following diseases:]

Diseases.	Remaining.	Admitted.	Discharged.	Discharged from service.	Transferred.	Died.	Remaining.
Miasmatic		2	2				
Enthetic							
Dietic							
Diathetic		8	7		1		
Developmental							
Tubercular							
Parasitic							
Of the nervous system		1	1				
eye							
ear							
teeth							
circulatory system							
respiratory system		7	6		1		
digestive system		2	1		1		
urinary and genital system							
locomotive system							
integumentary system		1	1				
Non-malignant tumors and cysts							
Wounds, injuries, and accidents		3	1				2
Total		24	19		3		2

Mahopac, 4th rate. Screw; iron-clad; 550 tons.

[Employed for 91 days (1st quarter) of the year 1876, at Port Royal, S. C., on the Home station. Average number of ship's company, 57; total sick days, 149, under the following diseases:]

Diseases.	Remaining.	Admitted.	Discharged.	Discharged from service.	Transferred.	Died.	Remaining.
Miasmatic		3	3				
Enthetic							
Dietic							
Diathetic		1	1				
Developmental							
Tubercular							
Parasitic							
Of the nervous system	1	2	3				
eye	1		1				
ear							
teeth							
circulatory system							
respiratory system		2	2				
digestive system		4	4				
urinary and genital system							
locomotive system							
Integumentary system	1	6	6	1			
Non-malignant tumors and cysts							
Wounds, injuries, and accidents		3	3				
Total	3	21	23	1			

Nantucket, 4th rate. Screw; iron-clad; 496 tons.

[Was employed for 64 days in the year 1876 on the Home station, at Norfolk, Va. The average ship's company for that period was 70; total sick days, 87, under the following diseases:]

Diseases.	Remaining.	Admitted.	Discharged.	Discharged from service.	Transferred.	Died.	Remaining.
Miasmatic		2	2				
Enthetic		1	1				
Dietic							
Diathetic		1	1				
Developmental							
Tubercular							
Parasitic							
Of the nervous system		2	2				
eye		1	1				
ear							
teeth							
circulatory system							
respiratory system		1	1				
digestive system							
urinary and genital system		1			1		
locomotive system							
integumentary system		3	3				
Non-malignant tumors and cysts							
Wounds, injuries, and accidents		4	4				
Total		16	15		1		

New Hampshire, 2d rate. Sails; wood; 2,600 tons.

[For 275 days of the year 1876 was employed on the Home station, at Port Royal, S. C. The average ship's company for that period was 114+; total sick days, 497, with the following diseases:]

Diseases.	Remaining.	Admitted.	Discharged.	Discharged from service.	Transferred.	Died.	Remaining.
Miasmatic		8	8				
Enthetic		2	2				
Dietic		1	1				
Diathetic		9	8	1			
Developmental							
Tubercular							
Parasitic							
Of the nervous system		2	1				1
eye		1			1		
ear							
teeth							
circulatory system		1			1		
respiratory system		3	3				
digestive system		9	9				
urinary and genital system		1			1		
locomotive system							
integumentary system							
Non-malignant tumors and cysts							
Wounds, injuries, and accidents		3	3				
Total		40	35	1	3		1

Onward, 4th rate. Sails; wood; 804 tons.

[Employed as the store-ship of the South Pacific squadron during the year 1876, at Callao, Peru. Average ship's company, 52+; total sick days, 397, under the following diseases:]

Diseases.	Remaining.	Admitted.	Discharged.	Discharged from service.	Transferred.	Died.	Remaining.
Miasmatic		8	8				
Enthetic		1	1				
Dietic							
Diathetic	1	2	3				
Developmental							
Tubercular							
Parasitic							
Of the nervous system		4	3		1		
eye							
ear							
teeth							
circulatory system		2	2				
respiratory system		1					1
digestive system	1	4	4				1
urinary and genital system		2	2				
locomotive system		1			1		
integumentary system		7	7				
Non-malignant tumors and cysts							
Wounds, injuries, and accidents	2	8	9			1	
Total	4	40	39		2	1	2

Omaha, 2d rate. Screw; wood; 1,122 tons.

[Was employed during the year 1876 on the South Pacific station. Average number of ship's company, 226; total sick days, 4,113, grouped under the following diseases:]

Diseases.	Remaining.	Admitted.	Discharged.	Discharged from service.	Transferred.	Died.	Remaining.
Miasmatic	2	55	55				2
Enthetic	4	63	62		1		4
Dietic		14	14				
Diathetic	3	37	38		2		
Developmental							
Tubercular							
Parasitic							
Of the nervous system		6	6				
eye		1	1				
ear							
teeth							
circulatory system		4	2		2		
respiratory system		28	27		1		
digestive system	1	67	64		2	1	1
urinary and genital system	1	12	11		1		1
locomotive system		1	1				
integumentary system	2	26	28				
Non-malignant tumors and cysts							
Wounds, injuries, and accidents	2	55	56		1		
Total	15	369	365		10	1	8

Ossipee, 3d rate. Screw; wood; 828 tons.

[Was employed on the Home station during the year 1876. The average number of the ship's company was 194+, with a total of 1,018 sick days for the 2d, 3d, and 4th quarters, under the following diseases:]

Diseases.	Remaining.	Admitted.	Discharged.	Discharged from service.	Transferred.	Died.	Remaining.
Miasmatic		9	9				
Enthetic	2	6	5		1		2
Dietic							
Diathetic		10	7	1	1		1
Developmental							
Tubercular							
Parasitic							
Of the nervous system		15	14		1		
eye		2	2				
ear		2	1		1		
teeth		1	1				
circulatory system		6	4		2		
respiratory system	1	40	31		9	1	
digestive system	2	39	38		2		1
urinary and genital system		5	4				1
locomotive system		2	2				
integumentary system		18	16		2		
Non-malignant tumors and cysts							
Wounds, injuries, and accidents		37	37				
Total	5	192	171	1	19	1	5

Powhatan, 2d rate. Paddle-wheel; wood; 2,182 tons.

Was employed during the year 1876 on the Home station. Average number of ship's company for that period, 225; total sick days, 2,688, under the following diseases:]

Diseases.	Remaining.	Admitted.	Discharged.	Discharged from service.	Transferred.	Died.	Remaining.
Miasmatic		26	25		1		
Enthetic	2	22	19	2	1		2
Dietic		3	3				
Diathetic	2	15	12		4		1
Developmental							
Tubercular							
Parasitic							
Of the nervous system		3	3				
eye		4	2	1	1		
ear		2	2				
teeth							
circulatory system		3	1		2		
respiratory system	1	26	19		6		2
digestive system		22	21		1		
urinary and genital system		5	4		1		
locomotive system							
integumentary system	1	26	19		7		1
Non-malignant tumors and cysts							
Wounds, injuries, and accidents	1	43	41	2	1		
Total	7	200	171	5	25		6

Plymouth, 2d rate. Screw; wood; 1,122 tons.

[Employed during the year 1876 on the Home station. The average ship's company for that period was 239; total sick days, 1,505, under the following diseases:]

Diseases.	Remaining.	Admitted.	Discharged.	Discharged from service.	Transferred.	Died.	Remaining.
Miasmatic		14	9		4		1
Enthetic	2	12	10		4		
Dietic		5	5				
Diathetic	2	24	19	2	4		1
Developmental							
Tubercular							
Parasitic							
Of the nervous system	1	14	9	2	4		
eye		4	3		1		
ear		3			3		
teeth							
circulatory system		2			2		
respiratory system		27	23		3	1	
digestive system		23	19	1	2	1	
urinary and genital system	1	5	3		3		
locomotive system		3	2		1		
integumentary system	3	23	24		2		
Non-malignant tumors and cysts		1			1		
Wounds, injuries, and accidents		33	24		6	2	1
Total	9	193	150	5	40	4	3

Portsmouth, 3d rate, 2d class. Sails; wood; 846 tons.

[For 272 days of 1876 (1st, 2d, and 3d quarters) employed on the Pacific station. Average number of ship's company, 123; total sick days, 941, presented by the following diseases:]

Diseases.	Remaining.	Admitted.	Discharged.	Discharged from service.	Transferred.	Died.	Remaining.
Miasmatic							
Enthetic		3	3				
Dietic		1	1				
Diathetic		9	6		1		
Developmental		2			2		
Tubercular							
Parasitic							
Of the nervous system		8	6		2		
eye							
ear							
teeth							
circulatory system		5	1	1	3		
respiratory system	6	41	45		2		
digestive system		15	15				
urinary and genital system		2	2				
locomotive system							
integumentary system		11	11				
Non-malignant tumors and cysts							
Wounds, injuries, and accidents		38	35		2		1
Total	6	135	127	1	12		1

Palos, 4th rate. Screw; iron; 306 tons.

[Employed during the year 1876 on the Asiatic station. The average number of the ship's company for that period was 50, with a total number of sick days of 379, under the following diseases:]

Diseases.	Remaining.	Admitted.	Discharged.	Discharged from service.	Transferred.	Died.	Remaining.
Miasmatic		1	1				
Enthetic		1	1				
Dietic							
Diathetic		4	4				
Developmental							
Tubercular							
Parasitic							
Of the nervous system		6	5		1		
eye		1			1		
ear							
teeth							
circulatory system							
respiratory system		10	10				
digestive system		18	16		1		1
urinary and genital system		5	4	1			
locomotive system							
integumentary system		8	8				
Non-malignant tumors and cysts							
Wounds, injuries, and accidents		9	9				
Total		63	58	1	3		1

Pensacola, 2d rate. Screw; wood; 2,000 tons.

[Was employed on the Pacific station for the year 1876. The average number of the ship's company for that period was 327; total sick days, 3 551, presented under the following diseases:]

Diseases.	Remaining.	Admitted.	Discharged.	Discharged from service.	Transferred.	Died.	Remaining.
Miasmatic		35	32		1		2
Enthetic	1	19	18		2		
Dietic		27	26		1		
Diathetic	1	40	36		3		2
Developmental							
Tubercular		1	1				
Parasitic							
Of the nervous system		55	49		6		
eye		6	5		1		
ear		1	1				
teeth							
circulatory system		3	1		2		
respiratory system	2	36	27	6	4		1
digestive system		71	68		3		
urinary and genital system		5	5				
locomotive system		1	1				
integumentary system	2	65	66		1		
Non-malignant tumors and cysts							
Wounds, injuries, and accidents	4	104	87	20	1		
Total	10	469	423	26	25		5

Passaic, 4th rate. Screw; iron-clad; 496 tons.

[Employed at Norfolk, Va., for 182 days of the year 1876. Average number of ship's company for that period, 70; total sick days, 82, with the following diseases:]

Diseases.	Remaining.	Admitted.	Discharged.	Discharged from service.	Transferred.	Died.	Remaining.
Miasmatic		3	2		1		
Enthetic		3	2		1		
Dietic							
Diathetic		2	1		1		
Developmental							
Tubercular							
Parasitic							
Of the nervous system							
eye							
ear							
teeth							
circulatory system							
respiratory system		2			2		
digestive system		1	1				
urinary and genital system							
locomotive system							
integumentary system		1				1	
Non-malignant tumors and cysts							
Wounds, injuries, and accidents		2	2				
Total		14	8		5	1	

Passaic, 4th rate. Screw; iron-clad; 496 tons. Montauk, 4th rate. Screw; iron-clad, 496 tons. Wyandotte, 4th rate. Screw; iron-clad; 550 tons.

[Were employed for 184 days of 1876 at Norfolk, Va., on the Home station. The average crew of the 3 vessels was 85, with a total of 104 sick days, under the following diseases:]

Diseases.	Remaining.	Admitted.	Discharged.	Discharged from service.	Transferred.	Died.	Remaining.
Miasmatic		6	3		3		
Enthetic		1	1				
Dietic							
Diathetic		4	1		3		
Developmental							
Tubercular							
Parasitic							
Of the nervous system		3	3				
eye							
ear							
teeth							
circulatory system							
respiratory system							
digestive system		2	1		1		
urinary and genital system		2	2				
locomotive system							
integumentary system							
Non-malignant tumors and cysts							
Wounds, injuries, and accidents		1	1				
Total		19	12		7		

Pinta, 4th rate. Screw-tug; 306 tons.

[From the reports was employed for 91 days of the year 1876 at Norfolk, Va., on the Home station. The average crew was 30, with a total of 46 sick days, with the following diseases:]

Diseases.	Remaining.	Admitted.	Discharged.	Discharged from service.	Transferred.	Died.	Remaining.
Miasmatic		1	1				
Enthetic		1	1				
Dietic							
Diathetic		3	3				
Developmental							
Tubercular							
Parasitic							
Of the nervous system							
eye							
ear							
teeth							
circulatory system							
respiratory system		3	3				
digestive system							
urinary and genital system							
locomotive system							
integumentary system							
Non-malignant tumors and cysts							
Wounds, injuries, and accidents		2	2				
Total		10	10				

Pawnee, 3d rate, 2d class. Sails; wood; 872 tons.

[From the reports has been employed for 91 days of the year 1876 on the Home station as store-ship at Port Royal, S.C. The average crew was 42, with a total of 256 sick days, under the following diseases:]

Diseases.	Remaining.	Admitted.	Discharged.	Discharged from service.	Transferred.	Died.	Remaining.
Miasmatic							
Enthetic							
Dietic							
Diathetic		1			1		
Developmental							
Tubercular							
Parasitic							
Of the nervous system							
eye		2	2				
ear							
teeth							
circulatory system							
respiratory system							
digestive system		2			1		1
urinary and genital system							
locomotive system		1			1		
integumentary system		4	3				1
Non-malignant tumors and cysts							
Wounds, injuries, and accidents	1	2	1	1			1
Total	1	12	6	1	3		3

Richmond, 2d rate. Screw; wood; 2,000 tons.

[For the year 1876 was employed on the Pacific station and on her way home. The average number of the ship's company for that period was 427, with a total of 3,913 sick days, presented under the following diseases:]

Diseases.	Remaining.	Admitted.	Discharged.	Discharged from service.	Transferred.	Died.	Remaining.
Miasmatic	1	26	25	.....	1	.....	1
Enthetic	.....	51	47	.....	1	.....	3
Dietic	.....	3	3	.....	.....	.....	.....
Diathetic	.....	4	4	.....	.....	.....	.....
Developmental	.....	.....	.....	.....	.....	.....	.....
Tubercular	.....	.....	.....	.....	.....	.....	.....
Parasitic	.....	1	1	.....	.....	.....	.....
Of the nervous system	.....	2	1	.....	.....	.....	1
eye	.....	8	7	.....	.....	1	.....
ear	.....	.....	.....	.....	.....	.....	.....
teeth	.....	.....	.....	.....	.....	.....	.....
circulatory system	.....	2	.....	.....	1	1	.....
respiratory system	1	12	11	.....	1	.....	1
digestive system	2	33	32	.....	1	.....	2
urinary and genital system	.....	5	4	.....	1	.....	.....
locomotive system	.....	.....	.....	.....	.....	.....	.....
integumentary system	.....	57	55	.....	.....	.....	2
Non-malignant tumors and cysts	.....	.....	.....	.....	.....	.....	.....
Wounds, injuries, and accidents	2	56	55	.....	.....	.....	3
Total	6	260	245	.....	6	2	13

Rio Bravo, 4th rate. Paddle-wheel; 325 tons.

[For the year 1876, was employed on the Home station, in the Gulf of Mexico, off Brownsville, Tex., and Matamoras, Mexico. The average ship's company for the year was 49, with a total of 931 sick days, under the following diseases:]

Diseases.	Remaining.	Admitted.	Discharged.	Discharged from service.	Transferred.	Died.	Remaining.
Miasmatic	.....	7	7	.....	.....	.....	.....
Enthetic	1	6	7	.....	.....	.....	.....
Dietic	.....	.....	.....	.....	.....	.....	.....
Diathetic	.....	5	5	.....	.....	.....	.....
Developmental	.....	.....	.....	.....	.....	.....	.....
Tubercular	.....	.....	.....	.....	.....	.....	.....
Parasitic	.....	1	1	.....	.....	.....	.....
Of the nervous system	.....	6	6	.....	.....	.....	.....
eye	.....	1	1	.....	.....	.....	.....
ear	.....	.....	.....	.....	.....	.....	.....
teeth	.....	.....	.....	.....	.....	.....	.....
circulatory system	.....	.....	.....	.....	.....	.....	.....
respiratory system	.....	10	10	.....	.....	.....	.....
digestive system	.....	16	16	.....	.....	.....	.....
urinary and genital system	.....	4	4	.....	.....	.....	.....
locomotive system	.....	.....	.....	.....	.....	.....	.....
integumentary system	.....	4	4	.....	.....	.....	.....
Non-malignant tumors and cysts	.....	1	1	.....	.....	.....	.....
Wounds, injuries, and accidents	.....	15	15	.....	.....	.....	.....
Total	1	76	77	.....	.....	.....	.....

Ranger, 3d rate. Screw; iron; 541 tons.

[On the Home station, and on the way to the Asiatic station. Average number of crew, 136; with a total of 4 sick-days presenting the following diseases:]

Diseases.	Remaining.	Admitted.	Discharged.	Discharged from service.	Transferred.	Died.	Remaining.
Miasmatic	.....	.....	.....	.....	.....	.....	.....
Enthetic	.....	.....	.....	.....	.....	.....	.....
Dietic	.....	.....	.....	.....	.....	.....	.....
Diathetic	.....	.....	.....	.....	.....	.....	.....
Developmental	.....	.....	.....	.....	.....	.....	.....
Tubercular	.....	.....	.....	.....	.....	.....	.....
Parasitic	.....	.....	.....	.....	.....	.....	.....
Of the nervous system	.....	.....	.....	.....	.....	.....	.....
eye	.....	.....	.....	.....	.....	.....	.....
ear	.....	.....	.....	.....	.....	.....	.....
teeth	.....	.....	.....	.....	.....	.....	.....
circulatory system	.....	.....	.....	.....	.....	.....	.....
respiratory system	.....	1	1	.....	.....	.....	.....
digestive system	.....	1	1	.....	.....	.....	.....
urinary and genital system	.....	.....	.....	.....	.....	.....	.....
locomotive system	.....	.....	.....	.....	.....	.....	.....
integumentary system	.....	.....	.....	.....	.....	.....	.....
Non-malignant tumors and cysts	.....	.....	.....	.....	.....	.....	.....
Wounds, injuries, and accidents	.....	.....	.....	.....	.....	.....	.....
Total	.....	2	2	.....	.....	.....	.....

Saco, 3d rate. Screw; wood; 410 tons.

[For 195 days of the year 1876 was employed on the Asiatic station. The average ship's company for that period was 121, with 1,343 sick-days, with the following diseases:]

Diseases.	Remaining.	Admitted.	Discharged.	Discharged from service.	Transferred.	Died.	Remaining.
Miasmatic	.....	4	4	.....	.....	.....	.....
Enthetic	1	15	14	.....	2	.....	.....
Dietic	.....	1	1	.....	.....	.....	.....
Diathetic	2	18	13	.....	7	.....	.....
Developmental	.....	1	.....	.....	1	.....	.....
Tubercular	.....	.....	.....	.....	.....	.....	.....
Parasitic	.....	.....	.....	.....	.....	.....	.....
Of the nervous system	.....	4	1	.....	3	.....	.....
eye	.....	1	1	.....	.....	.....	.....
ear	.....	.....	.....	.....	.....	.....	.....
teeth	.....	.....	.....	.....	.....	.....	.....
circulatory system	.....	3	.....	.....	3	.....	.....
respiratory system	.....	8	5	2	1	.....	.....
digestive system	.....	6	5	1	.....	.....	.....
urinary and genital system	1	3	4	.....	.....	.....	.....
locomotive system	.....	1	.....	.....	1	.....	.....
integumentary system	1	5	6	.....	.....	.....	.....
Non-malignant tumors and cysts	.....	.....	.....	.....	.....	.....	.....
Wounds, injuries, and accidents	2	7	9	.....	.....	.....	.....
Total	7	77	63	3	18	.....	.....

Swatara, 3d rate. Screw; wood; 910 tons.

[For the year 1876 was employed on the Home station. The average ship's company for the year wa 172, with 2,218 sick-days, exhibited by the following diseases:]

Diseases.	Remaining.	Admitted.	Discharged.	Discharged from service.	Transferred.	Died.	Remaining.
Miasmatic	1	13	11	1	2	.....	.....
Enthetic	.....	8	6	.....	1	.....	1
Dietic	.....	3	3	.....	.....	.....	.....
Diathetic	2	21	19	.....	4	.....	.....
Developmental	.....	.....	.....	.....	.....	.....	.....
Tubercular	.....	.....	.....	.....	.....	.....	.....
Parasitic	.....	.....	.....	.....	.....	.....	.....
Of the nervous system	1	19	15	1	4	.....	.....
eye	.....	1	1	.....	.....	.....	.....
ear	.....	1	.....	.....	1	.....	.....
teeth	.....	.....	.....	.....	.....	.....	.....
circulatory system	1	2	.....	.....	3	.....	.....
respiratory system	.....	17	15	.....	1	.....	1
digestive system	3	42	37	1	7	.....	.....
urinary and genital system	2	2	1	.....	3	.....	.....
locomotive system	1	.....	.....	.....	1	.....	.....
integumentary system	.....	22	20	.....	1	.....	1
Non-malignant tumors and cysts	.....	.....	.....	.....	.....	.....	.....
Wounds, injuries, and accidents	.....	55	46	.....	8	.....	1
Total	11	206	174	3	36	.....	4

Saugus, 4th rate. Screw; iron-clad; 550 tons.

[For 111 days in the year 1876 was employed on the Home station. The average ship's company for that time was 61 +, with 170 sick-days, presenting the following diseases:]

Diseases.	Remaining.	Admitted.	Discharged.	Discharged from service.	Transferred.	Died.	Remaining.
Miasmatic	.....	2	2	.....	.....	.....	.....
Enthetic	.....	3	3	.....	.....	.....	.....
Dietic	.....	.....	.....	.....	.....	.....	.....
Diathetic	.....	6	5	.....	1	.....	.....
Developmental	.....	1	.....	.....	1	.....	.....
Tub rcular	.....	.....	.....	.....	.....	.....	.....
Parasitic	.....	.....	.....	.....	.....	.....	.....
Of the nervous system	.....	1	1	.....	.....	.....	.....
eye	.....	1	1	.....	.....	.....	.....
ear	.....	.....	.....	.....	.....	.....	.....
teeth	.....	.....	.....	.....	.....	.....	.....
circulatory system	.....	1	1	.....	.....	.....	.....
respiratory system	.....	7	7	.....	.....	.....	.....
digestive system	.....	2	1	.....	1	.....	.....
urinary and genital system	.....	1	.....	.....	1	.....	.....
locomotive system	.....	.....	.....	.....	.....	.....	.....
integumentary system	.....	1	1	.....	.....	.....	.....
Non-malignant tumors and cysts	.....	.....	.....	.....	.....	.....	.....
Wounds, injuries, and accidents	.....	6	4	.....	2	.....	.....
Total	.....	32	26	.....	6	.....	.....

Supply, 4th rate. Sails; wood; 547 tons.

[For 274 days of 1876 was employed on the Home station. The average ship's company for that time was 84, with 327 sick-days, under the following diseases:]

Diseases.	Remaining.	Admitted.	Discharged.	Discharged from service.	Transferred.	Died.	Remaining.
Miasmatic		1	1				
Enthetic		3	3				
Dietic							
Diathetic		2	1		1		
Developmental							
Tubercular							
Parasitic							
Of the nervous system							
eye		1			1		
ear							
teeth							
circulatory system							
respiratory system		2	2				
digestive system		3	3				
urinary and genital system		1	1				
locomotive system							
integumentary system							
Non-malignant tumors and cysts							
Wounds, injuries, and accidents		6	4		2		
Total		19	15		4		

Shawmut, 3d rate. Screw; wood; 410 tons.

[For the year 1876 was employed on the Home station. The average number of the ship's company was 116, with 1,388 sick-days, presenting the following diseases:]

Diseases.	Remaining.	Admitted.	Discharged.	Discharged from service.	Transferred.	Died.	Remaining.
Miasmatic	1	21	22				
Enthetic	1	13	13				1
Dietic							
Diathetic		15	15				
Developmental							
Tubercular		1			1		
Parasitic							
Of the nervous system		7	6	1			
eye		3	1		2		
ear		1	1				
teeth							
circulatory system		3	3				
respiratory system	1	32	32		1		
digestive system		31	29	1	1		
urinary and genital system		6	4		2		
locomotive system							
integumentary system		17	17				
Non-malignant tumors and cysts							
Wounds, injuries, and accidents	1	29	30				
Total	4	179	173	2	7		1

St. Louis, 3d rate, 2d class. Sails; wood; 431 tons.

[For the year 1876 was employed as the receiving-ship at League Island. The average number of the ship's company for that period, 109; with a total number sick-days of 891, representing the following diseases:]

Diseases.	Remaining.	Admitted.	Discharged.	Discharged from service.	Transferred.	Died.	Remaining.
Miasmatic	2	17	18		1		
Enthetic		12	12				
Dietic							
Diathetic		10	10				
Developmental							
Tubercular							
Parasitic		1	1				
Of the nervous system		1					1
eye		1	1				
ear							
teeth							
circulatory system							
respiratory system		3	2		1		
digestive system		11	11				
urinary and genital system							
locomotive system							
integumentary system		12	10		2		
Non-malignant tumors and cysts							
Wounds, injuries, and accidents		15	12		1	1	1
Total	2	83	77		5	1	2

Tennessee, 2d rate. Screw; wood; 2,840 tons.

[For the year 1876 was employed on the Asiatic station. Average number of ship's company for the year, 420; total sick-days, 10,227, with the following diseases:]

Diseases.	Remaining.	Admitted.	Discharged.	Discharged from service.	Transferred.	Died.	Remaining.
Miasmatic	3	33	29		6		1
Enthetic	14	82	75	1	17		3
Dietic	1	34	35				
Diathetic	3	119	100	2	15		5
Developmental							
Tubercular							
Parasitic		1	1				
Of the nervous system	1	35	31		4		1
eye		6	6				
ear							
teeth		1	1				
circulatory system		16	8	1	7		
respiratory system	3	53	49		7		
digestive system	2	180	177		4		1
urinary and genital system		34	29	1	4		
locomotive system		5	4		1		
integumentary system		96	92		1		3
Non-malignant tumors and cysts							
Wounds, injuries, and accidents	11	125	125		5	1	5
Total	38	820	762	5	71	1	19

Tuscarora, 3d rate. Screw; wood; 726 tons.

[For 258 days of 1876 was employed on the North Pacific station. Average number of crew for that period, 153 +; with 901 total sick-days, represented by the following diseases:]

Diseases.	Remaining.	Admitted.	Discharged.	Discharged from service.	Transferred.	Died.	Remaining.
Miasmatic		3	3				
Enthetic		17	17				
Dietic		1	1				
Diathetic	1	9	9		1		
Developmental							
Tubercular							
Parasitic							
Of the nervous system		6	6				
eye	1		1				
ear							
teeth							
circulatory system							
respiratory system	1	20	18		3		
digestive system		8	8				
urinary and genital system		2	2				
locomotive system							
integumentary system	1	19	20				
Non-malignant tumors and cysts							
Wounds, injuries, and accidents		25	22		3		
Total	4	110	107		7		

Tallapoosa, 4th rate. Paddle-wheel; wood; 650 tons.

[For the year 1876 was employed on special service on the Home station. Average number of crew, 100; for 275 days of 1876 had a total of 465 sick-days, presenting the following diseases:]

Diseases.	Remaining.	Admitted.	Discharged.	Discharged from service.	Transferred.	Died.	Remaining.
Miasmatic		20	19		1		
Enthetic		3	2		1		
Dietic							
Diathetic		1	1				
Developmental							
Tubercular							
Parasitic							
Of the nervous system							
eye							
ear							
teeth							
circulatory system							
respiratory system		20	14		5	1	
digestive system		19	18			1	
urinary and genital system							
locomotive system		1			1		
integumentary system		5	4		1		
Non-malignant tumors and cysts							
Wounds, injuries, and accidents		14	12			2	
Total		83	70		9	4	

Vandalia, 3d rate. Screw; 981 tons.

[For the year 1876 was employed on the European and Home stations. Average crew, 203+; total sick-days, 1,087, presenting the following diseases:]

Diseases.	Remaining.	Admitted.	Discharged.	Discharged from service.	Transferred.	Died.	Remaining.
Miasmatic		19	17		2		
Enthetic		8	6		1		1
Dietic		1			1		
Diathetic		17	10		7		
Developmental		1			1		
Tubercular							
Parasitic							
Of the nervous system		11	8		2		1
eye		4	4				
ear		4	3		1		
teeth							
circulatory system							
respiratory system		21	17		4		
digestive system		15	14		1		
urinary and genital system		3	2		1		
locomotive system							
integumentary system		4	4				
Non-malignant tumors and cysts		1	1				
Wounds, injuries, and accidents		38	32	4	2		
Total		147	118	4	23		2

Wyandotte, 4th rate. Screw; iron-clad; 550 tons.

[For the 1st and 2d quarters 1876 employed on the Home station. Average crew for that period, 60; total sick-days, 72, representing the following diseases:]

Diseases.	Remaining.	Admitted.	Discharged.	Discharged from service.	Transferred.	Died.	Remaining.
Miasmatic		1	1				
Enthetic							
Dietic							
Diathetic		2	1				1
Developmental							
Tubercular							
Parasitic							
Of the nervous system							
eye							
ear							
teeth		1	1				
circulatory system		1			1		
respiratory system		5	2		3		
digestive system		1			1		
urinary and genital system		1	1				
locomotive system							
integumentary system		1	1				
Non-malignant tumors and cysts							
Wounds, injuries, and accidents		1	1				
Total		14	8		5		1

Worcester, 2d rate. Screw; wood; 2,000 tons.

[For 84 days in the 1st and 2d quarters 1876 was employed on the Home station. Average crew for that time, 295; total sick-days, 250, representing the following diseases:]

Diseases.	Remaining.	Admitted.	Discharged.	Discharged from service.	Transferred.	Died.	Remaining.
Miasmatic		4	3				1
Enthetic		5	2		2		1
Dietic							
Diathetic		2			2		
Developmental							
Tubercular							
Parasitic							
Of the nervous system		1			1		
eye							
ear							
teeth							
circulatory system		1	1				
respiratory system	1	7	6		2		
digestive system		3	1		2		
urinary and genital system		3	3				
locomotive system							
integumentary system		6	3		2		1
Non-malignant tumors and cysts							
Wounds, injuries, and accidents	1	7	8				
Total	2	39	27		11		3

Yantic, 3d rate. Screw; wood; 410 tons.

[For the year 1876 was employed on the Asiatic station Average crew for the year, 124; total sick-days, 2,370, representing the following diseases:]

Diseases.	Remaining for 1875.	Admitted.	Discharged.	Discharged from service.	Transferred.	Died.	Remaining.
Miasmatic		4	4				
Enthetic		32	29	1	2		
Dietic		7	7				
Diathetic		15	7		8		
Developmental							
Tubercular							
Parasitic							
Of the nervous system		4	1		3		
eye		3	3				
ear		2	2				
teeth							
circulatory system		4	2		2		
respiratory system	2	18	14		5	1	
digestive system	1	51	50				2
urinary and genital system	1	12	10		3		
locomotive system		3	1		2		
integumentary system	1	18	16		2		1
Non-malignant tumors and cysts		1	1				
Wounds, injuries, and accidents		24	22	1	1		
Total	5	198	203	2	28	1	3

Estimates of appropriations required for the service of the fiscal year ending June 30, 1879, by the Bureau of Medicine and Surgery.

Detailed objects of expenditure, and explanations.		Estimated amount which will be required for each detailed object of expenditure.	Amount appropriated for the current fiscal year ending June 30, 1878.
SALARIES.			
One chief clerk, per act March 3, 1877 (19 Stat. at L., p. 312, sec. 1; Rev. Stats., p. 70, sec. 416)		$1,800 00	
One clerk of class three, per act of March 3, 1877 (19 Stat. at L., p. 312, sec. 1; Rev. Stats., p. 26, sec. 167)		1,600 00	
One messenger, per act March 3, 1877 (19 Stat. at L., p. 312, sec. 1)		840 00	
One laborer, per act March 3, 1877 (19 Stat. at L., p. 312, sec. 1)		720 00	
One clerk of class two (submitted)		1,400 00	
		6,360 00	$4,960 00
CONTINGENT EXPENSES.			
Stationery and miscellaneous items (appropriated, 19 Stat. at L., p. 312, sec. 1)		400 00	
		400 00	100 00
SURGEONS' NECESSARIES AND APPLIANCES.			
For support of the Medical Department of the Navy, for vessels in commission, navy-yards, naval stations, Marine Corps, and Coast Survey (appropriated, 19 Stat. at L., p. 388, sec. 1)		48,000 00	
		48,000 00	30,000 00
REPAIRS AND IMPROVEMENT OF HOSPITALS.			
For repairs to Naval Laboratory, naval hospitals and appendages, including roads, wharves, outhouses, sidewalks, fences, gardens, farms, cemeteries, steam-heating apparatus, furniture, head-marks for graves in cemeteries, &c (appropriated, 19 Stat. at L., p. 388, sec. 1)		51,200 00	
		51,200 00	20,000 00
CONTINGENT.			
For contingent expenses of the bureau; for freight on medical stores; transportation of insane patients; advertising; telegraphing; purchase of books; expenses attending the naval medical examining boards; purchase and repair of wagons and harness; purchase of cows and horses, and feed for same; purchase of trees, seeds, garden-tools, fuel, &c. (appropriated, 19 Stat. at L., p. 389, sec. 1)		25,000 00	
		25,000 00	15,000 00
CIVIL ESTABLISHMENT—NAVAL HOSPITALS AND LABORATORY.			
Naval Hospital, Chelsea, Mass.:			
One purveyor, $750; one apothecary, $480; one engineer, $600	$1,830		
One fireman, $300; one fireman, $150; one gardener, $360	810		
One gate-keeper, $240; three nurses and one mess-room attendant, $240 each	1,200		
One chief cook, $216; one assistant cook, $168; one master-at-arms, $360	744		
Three washers, at $168 each; four watchmen, at $360 each	1,944		
Two laborers, at $240 each	480		
		7,008 00	
Naval Hospital, New York:			
One purveyor, $750; one apothecary, $480; three nurses, at $240 each	$1,950		
One gardener, $480; one watchman, $420; one watchman, $240	1,140		
One stable-keeper and two firemen, at $480 each; one gate-keeper, $360	1,800		
One mess-man, one laborer, and one chief cook, at $240 each	720		
One assistant mess-man and one assistant cook, at $180 each; one laundress, $216	576		
One washer and two chambermaids, at $168 each	504		
		6,690 00	
Naval Hospital, Philadelphia, Pa.:			
One purveyor, $750; one apothecary, $480; one engineer, $600	$1,830		
One fireman, $300; one carpenter, $480; one gardener, $360	1,140		
One watchman and one mess-room attendant, at $240 each	480		
Three nurses, two laborers, and one chief cook, at $240 each	1,440		
Three washers, at $190 each; one assistant cook, at $168	738		
		5,628 00	
Naval Hospital, Washington, D. C.:			
One purveyor, $750; one apothecary, $480; two firemen, at $360 each	$1,950		
Three nurses and one messenger, at $240 each; two cooks, at $180 each	1,320		
Two laundresses and two laborers, at $144 each; one watchman, $300	876		
One mess-room attendant	180		
		4,326 00	

Estimates of appropriations required for the fiscal year, &c.—Continued.

Detailed objects of expenditure and explanations.		Estimated amount which will be required for each detailed object of expenditure.	Amount appropriated for the current fiscal year ending June 30, 1878.
CIVIL ESTABLISHMENT—Continued.			
Naval Hospital, Norfolk, Va.:			
One purveyor, $750; one apothecary, $480; one engineer, $600	$1,830		
One cook and three nurses, at $240 each; one cook, at $180	1,140		
One ambulance-driver and one mess-room attendant, at $180 each	360		
One boatman and two mess-room attendants, at $156 each; one cook, $120	588		
Four laborers, at $150 each; two laundresses, at $96 each	792		
		$4,710 00	
Naval Hospital, Pensacola, Fla.:			
One apothecary, $750; one cook, $240; one nurse and one laborer, at $204 each	$1,398		
One mess-room attendant, $168	168		
		1,566 00	
Naval Hospital, Mare Island, Cal.:			
One purveyor, $1,000; one apothecary and one engineer, at $750 each	$2,500		
One fireman, $360; one chief cook, $540; one assistant cook $300	1,200		
Three nurses and one gardener, at $420 each; one laborer, $300	1,980		
One watchman, two washers, and one ambulance-driver, at $360 each	1,440		
Two mess-room attendants, at $300 each	600		
		7,720 00	
Naval Hospital, Yokohama, Japan:			
One apothecary, $750; one nurse, $240; one watchman, $216	$1,206		
One cook, $288; one assistant cook, $108; one gardener, 120	516		
Three laborers, at $72 each	288		
		2,010 00	
Naval Academy, Annapolis, Md.:			
One apothecary, $750; one nurse, $240; two laborers, at $180 each	$1,350		
One watchman (for duty at hospital), $730	730		
		2,080 00	
Naval Laboratory, New York:			
One clerk, one manufacturer, and one carpenter, at $700 each	$2,100		
One engineer and one chief packer, at $660 each; one fireman, $300	1,620		
One shipping-porter, $504; two assistant packers, $300 each	1,104		
		4,824 00	
Navy-yard, Portsmouth, N. H.:			
One apothecary, $750; one cook, $240; one nurse, $240	1,230		
One watchman	730		
		1,960 00	
Navy-yard, Boston, Mass.:			
One apothecary, $750; one laborer, $548		1,298 00	
Navy-yard, New York:			
One apothecary, $750; one laborer, $548		1,298 00	
Navy-yard, Philadelphia:			
One apothecary, $750; one laborer, $548		1,298 00	
Navy-yard, Washington, D. C.:			
One apothecary, $750; one laborer, $548		1,298 00	
Navy-yard, Norfolk, Va.:			
One apothecary, $750; one laborer, $548		1,298 00	
Navy-yard, Pensacola, Fla.:			
One apothecary, $750; one laborer, $548		1,298 00	
Navy-yard, Mare Island, Cal.:			
One apothecary, $1,000; one laborer, $730 (appropriated; 19 Stat. at L., p. 389, sec. 1)		1,730 00	
		58,040 00	25,000 00
NAVAL HOSPITAL FUND.			
For maintenance of the naval hospitals, Portsmouth, N. H., Chelsea, Mass., Brooklyn, N. Y., Philadelphia, Pa., Annapolis, Md., Washington, D. C., Norfolk, Va., Pensacola, Fla., Mare Island, Cal., and Yokohama, Japan (submitted)		100,000 00	
RECAPITULATION.			
Surgeons' necessaries and appliances		48,000 00	30,000 00
Repairs and improvements of hospitals		51,200 00	20,000 00
Contingent		25,000 00	15,000 00
Civil establishment		58,040 00	25,000 00
Naval-hospital fund		100,000 00	.....
		282,240 00	90,000 00

Respectfully submitted.

W. GRIER,
Surgeon-General, United States Navy.

Estimates of appropriations required for the service of the fiscal year ending June 30, 1877, by the Bureau of Medicine and Surgery.

Detailed object of expenditure, and explanations.	Estimated amount which will be required for each detail of object of expenditure.	Amount appropriated for the current fiscal year, ending June 30, 1877.
DEFICIENCIES.		
SURGEONS' NECESSARIES AND APPLIANCES.		
For amount due from the appropriation, surgeons' necessaries and appliances, for the fiscal years ending June 30, 1875, 1876, and 1877, to the naval-hospital fund, for medicines and medical stores furnished vessels in commission, navy-yards, naval stations, Marine Corps, and Coast Survey (appropriated)	$52,985 17	$30,000 00

Respectfully submitted.

W. GRIER,
Surgeon-General, United States Navy.

No. 8—BUREAU OF PROVISIONS AND CLOTHING.

BUREAU OF PROVISIONS AND CLOTHING,
October 25, 1877.

SIR: In accordance with instructions contained in your letter of the 10th instant, I have the honor to submit, herewith, estimates, marked A, B, C, D, E, and F, for the fiscal year ending June 30, 1879; also, estimate of deficiency for the fiscal year 1877–'78, marked E^2, and estimates of deficiencies for the fiscal year 1876–'77, marked A^2, B^2, C^2, and D^2; together with schedules numbered 1 to 6, inclusive, and statement numbered 7, pertaining to the operations of this bureau during the year ending June 30, 1877.

It is respectfully recommended that Congress be asked to make a special appropriation of $50,000, for the purpose of building houses in the various navy-yards for the use of the pay-officers of the Navy, as the present accommodations are found to be insufficient. It is believed that pay-officers require the erection of these buildings for the more convenient transaction of business, and the better security of funds placed in their hands.

I desire to renew my recommendation that a credit of three months' pay be given to each enlisted man, when he shall have been shipped three months, as a more effectual means of preventing desertions than an outfit to each man at the time of shipment, as recommended by several of my predecessors.

I also renew my recommendation that appointments to the Paymasters' Corps of the Navy be made from graduates from the United States Naval Academy, as a measure calculated to obviate difficulties arising from assimilated rank, and to promote the general efficiency of the service.

I desire to call especial attention to the act of Congress of March 3, 1871, providing for the promotion of assistant surgeons to the rank and pay of passed assistant surgeons after three years' service, as working an injustice to the Pay Corps of the Navy.

By reference to the Navy Register it will be seen that the first nine

assistant paymasters were appointed in 1870, while there are passed assistant surgeons who did not enter the service as assistants until 1874, and who are given priority in rank, with the accompanying precedence in quarters on board ship, and increased pay, by their promotion.

The existing inequality will increase from year to year, and assistant paymasters may be fifteen years before promotion, while assistant surgeons are eligible for promotion after three years' service.

Attention is respectfully called to the unequal working of the law as it now exists, and it is most earnestly recommended that Congress be asked to amend the same, by providing that assistant paymasters, after three years' service, shall be promoted to the grade of passed assistant paymaster.

Very respectfully, your obedient servant,

JAS. H. WATMOUGH,
Paymaster-General, U. S. Navy.

Hon. R. W. THOMPSON,
Secretary of the Navy.

Statement showing the indebtedness of and the amounts due the Bureau of Provisions and Clothing, June 30, 1877.

	Provisions.	Clothing.	Pay.	Contingent.
Amount of bills unpaid	$55,846 31	$385,189 08	$22,500 00	.....
Due the various bureaus of the Navy Department	37 07	.....	.....	.....
Due "Pay of the Navy" on account of purchases and expenses of storehouses abroad	225,742 77	3,489 05	.....	$4,548 30
Due "Hospital Fund"	4,909 89	.....	.....	.....
Due on account of freight to foreign stations	.....	.....	.....	3,935 91
Total	286,536 04	388,678 13	22,500 00	8,484 21
Amounts due Bureau Provisions and Clothing from other bureaus	3,887 65	1,114 71	.....	2,077 70
Amount due "Clothing" on account of clothing issued and checked against appropriation "Pay"	.....	339,200 23	.....	.....
Due the Bureau Provisions and Clothing from Marine Corps	1,699 74	.....	.....	.....
Total	5,587 39	340,314 94	.....	2,077 70
July 1, 1877, balance indebtedness of bureau	280,948 65	48,363 19	22,500 00	6,406 51

Estimates of appropriations required for the service of the fiscal year ending June 30, 1879, *by the Bureau of Provisions and Clothing.*

Detailed object of expenditure, and explanations.	Estimated amount which will be required for each detailed object of expenditure.	Amount appropriated for the current fiscal year ending June 30, 1878.
A.—EXPENSES OF THE BUREAU OF PROVISIONS AND CLOTHING.		
For salary of chief clerk, per act July 5, 1862 (12 Stat. at L., p. 511, sec. 3)	$1,800 00	
For salary of one clerk of class four, per act July 23, 1866 (14 Stat. at L., p. 208, sec. 8)	1,800 00	
For salary of two clerks of class three, per act July 23, 1866 (14 Stat. at L., p. 208, sec. 8)	3,200 00	
For salary of one clerk of class three (submitted)	1,600 00	
For salary of two clerks of class two, per act July 23, 1866 (14 Stat. at L., p. 208, sec. 8)	2,800 00	

Estimates of appropriations required for the fiscal year, &c.—Continued.

Detailed objects of expenditure, and explanations.	Estimated amount which will be required for each detailed object of expenditure.	Amount appropriated for the current fiscal year ending June 30, 1878.
A.—EXPENSES OF THE BUREAU OF PROVISIONS AND CLOTHING—Continued.		
For salary of three clerks of class one, per act July 23, 1866 (14 Stat. at L., p. 208, sec. 8)	$3,600 00	
For salary of messenger, per act July 5, 1862 (12 Stat. at L., p. 511, sec. 3)	840 00	
For salary of one laborer, per act July 12, 1870 (16 Stat. at L., p. 250, sec. 3)	720 00	
	16,360 00	$14,760 00
NOTE.—The estimate for an additional clerk of class three is submitted; and if this be allowed the bureau would recommend that one clerk of class two and one clerk of class one be dispensed with, thus making the total appropriation only $13,760, or $1,000 *less* than that of last year.		
B.—CONTINGENT EXPENSES OF THE BUREAU.		
For blank-books, stationery, and miscellaneous items (appropriated; 19 Stat. at L., p. 312)	800 00	400 00
C.—PROVISIONS FOR THE NAVY.		
To pay 1,100 officers for commuted rations, they being on duty and entitled to the same, at 30 cents per diem (appropriated)	120,450 00	
To pay 1,500 men for commuted rations (that being one fifth of the number of men allowed), at 30 cents per diem (appropriated)	164,250 00	
For the purchase of rations for 6,000 men (that being four-fifths of the number of men allowed), at 30 cents per diem (appropriated)	657,000 00	
For 10 per cent. on above amount for waste in handling and issuing provisions, and losses by condemnation (appropriated)	65,700 00	
To pay 200 marines for commuted rations (that being one-fifth of the number on duty entitling them to a ration), at 30 cents per diem (appropriated)	21,900 00	
For the purchase of rations for 800 marines (that being four-fifths of the number on duty entitling them to a ration), at 30 cents per diem (appropriated)	87,600 00	
For 10 per cent. on above amount, for waste in handling and issuing provisions, and losses by condemnation (appropriated)	8,760 00	
To pay expenses of nine inspections in the United States, including labor, and three storehouses abroad, including labor and rent (appropriated; 19 Stat. at L., p. 389	100,000 00	
	1,225,660 00	930,000 00
For the purchase of water for ships (appropriated; 19 Stat. at L., p. 389)	30,000 00	25,000 00
NOTE.—In submitting this estimate the bureau respectfully refers to its deficiency estimate for the fiscal year 1876–'77, an examination of which will show that a less sum than that herein asked for will be insufficient to meet the demands upon the bureau.		
D.—CONTINGENT EXPENSES OF THE NAVY UNDER BUREAU OF PROVISIONS AND CLOTHING.		
For freight charges on shipments	30,000 00	
For candles	25,600 00	
For fuel	1,000 00	
For books and blanks	2,000 00	
For stationery	9,000 00	
For advertising and commissions on sales	1,500 00	
For postage, telegrams, and express charges	500 00	
For tolls, ferriage, and car-tickets	300 00	
For yeoman's stores	3,000 00	
For iron safes	2,000 00	
For newspapers, ice, and other expenses not enumerated (appropriated, 19 Stats. at L., p. 389)	700 00	
	75,000 00	35,000 00
NOTE.—Prior to the fiscal year 1874–'75, the annual appropriation under "Contingent," Bureau of Provisions and Clothing, was $75,000, and it is found by experience that a smaller sum than this is inadequate to the wants of the service. The comparatively small deficiency under this head from the reduced appropriation of last year is owing to the fact that the full supplies of stores on foreign stations at the commencement of the year rendered but few shipments necessary; but it is probable that shipments to most of them will be required during the present year.		

Estimates of appropriations required for the fiscal year, &c.—Continued.

Detailed objects of expenditure, and explanations.	Estimated amount which will be required for each detailed object of expenditure.	Amount appropriated for the current fiscal year ending June 30, 1878.
E.—SMALL STORES FOR THE NAVY.		
For the purchase of small stores (submitted)	$75,000 00	
F.—CIVIL ESTABLISHMENT.		
Navy-yard, Boston, Mass.:		
One writer to paymaster	1,017 25	
One writer to inspector	1,017 25	
Navy-yard, New York, N. Y.:		
One assistant inspector	1,400 00	
One writer to inspector	1,017 25	
One writer to paymaster	1,017 25	
One writer to paymaster	939 00	
Navy-yard, League Island, Pa.:		
One writer to paymaster	1,017 25	
Navy-yard, Washington, D. C.:		
One writer to paymaster	1,017 25	
Navy-yard, Norfolk, Va.:		
One writer to paymaster	1,017 25	
One writer to inspector	1,017 25	
Navy-yard, Mare Island, Cal.:		
One writer to paymaster	1,017 25	
One writer to inspector (submitted, 17 Stats. at L., p. 552, sec. 1)	1,017 25	
	12,511 50	$14,285 00
NOTE.—Since the fiscal year ending June 30, 1874, the appropriations for "Civil Establishment" have been made in gross for the entire Navy Department, instead of for each bureau separately, as was done prior to that year.		

Estimates of appropriations required for the service of the fiscal year ending June 30, 1878, *by the Bureau of Provisions and Clothing.*

Detailed objects of expenditure, and explanations.	Estimated amount which will be required for each detailed object of expenditure.	Amount appropriated for the current fiscal year ending June 30, 1878.
DEFICIENCIES.		
E².—PROVISIONS.		
For the payment of commuted rations, pay of labor, purchase of provisions and water, &c., being the difference between the estimate and the appropriation for the year (submitted)	$298,721 85	
NOTE.—In submitting this estimate, the bureau respectfully refers to its deficiency estimate for the fiscal year 1876–'77, an examination of which will show that a less sum than that herein asked for will be insufficient to meet the demands upon the bureau. It would also add that, it having become generally known that the appropriations are insufficient, an increased price has to be paid for articles purchased. The reservation bills for stores delivered in July, 1876, have not been paid, and cannot be until an appropriation shall have been made; the contractor thus having to wait not less than fifteen months for his pay after the delivery of stores.		

Estimates of appropriations required for the service of the fiscal year ending June 30, 1877, by the Bureau of Provisions and Clothing.

Detailed objects of expenditure, and explanations.	Estimated amount which will be required for each detailed object of expenditure.	Amount appropriated for the current fiscal year ending June 30, 1877.
DEFICIENCIES.		
A².—Provisions.		
To pay officers, crew, and marines commuted rations; and to reimburse "Pay of the Navy" for expenditures under "Provisions" from "Pay of the Navy," by pay-officers of ships (submitted)	$226, 242 42	
To pay Bureau of Medicine and Surgery commuted rations of sick in hospitals (submitted)	16, 035 55	
To pay for provisions purchased and delivered during the fiscal year (submitted)	55, 846 31	
	298, 124 28	
NOTE.—All the returns for the three quarters ended March 31, 1877, have been received and settled; and the above estimate is based upon the same ratio of expenditure for the fourth quarter. During the three quarters $463,831.82 was paid by paymasters abroad for commuted rations and the purchase of provisions, from the appropriation "Pay of the Navy"; $62,186.00 has been drawn from the bureau for payment of commuted rations, and $51,027 for payment of labor in the inspections of provisions and clothing in the United States; leaving $477,955.18 for the purchase of provisions in the United States by the bureau. The daily average number of officers to whom commutation of rations has been paid is 1,079; the daily average number of marines rationed, 1,026.		
B².—Clothing.		
To reimburse "Pay of the Navy" for expenditures under "Clothing" from "Pay of the Navy," by pay-officers of ships (submitted)	3, 489 05	
To pay bills for clothing purchased and delivered during the fiscal year 1876–'77, and previous years (submitted)	396, 866 64	
	400, 355 69	
NOTE.—There is due from "Pay" to "Clothing," for cost of clothing issued to officers, crew, and marines, to March 31, 1877, the sum of $281,847.37; estimate for the quarter ending June 30, 1877, $75,000; making $356,847.37 due "Clothing," July 1, 1877.		
C².—Small stores. (Appropriation "Pay of the Navy.")		
To pay for tobacco purchased and delivered during the fiscal year (submitted)	28, 500 00	
D².—Contingent.		
To reimburse "Pay of the Navy" for expenditures under "Contingent of Bureau" from "Pay of the Navy," by pay-officers of ships (submitted)	4, 241 75	
To pay freight on stores to foreign stations (submitted)	3, 935 91	
	8, 177 66	

Schedule of proposals received during the fiscal year ending June 30, 1877, for supplies to be delivered at Portsmouth, N. H., during the fiscal year 1877–'78.

Name.	Fresh bread.	Fresh beef.	Vegetables.
	Per pound.	*Per pound.*	*Per pound.*
J. Stokell & Co *	$0 06	$0 08	$0 01¼
J. E. Chase	06¼	08 88/100	01 88/100

* Contracts awarded.

Schedule of proposals received during the fiscal year ending June 30, 1877, for supplies to be delivered at Boston, Mass., during the fiscal year 1877-'78.

Name.	Baking bread.	Fresh bread.	Fresh beef.	Vegetables.
	Per barrel of flour.	*Per pound.*	*Per pound.*	*Per pound.*
C. F. Austin & Co.*	$1 75	$0 06½		
J. W. Hobbs*			$0 11½	$0 02½
C. Flanders			12	02½

* Contracts awarded.

Schedule of proposals received during the fiscal year ending June 30, 1877, for supplies to be delivered at New York during the fiscal year 1877-'78.

Name.	100,000 pounds sugar.	Baking bread.	Fresh bread.	500 barrels Navy beef.	Fresh beef.	Vegetables.
	Per pound.	*Per barrel of flour.*	*Per pound.*	*Per barrel.*	*Per pound.*	*Per pound.*
W. F. Turner				$19 00		
J. W. McCulloh				16 40		
William Mathews				17 35		
Halstead & Co				16 43		
William Mathews*	$0 10 97/100					
H. K. Thurber & Co	11					
J. W. Motley	11 48/100					
Henry Adams	11 30/100					
E. Treadwell & Son		$1 49				
C. T. Goodwin & Sons*		1 00				
John Hanley*					$0 13½	$0 03½
J. Lancaster					14½	04½
L. J. Tormey					14½	04½
J. McNamara*			$0 05½			

* Contracts awarded.

Proposals for Navy beef not accepted.

Schedule of proposals received during the fiscal year ending June 30, 1877, for supplies to be delivered at League Island, Pa., during the fiscal year 1877-'78.

Name.	Baking bread.	Fresh bread.	Fresh beef.	Vegetables.
	Per barrel of flour.	*Per pound.*	*Per pound.*	*Per pound.*
J. S. Ivins & Son*	$1 44			
H. H. Corney			$0 11½	$0 03½
L. S. Boraef*		$0 06	10½	03½

* Contracts awarded.

Schedule of proposals received during the fiscal year ending June 30, 1877, for supplies to be delivered at Washington, D. C., during the fiscal year 1877-'78.

Name.	Fresh bread.	Fresh beef.	Vegetables.
	Per pound.	*Per pound.*	*Per pound.*
J. T. Varnell	$0 04½	$0 05½	$0 03½
J. G. Carroll*		06	02 9/10
M. H. Homiller	05	07 9/10	03
George Seits & Son*	04½		

* Contracts awarded.

The bid of J. T. Varnell, for fresh bread, was withdrawn in favor of George W. Seits & Son.

Schedule of proposals received during the fiscal year ending June 30, 1877, for supplies to be delivered at Norfolk and Hampton Roads, Va., during the fiscal year 1877–'78.

Name.	Baking bread.	Fresh bread.	Water.	Fresh beef.	Vegetables.
	Per barrel of flour.	*Per pound.*	*Per gallon.*	*Per pound.*	*Per pound.*
R. Searls				$0 08 48/100	$0 [illegible]
J. G. Codd				08 77/100	[illegible]
Kimberly Bros				08 74/100	[illegible]
F. Dusch				08	[illegible]
J. Gutman				09	[illegible]
S. Westheimer				07½	[illegible]
J. E. Baum *				07 48/100	[illegible]
J. Reid & Co	*$1 75	$0 06			
C. F. Cabler *		05⅝			
B. W. Baker *			†$0 00¼		
Do *			‡00½		
J. Baker			00 48/100		
C. W. Clark			†00½		
Do			‡00¾		

* Contracts awarded. † For delivery at Norfolk. ‡ For delivery at Hampton Roads.

Schedule of proposals received during the fiscal year ending June 30, 1877, for supplies to be delivered at Port Royal, S. C., during the fiscal year 1877–'78.

Name.	Water.	Fresh bread.	Fresh beef.	Vegetables.
	Per gallon.	*Per pound.*	*Per pound.*	*Per pound.*
H. F. Turner			$0 15	$0 05
Benjamin Burr *			12 48/100	03
James Odell *		$0 06		
Dick & Small *	$0 01½			

* Contracts awarded.

NOTE.—The above-mentioned supplies to be delivered to the vessels lying off Port Royal by the contractors, when required, without extra charge.

Schedule of proposals received during the fiscal year ending June 30, 1877, for supplies to be delivered at Key West, Fla., during the fiscal year 1877–'78.

Name.	Navy bread.	Fresh beef.	Vegetables.
	Per pound.	*Per pound.*	*Per pound.*
J. J. Philbrick *		$0 11	$0 05
Lazo & McClennan		12½	05
George W. Maslin *	$0 06½		

* Contracts awarded.

Schedule of proposals received during the fiscal year ending June 30, 1877, for supplies to be delivered at Pensacola, Fla., during the year 1877–'78.

Name.	Fresh bread.	Navy bread.	Fresh beef.	Vegetables.
	Per pound.	*Per pound.*	*Per pound.*	*Per pound.*
James Murphy *			$0 09½	$0 05
J. S. Bell			10½	04½
J. O'Neal *		$0 05½		
H. McKenzie *	$0 06			
Moses White	06½			

* Contracts awarded.

Schedule of proposals received during the fiscal year ending June 30, 1877, for supplies to be delivered at Mare Island, Cal., during the fiscal year 1877–'78.

Name.	Fresh bread.	Navy bread.	Fresh beef.	Vegetables.
	Per pound.	*Per pound.*	*Per pound.*	*Per pound.*
J. F. Tobin*	$0 04½		$0 07	$0 03½
A. Newman			07 9/10	03 9/10
San Francisco Cracker Company		$0 04½		
California Cracker Company*		03 9/10		

* Contracts awarded.

Statement of contracts made by the Bureau of Provisions and Clothing, for and in behalf of the Navy Department, during the fiscal year ending June 30, 1877.

Name.	Date.	Articles contracted for.	Price.	Where to be delivered.
	1877.			
J. E. Baum	June 25	Fresh beef ... per lb	$0 07 99/100	Norfolk, Va.
Do	June 25	Vegetables ... do	02	Do.
B. W. Baker	June 25	Water ... per gall.	00½	Do.
Do	June 25	... do ... do	00½	Hampton Roads.
C. T. Cabler	June 25	Fresh bread ... per lb.	05½	Norfolk, Va.
J. G. Carroll	June 27	Fresh beef ... do	06	Washington, D. C.
Do	June 27	Vegetables ... do	02 9/10	Do.
L. S. Borsef	June 28	Fresh beef ... do	10½	League Island, Pa.
Do	June 28	Vegetables ... do	03½	Do.
Do	June 28	Fresh bread ... do	06	Do.
John Hanley	June 29	Fresh beef ... do	13½	New York, N. Y.
Do	June 29	Vegetables ... do	03½	Do.
William Mathews	June 29	100,000 pounds sugar ... do	10 97/100	Do.
J. McNamara	June 29	Fresh bread ... do	05½	Do.
J. S. Ivins & Sons	June 29	Baking bread ... per bbl. of flour	1 44	League Island, Pa.
C. F. Austin & Co	June 30	... do ... do	1 75	Boston, Mass.
Do	June 30	Fresh bread ... per lb	06½	Do.
C. T. Goodwin & Sons	June 30	Baking bread ... per bbl. of flour	1 00	New York, N. Y.
G. Seitz & Son	June 30	Fresh bread ... per lb	04½	Washington, D. C.
J. W. Hobbs	June 30	Fresh beef ... do	11½	Boston, Mass.
Do	June 30	Vegetables ... do	02½	Do.

NOTE.—The above-mentioned supplies to be delivered as required during the fiscal year 1877-'78.

No. 9.—BUREAU OF STEAM-ENGINEERING.

NAVY DEPARTMENT,
BUREAU OF STEAM-ENGINEERING,
Washington, November 9, 1877.

SIR: I have the honor to submit to the department the annual report of the operations of this bureau.

On the 3d of March, 1877, I received my commission as Chief of this bureau, and on assuming its duties, found the departments under its cognizance at the several navy-yards nominally closed. This course had been rendered necessary in consequence of the small balance of appropriation for fiscal year 1876–'77 remaining to the credit of the bureau, namely, $36,291.07. With this amount nothing could be done, except to maintain, as far as possible, a partial organization at the several navy-yards, and to preserve the machinery, tools, &c., from deterioration.

In obedience to your order, I had the honor to submit to you, on the 15th of March, tabulated exhibits, giving a complete and comprehensive statement of the financial condition of the bureau at that date for all

purposes, showing a total indebtedness of $2,995,835.48. Of this amount, $1,165,000 was for contracts made March 3, 1877, and $331,621.09 were for contracts made March 7. These contracts were subsequently suspended by your order.

NAVY-YARDS.

The departments under the cognizance of this bureau in the several navy-yards are, with two or three exceptions (Pensacola, Norfolk, and Boston), in excellent working condition. Your attention has been called to the necessities of these yards in special reports, accompanied with drawings showing the proposed improvements and additions, and, for the reasons assigned in my former communications, I would again urge their importance upon your consideration.

The following will exhibit the extent and character of the work done by this bureau upon the machinery, boilers, &c., of naval steamers during the past year, the work now being done, and the work necessary to be done to repair and refit machinery, &c., for efficient service.

Colorado (1st rate).—New boilers have been completed by C. H. Delamater & Co., New York, and have been delivered at the Brooklyn navy-yard. Machinery, &c., will require minor repairs for present duty, and general overhauling and repairs if ordered for sea-service.

Franklin (1st rate).—New boilers are in an advanced state toward completion by John Roach, New York. Machinery, &c., will require minor repairs for preservation and present duty, and general overhauling and repair if ordered for sea service.

Wabash (1st rate).—New boilers are being constructed by John Roach, New York. Machinery, &c., require small repairs for preservation and present duty, and *new* machinery if ordered for sea-service.

Iowa (2d rate).—Boilers being removed and refitted for use on other vessels.

Tennessee, (2d rate).—Machinery, &c., require some repairs and readjustments when the vessel has completed her present cruise.

Lancaster (2d rate).—The new boilers completed by the Providence Steam-Engine Company have been delivered at the Portsmouth, N. H., navy-yard. When the vessel is rebuilt, the machinery will require general overhauling, repair, and re-erection.

Brooklyn (2d rate).—New boilers have been constructed by John Roach and delivered in the Brooklyn navy-yard. Machinery, &c., has been ordered to be repaired in the Brooklyn navy-yard.

Pensacola (2d rate).—Machinery, &c., undergoing considerable repair at Mare Island navy-yard for temporary service. Will require extensive repairs and new boilers.

Hartford (2d rate).—New boilers have been constructed by the South Boston Iron Company, and delivered in the Boston navy-yard. Machinery, &c., require temporary repairs for present duty.

Richmond (2d rate).—New boilers nearly completed by the Providence Steam-Engine Company. Machinery, &c., undergoing extensive repairs at the Boston navy-yard.

Trenton (2d rate).—Has been fitted for sea, and is now on the European station as flag-ship. Machinery, &c., require usual repairs and readjustments.

Alaska (2d rate).—New boilers, constructed by Quintard Iron-Works, have been completed and delivered at the Brooklyn navy-yard, and are now being being placed on board the vessel. Machinery, &c., undergoing thorough repair, and a new four-bladed screw propeller is to be fitted in place of the two bladed propeller.

Benicia (2d rate).—New boilers, made by Quintard Iron-Works, have been completed and delivered at the Brooklyn navy-yard. These boilers have been shipped to the Mare Island navy-yard, where they will be placed on board the vessel when they arrive. Machinery, &c., is being thoroughly repaired.

Omaha (2d rate).—New boilers are partially completed by the Providence Steam-Engine Company. The engines require extensive repairs. A new four-bladed screw propeller is to be fitted in place of the present two-bladed propeller when the repairs are made.

Plymouth (2d rate).—Engines, &c., require thorough repairs and new boilers made and placed in the vessel. When the repairs are made, a new four-bladed screw propeller will be fitted in place of the present two-bladed propeller.

Lackawanna (2d rate).—Engines, &c., require considerable repairs and new boilers are to be placed on board.

Ticonderoga (2d rate).—Undergoing extensive repairs at the Portsmouth, N. H., navy-yard. The present two-bladed propeller is to be replaced by the original four-bladed propeller.

Canandaigua (2d rate).—Machinery, &c., undergoing extensive repairs at the Norfolk navy-yard. The present two-bladed propeller is to be replaced by a new four-bladed propeller.

Shenandoah (2d rate).—New boilers have been made by the South Boston Iron Company and delivered at the Boston navy-yard. Machinery, &c., require thorough overhauling and repair and new boilers placed on board the vessel.

Juniata (3d rate).—Machinery, &c., require very extensive repairs and the new boilers now completed to be placed on board the vessel.

Ossipee (3d rate).—Machinery, &c., require small repairs for present duty.

Quinnebaug (3d rate).—The work of erecting the machinery, boilers, &c., by Messrs. Neafie & Levy, has been completed, and a satisfactory steam-trial has been made at the dock, and the ship will be fitted for sea at an early date.

Galena (3d rate).—But little progress has been made upon the compound machinery for this vessel at the Norfolk navy-yard, but the work is again fairly in hand and progressing favorably.

Mohican (3d rate).—But little progress has been made upon the compound machinery for this vessel at the Mare Island navy-yard, but the work is again fairly in hand and progressing favorably.

Iroquois (3d rate).—Requires extensive repairs to machinery and new boilers to be made.

Wachusett (3d rate).—Machinery, &c., undergoing thorough repairs at the Boston navy-yard; new boilers are being placed on board, and the present two bladed propeller is to be replaced by the original four-bladed propeller.

Tuscarora (3d rate).—Machinery, &c., undergoing thorough repairs at the Mare Island navy-yard. Contract for new boilers was made with the South Boston Iron Company March 7, 1877, and subsequently suspended by your order.

Kearsarge (3d rate).—New boilers have been completed by the Providence Steam-Engine Company, and are now being delivered at the Boston navy-yard. Machinery, &c., require extensive repairs and the new boilers placed on board the vessel.

Nipsic (3d rate).—New compound engines are at the Washington navy-yard ready for erection on board; new boilers are being made in same yard.

Narragansett (3d rate).—Machinery, &c., require very extensive repairs. Contract for new boilers was made with the South Boston Iron Company March 7, 1877, and subsequently suspended by your order.

Huron (3d rate).—A new iron four-bladed propeller, of bureau design, has been fitted in place of the original Hirsch four-bladed propeller, and a trial made with the most satisfactory results, giving a speed of vessel under full power of ten knots; an increase of over two knots an hour. The power of the propeller to back the vessel has been satisfactorily tested. When the ship was going at full speed ahead the order was given to back the engines, and the ship was going astern in one minute and fifteen seconds. From a state of rest, the vessel was moving astern in fifteen seconds.

Yantic (3d rate).—New boilers were constructed and delivered by the Providence Steam-Engine Company, and the machinery, &c., are awaiting repairs at the Washington navy-yard, including erection of new boilers on board vessel.

Michigan (3d rate).—Machinery, &c., require considerable repairs.

Frolic (4th rate).—Machinery, &c., require overhauling and repair when the vessel is required for service.

Tallapoosa (4th rate).—New paddle-wheels have been fitted, and small repairs to machinery, &c., made.

Amphitrite (iron-clad, 3d rate).—New boilers are well advanced toward completion at the works of the Harlan & Hollingsworth Company, Wilmington, Del. New engines for the vessel were contracted for with the Harlan & Hollingsworth Company March 3, 1877, and the contract was subsequently suspended by your order.

Camanche (iron-clad, 4th rate).—The boilers which were refitted for this vessel are being connected on board, and minor repairs are being made to the machinery.

Dictator (iron-clad, 2d rate).—Machinery, &c., needs extensive repairs. Contract for new boilers was made with South Boston Iron Company, March 10, 1877, and subsequently suspended by your order.

Miantonomoh (iron-clad, 3d rate).—The new twin compound engines, &c., are nearly completed at the works of John Roach, Chester, Pa.

Monadnock (iron-clad, 3d rate).—The new boilers built by T. F. Rowland, Greenpoint, N. Y., have been tested by a board of naval engineers preparatory to being delivered at the Brooklyn navy-yard. New engines for the vessel were contracted for with Phineas Burgess March 3, 1877, and subsequently suspended by your order.

Saugus (iron-clad, 4th rate).—Minor repairs are required to engines and boilers.

Puritan (iron-clad, 2d rate).—New boilers, constructed by John Roach, Chester, Pa., are nearly completed. New engines for the vessel were contracted for with John Roach March 3, 1877, and subsequently suspended by your order.

Terror (iron-clad, 3d rate).—New boilers being made by William Cramp & Sons are well advanced toward completion. New engines were contracted for with William Cramp & Sons March 3, 1877, and subsequently suspended by your order.

Emerald (tug).—Machinery has been thoroughly repaired, and new boiler made and placed on board the vessel at Portsmouth, N. H., navy-yard.

Leyden (tug).—Undergoing thorough repair, and new boilers are being placed and connected on board the vessel at the Boston navy-yard.

Pinta (tug).—Engines, boilers, &c., have been repaired at the Norfolk navy-yard.

Rocket (tug).—Thorough repairs to machinery, boiler, &c, have been completed at the Brooklyn navy-yard.

Snowdrop (tug).—Machinery, &c., requires extensive repairs. Contract for new boilers was made with the South Boston Iron Company, March 7, 1877, and subsequently suspended by your order.

Standish (tug).—Machinery, &c., requires extensive repairs and new boilers.

Triana (tug).—Machinery, &c., undergoing thorough repair, and new boilers are to be placed on board the vessel at the Washington navy-yard.

STEAM-MACHINERY FOR STEERING SHIPS, LIFTING ANCHORS, ETC.

The experience of foreign navies, and as well also that of the mercantile marine, shows fully the very great economy in time and labor resulting from the introduction of steam steering apparatus, windlasses, and capstans. We have at this time one or two of our naval ships supplied with steam steering machinery with very satisfactory results, and, with a view to their general introduction, a board of experienced engineer officers are now engaged in examining the most approved plans, to report upon those best adapted to the naval service.

IRON-SHIP BUILDING.

This great and growing interest, so rapidly being developed in this country, and opening additional avenues for the utilization of our coal and iron, and the education of skilled labor in that particular branch of marine engineering industry, in building up and organizing civil establishments upon which the government can call in cases of great emergencies, for the construction of its iron ships of war, cannot be overestimated. The introduction of iron in the construction of ships for the mercantile marine, as well as for naval purposes, requires that, in addition to their present practical knowledge on the subject of construction, the engineer officers of the Navy should be thoroughly versed in the theory and practice of naval architecture.

To this end, and in furtherance of this view, the following circular-letter was issued from this bureau, in September last, to the engineer officers of the Navy:

NAVY DEPARTMENT,
BUREAU OF STEAM-ENGINEERING,
Washington, September 4, 1877.

SIR: Section 1403 of the Revised Statutes provides that officers of the engineer corps may be appointed assistant naval constructors; and it is most desirable that the corps, of which you are a member, should at all times be prepared for an extension of its usefulness; it is therefore urgently recommended that in your course of scientific studies you devote more time and attention to the subject of naval architecture than heretofore, in order to fit yourself for superintending the designing and constructing of iron ships of war.

W. H. SHOCK,
Chief of Bureau.

I would, in addition to this, respectfully recommend that, if practicable, more time be devoted at the Naval Academy to this particular branch of marine engineering.

PLATE-IRON FOR BOILERS.

I would respectfully urge upon the department the necessity of a law authorizing the purchase of plate-iron for steam-boilers, wherever it can be obtained of the proper quality.

The practice (in obedience to law) of purchasing by advertisement and

from lowest bidder, entails a serious expense and delay in testing the samples of material proposed to be furnished, which, in the end, often proves utterly worthless. The authority to purchase direct from makers of known reputation their best qualities of boiler-iron, at its market value, would insure good material, and avoid these delays.

As an example of these vexatious delays I would state: On the 10th of July last this bureau advertised for proposals for boiler-iron, to be delivered in the Washington and Norfolk navy-yards on or before October 1. Specimens of the iron proposed for the delivery under this advertisement were furnished for examination and test, by the two lowest bidders, and have failed to come up to the requirements, consequently the contract for the iron has not *yet* been closed. It is quite probable that the requisite quality of iron cannot be furnished for the prices bid, which will probably cause further delay and expense, in going through the same forms of advertising and test, and may not be obtained even then.

PROCEEDS OF PUBLIC SALES.

I would also respectfully ask that Congress may be requested to amend the law in relation to proceeds of public sales, so as to allow all the expenses of said sales, such as advertising, auction fees, &c., to be deducted from the proceeds of such sales, and the balance covered into the Treasury. With the law as it now stands (section 3618 Revised Statutes) these expenses are paid from our regular appropriations, and the appropriation gets no credit therefor.

ESTIMATES.

I have the honor to submit herewith the annual estimates of this bureau for the fiscal year ending June 30, 1879; and it is proper to state that I have carefully examined and revised these estimates, and am of the opinion that they are the very lowest amounts practicable for meeting the demands upon this bureau for all matters under its cognizance for said fiscal year.

I have the honor to be, very respectfully, your obedient servant,

W. H. SHOCK,
Chief of Bureau.

Hon. R. W. THOMPSON,
Secretary of the Navy.

Statement of indebtedness—Bureau of Steam-Engineering, Navy Department.

Detailed objects of expenditure, and explanations.	Estimated amount which will be required for each detailed object of expenditure.	Total amount to be appropriated under each head of appropriation.
STEAM MACHINERY.		
To pay approved bills (see sheets marked A)	$1,056,458 04	
To pay claims for which bills have not yet been approved (see sheet marked B)	57,364 76	
To pay balances under existing contracts (see sheet marked C)	545,092 66	
To complete suspended contracts (see sheet marked D)	1,505,000 00	
		$3,163,915 46

A.

Date of bill.	Detailed objects of expenditure, and explanations.	Estimated amount which will be required for each detailed object of expenditure.	Total amount to be appropriated under each head of appropriation.
	STEAM MACHINERY.		
	To pay approved bills.		
Mar. 10, 1877	American Tube Works, bushings	$46 75	
Jan. 17, 1877	American Steam Gauge Company, spring	11 50	
Apr. 14, 1877	American Steam Gauge Company, repairs	9 00	
Feb. 28, 1877	E. H. Ashcroft, valves for Ranger	625 00	
Mar. 22, 1877	William H. Arthur & Co., stationery	22 25	
Mar. 22, 1877	do	35 00	
Apr. 7, 1877	do	135 05	
Feb. 1, 1877	Atlantic Works, work on Adams	75 86	
Feb. 1, 1877	Atlantic Works, work on Essex	308 08	
Feb. 17, 1877	Atlantic Works, expenses of trial of Essex	1,029 50	
June 18, 1877	Adams Express Company, freight	2 35	
July 16, 1877	Stillman B. Allen, governors	450 00	
Apr. 19, 1877	A. P. Brown, stores	42,099 06	
Apr. 19, 1877	do	7,121 55	
Apr. 19, 1877	A. P. Brown, lumber	1,283 33	
Feb. 26, 1877	D. Babcock & Co., stores	5,498 32	
Mar. 17, 1877	D. Babcock & Co., drills	82 50	
Mar. 17, 1877	D. Babcock & Co., stores	147 74	
Mar. 17, 1877	do	33 15	
Mar. 17, 1877	do	91 55	
Mar. 22, 1877	do	221 15	
Feb. 28, 1877	Boston Lead Company, lead	95 00	
Apr. 13, 1877	George F. Blake Manufacturing Company, pump	225 00	
May 21, 1877	Bemer & Pinckney, freight	26 05	
Feb. 28, 1877	Cook, Rymes & Co., grate	14 00	
Mar. 12, 1877	Chalmers Spence Company, leading Swatara boilers	274 23	
Mar. 12, 1877	Chalmers Spence Company, covering Swatara boilers	969 50	
Mar. 13, 1877	Coast-Wrecking Company, services	75 00	
Apr. 7, 1877	M. A. Campbell, gauging	108 60	
Aug. 10, 1876	C. H. Delamater & Co., third payment on Colorado boilers	12,500 00	
Aug. 10, 1876	C. H. Delamater & Co., fourth payment on Colorado boilers	12,500 00	
Jan. 13, 1877	C. H. Delamater & Co., seventh payment on Colorado boilers.	4,500 00	
Feb. 9, 1877	C. H. Delamater & Co., eighth payment on Colorado boilers	25,000 00	
Mar. 17, 1877	Downie, Trainer & Co., packing	69 88	
Feb. 26, 1877	F. W. Devoe & Co., alcohol	122 50	
Apr. 7, 1877	Richard Dudgeon, jacks	693 86	
Feb. 28, 1877	William P. Eddy, freight	4 42	
Mar. 19, 1877	Eastern Railroad Company, freight	11 60	
Feb. 24, 1877	George P. Goff, stores	8,663 50	
Mar. 17, 1877	do	4,621 72	
Mar. 17, 1877	do	2,026 52	
Mar. 20, 1877	do	4,896 15	
Apr. 14, 1877	do	3,369 25	
July 20, 1876	The Harlan & Hollingsworth Company, repairs on Powhatan.	766 18	

A.—*Statement of indebtedness, &c.*—Continued.

Date of bill.	Detailed objects of expenditure, and explanations.	Estimated amount which will be required for each detailed object of expenditure.	Total amount to be appropriated under each head of appropriation.
	STEAM MACHINERY—Continued.		
	To pay approved bills.		
Feb. 21, 1877	The Harlan & Hollingsworth Company, removing Amphitrite machinery.	$291 13	
Mar. 17, 1877	George E. Hanson, stores	83 00	
Mar. 17, 1877	H. H. Ham, stores	3 50	
Mar. 22, 1877	J. D. Hurlburt & Son, freight	638 40	
Mar. 2, 1877	.....do	296 73	
Apr. 19, 1877	.....do	45 48	
June 23, 1877	.....do	1,040 96	
July 3, 1877	.....do	1,631 95	
Aug. 11, 1877	.....do	377 67	
Mar. 1, 1877	Charles F. Hatch, agent, liquid-cooler	54 50	
Mar. 17, 1877	A. M. Ingersoll, paints	11,385 00	
Mar. 17, 1877	.....do	1,771 50	
Apr. 1, 1877	George W. Knox, freight	7 65	
June 5, 1877	.....do	9 56	
May 22, 1877	.....do	2 95	
Mar. 20, 1877	Manhattan Oil Company, sperm-oil	9,653 86	
Apr. 1, 1877	Manhattan Oil Company, olive-oil	7,229 70	
Nov. 1, 1876	Murphy & Co., extra work on Huron	301 66	
Feb. 28, 1877	John Mullett, alcohol	13 75	
Apr. 4, 1877	John Mullett, camphor	12 00	
Mar. 17, 1877	A. A. McCullogh, fire-brick	271 44	
Mar. 17, 1877	Manhattan Packing Company, packing	719 75	
Feb. 16, 1877	Neafie & Levy, on account for erecting Quinnebaug machinery.	25,000 00	
Mar. 29, 1877	Old Dominion Steamship Company, freight	25 10	
July 7, 1877	.....do	2 32	
July 11, 1876	Providence Steam-Engine Company, fourth payment for Lancaster boilers.	15,000 00	
Sept. 20, 1876	Providence Steam-Engine Company, fifth payment for Lancaster boilers.	15,000 00	
Dec. 27, 1876	Providence Steam-Engine Company, final payment for Lancaster boilers.	4,500 00	
Aug. 16, 1877	Providence Steam-Engine Company, final payment for Saco boilers.	43,911 30	
Aug. 2, 1877	Providence Steam-Engine Company, final payment for Yantic boilers.	38,904 02	
Aug. 28, 1877	Providence Steam-Engine Company, third payment for Kearsarge boilers.	25,000 00	
Sept. 6, 1877	Providence Steam-Engine Company, fourth payment for Kearsarge boilers.	20,000 00	
Sept. 6, 1877	Providence Steam-Engine Company, second payment for Omaha boilers.	30,000 00	
Sept. 6, 1877	Providence Steam-Engine Company, second payment for Richmond boilers.	20,000 00	
Apr. 26, 1877	Philadelphia and New York Steam-Navigation Company, freight.	2 12	
Oct. 5, 1875	Quintard Iron-Works, first payment for Alaska and Benicia boilers.	22,000 00	
Nov. 5, 1875	Quintard Iron-Works, second payment for Alaska and Benicia boilers.	20,000 00	
Dec. 1, 1875	Quintard Iron-Works, third payment for Alaska and Benicia boilers.	20,000 00	
Dec. 29, 1875	Quintard Iron-Works, fourth payment for Alaska and Benicia boilers.	20,000 00	
Feb. 5, 1876	Quintard Iron-Works, fifth payment for Alaska and Benicia boilers.	20,000 00	
Feb. 28, 1876	Quintard Iron-Works, sixth payment for Alaska and Benicia boilers.	20,000 00	
Mar. 27, 1876	Quintard Iron-Works, seventh payment for Alaska and Benicia boilers.	20,000 00	
Nov. 24, 1876	Quintard Iron-Works, eighth payment for Alaska and Benicia boilers.	3,082 54	
Nov. 24, 1876	Quintard Iron-Works, ninth payment for Alaska and Benicia boilers.	5,000 00	
Feb. 27, 1877	Rider & Cotton, brushes	106 58	
Jan. 3, 1876	T. F. Rowland, sixth and seventh payments for Monadnock boilers.	22,000 00	
Dec. 6, 1876	T. F. Rowland, eighth payment for Monadnock boilers	11,000 00	
Oct. 17, 1876	John Roach, second payment for Puritan boilers	20,370 00	

A—*Statement of indebtedness, &c*—Continued.

Date of bill.	Detailed objects of expenditure, and explanations.	Estimated amount which will be required for each detailed object of expenditure.	Total amount to be appropriated under each head of appropriation.
	STEAM MACHINERY—Continued.		
	To pay approved bills.		
Oct. 17, 1876	John Roach, third payment for Puritan boilers	$20,370 00	
Oct. 17, 1876	John Roach, fourth payment for Puritan boilers	20,370 00	
Feb. 1, 1877	John Roach, first and second payments for Brooklyn boilers.	15,000 00	
Aug. 2, 1877	John Roach, seventh, eighth, and ninth payments for Brooklyn boilers.	22,500 00	
Aug. 2, 1877	John Roach, final payment for Brooklyn boilers	10,228 20	
Feb. 1, 1877	John Roach, first and second payments for Franklin boilers.	24,000 00	
July 25, 1877	John Roach, seventh and eighth payments for Franklin boilers.	24,000 00	
Sept. 7, 1877	John Roach, alterations of Franklin boilers	10,152 36	
July 25, 1877	John Roach, third and fourth payments for Wabash boilers.	20,000 00	
July 25, 1877	John Roach, fifth payment for Wabash boilers	10,000 00	
Aug. 2, 1877	John Roach, sixth and seventh payments for Wabash boilers.	20,000 00	
Sept. 7, 1877	John Roach, eighth payment for Wabash boilers	10,000 00	
Mar. 16, 1877	John Roach, balance of reservation on Trenton's engines.	31,750 00	
Aug. 14, 1877	John Roach, cross-head for Trenton	769 25	
Mar. 17, 1877	Francis Raymond, freight	4 70	
July 16, 1877	South Boston Iron Company, first payment for Hartford boilers.	25,000 00	
July 16, 1877	South Boston Iron Company, second payment for Hartford boilers.	25,000 00	
Jan. 9, 1877	South Boston Iron Company, second payment for Shenandoah, Wachusett, and Triana boilers.	42,000 00	
Mar. 19, 1877	South Boston Iron Company, third payment for Shenandoah, Wachusett, and Triana boilers.	7,162 10	
Mar. 19, 1877	South Boston Iron Company, fourth payment for Shenandoah, Wachusett, and Triana boilers.	25,000 00	
Mar. 19, 1877	South Boston Iron Company, final payment for Shenandoah, Wachusett, and Triana boilers.	27,717 54	
May 5, 1877	Sutton & Co., freight	703 82	
July 3, 1877	.....do	325 77	
May 28, 1877	Thomas M. Shephard, bearings	130 00	
Feb. 28, 1877	Twitchell, Pike & Co., locks	18 00	
Feb. 20, 1877	William A. Torrey & Co., rubber packing hose	9,608 70	
Feb. 20, 1877	.....do	9,493 10	
Feb. 27, 1877	.....do	3,721 40	
Feb. 27, 1877	.....do	12,698 20	
Feb. 23, 1877	William A. Torrey & Co., rubber valves	385 62	
Mar. 1, 1877	William A. Torrey & Co., rubber packing	569 70	
Mar. 17, 1877	William A. Torrey & Co., rubber gaskets	45 00	
Feb. 23, 1877	Walton Brothers, heaters for Trenton	2,118 66	
Mar. 17, 1877	Walton Brothers, heaters for Enterprise	1,672 35	
Mar. 22, 1877	Walton Brothers, lamps for Trenton	259 20	
Apr. 4, 1877	Walton Brothers, heaters for Wyoming	1,716 99	
Apr. 13, 1877	Walton Brothers, oil-tanks	70 00	
May 17, 1877	Walton Brothers, heaters for Despatch	1,414 18	
May 31, 1877	Walton Brothers, heaters for Tallapoosa	1,443 25	
Feb. 15, 1877	E. V. White & Co., stores	108 68	
June 19, 1877	E. V. White & Co., packing	31 90	
July 9, 1877	E. M. Whittaker & Co., stationery	414 59	
Feb. 21, 1877	C. C. Walcott, governor for Trenton	876 71	
	Total to pay approved bills	.....	$1,056,458 04

B.

Date of order or bill.	Detailed objects of expenditure and explanations.	Estimated amount which will be required for each detailed object of expenditure.	Total amount to be appropriated under each head of appropriation.
	STEAM MACHINERY.		
	Claims for which bills have not yet been approved.		
Apr. 2, 1877	American Tube Works, brass tubes	$7,013 00	
Feb. 10, 1877	A. P. Brown, stores	3,000 00	
May 22, 1877	David Babcock & Co., stores	340 62	
June 22, 1877	David Babcock & Co., paint	49 90	
May 22, 1877	George H. Creed, screws	21 75	
May 23, 1877	Charles W. Cottle, wood	54 87	
May 18, 1877	Mercer Goodrich, stationery	1 58	
Feb. 23, 1877	J. M. Motley, Laubach's drills	4,320 00	
Aug. 26, 1876	Neafie & Levy, extras on erecting Quinnebaug's machinery	15,218 64	
June 14, 1877	Old Dominion Steamship Company, freight	2 50	
Apr. 26, 1877	Pacific Mail Steamship Company, freight	773 95	
Feb. 13, 1877	Pratt & Whitney Company, stocks, taps, and dies, &c	22,739 93	
May 21, 1877	M. A. & C. A. Santos, varnish, &c	22 25	
June 12, 1877	M. A. & C. A. Santos, soda	7 50	
May 18, 1877	Sutton & Co., freight	3,716 97	
May 24, 1877	E. V. White & Co., padlocks	12 00	
May 14, 1877	Vickery & Co., stationery	109 30	
	Total claims, unapproved bills		$57,364 76

C.

Date of contract.	Detailed objects of expenditure and explanations.	Estimated amount which will be required for each detailed object of expenditure.	Total amount to be appropriated under each head of appropriation.
	STEAM MACHINERY.		
	To pay balances under existing contracts.		
Apr. 14, 1875	William Cramp & Son, boilers for Terror, balance	66,698 27	
Dec. 14, 1875	C. H. Delamater & Co., boilers for Colorado, balance	17,713 07	
May 12, 1875	The Harlan & Hollingsworth Company, boilers for Amphitrite, balance.	78,179 08	
Apr. 5, 1875	Neafie & Levy, erecting Quinnebaug's engines, balance	5,000 00	
Nov. 27, 1876	Providence Steam-Engine Company, boilers for Kearsarge, balance.	20,000 00	
Feb. 18, 1877	Providence Steam-Engine Company, boilers for Omaha, balance.	67,266 20	
Feb. 18, 1877	Providence Steam-Engine-Company, boilers for Richmond, balance.	73,664 03	
Aug. 2, 1875	John Roach, engines for Miantonomoh, balance	34,000 00	
Sept. 5, 1876	John Roach, boilers for Puritan, balance	61,110 00	
Feb. 8, 1877	John Roach, boilers for Wabash, balance	43,259 01	
Nov. 21, 1876	John Roach, boilers for Franklin, balance	4,203 00	
Apr. 13, 1875	T. F. Rowland, boilers for Monadnock, balance	44,000 00	
Dec. 4, 1876	South Boston Iron Company, boilers for Hartford, balance	30,000 00	
	Total to pay balances on contracts		$545,092 66

D.

Date of contract.	Detailed objects of expenditure and explanations.	Estimated amount which will be required for each detailed object of expenditure.	Total amount to be appropriated under each head of appropriation.
	Suspended contracts.		
Mar. 3, 1877	Phineas Burgess, engines for Monadnock*	$285,000 00	
Mar. 3, 1877	William Cramp & Sons, engines for Terror*	230,000 00	
Mar. 3, 1877	Harlan & Hollingsworth Company, engines for Amphitrite*	230,000 00	
Mar. 3, 1877	John Roach, engines for Puritan*	420,000 00	
Mar. 7, 1877	South Boston Iron Company, boilers for Tuscarora	75,000 00	
Mar. 7, 1877	South Boston Iron Company, boilers for Narragansett	70,000 00	
Mar. 7, 1877	South Boston Iron Company, boilers for Snowdrop	20,000 00	
Mar. 10, 1877	South Boston Iron Company, boilers for Dictator	175,000 00	
	Total suspended contracts		$1,505,000 00

* Suspended contracts on work in progress under previous orders and contracts.

Estimates of appropriations required for the service of the fiscal year ending June 30, 1879, by the Bureau of Steam Engineering, Navy Department.

Detailed objects of expenditure and explanations.		Estimated amount which will be required for each detailed object of expenditure.	Amount appropriated for the current fiscal year ending June 30, 1878.
SALARIES.			
Chief clerk, per act August 15, 1876 (19 Stat. at L., p. 162, ch. 287)		$1,800 00	
Draughtsman, per act August 15, 1876 (19 Stat. at L., p. 162, ch. 287)		1,800 00	
Assistant draughtsman, per act August 15, 1876 (19 Stat. at L., p. 162, ch. 287)		1,600 00	
One clerk of class two, per act August 15, 1876 (19 Stat. at L., p. 162, ch. 287)		1,400 00	
One messenger, per act August 15, 1876 (19 Stat. at L., p. 162, ch. 287)		840 00	
One laborer, per act August 15, 1876 (19 Stat. at L., p. 162, ch. 287)		720 00	
		8,160 00	$8,160 00
Two clerks of class three (submitted)		3,200 00	
One clerk of class one (submitted)		1,200 00	
One laborer (submitted)		720 00	
		5,120 00	
CONTINGENT.		13,280 00	
For stationery and miscellaneous items, per act August 15, 1876 (19 Stat. at L., p. 162, ch. 287)		1,500 00	700 00
STEAM MACHINERY.			
For preservation of machinery, boilers, &c., in vessels on the stocks and in ordinary; purchase and preservation of all materials and stores; purchase, fitting, and repair of machinery and tools in the navy-yards; labor in the navy-yards and stations; wear, tear, and repair of machinery, boilers, &c., of naval vessels; incidental expenses, namely, foreign postage, telegrams, advertising, freight, &c., per act March 3, 1877 (19 Stat. at L., p. 389, sec. 111)		1,000,000 00	942,000 00
CIVIL ESTABLISHMENT.			
Portsmouth, N. H., navy-yard:			
One clerk	$1,300 00		
One writer (store)	1,017 25		
One draughtsman	1,600 00		
		3,917 25	
Boston, Mass., navy-yard:			
One clerk	1,400 00		
One clerk (store)	1,400 00		
One draughtsman	1,600 00		
		4,400 00	

Estimates of appropriations required for the service, &c.—Continued.

Detailed objects of expenditure, and explanations.		Estimated amount which will be required for each detailed object of expenditure.	Amount appropriated for the current fiscal year ending June 30, 1878.
Brooklyn, N. Y., navy-yard:			
One clerk	$1,400 00		
One clerk	1,300 00		
One writer (store)	1,017 25		
One draughtsman	1,600 00		
		$5,317 25	.....
League Island, Pa., navy-yard:			
One clerk	1,300 00		
One writer (store)	1,017 25		
One draughtsman	1,600 00		
		3,917 25	.....
Washington, D. C., navy-yard:			
One clerk	1,300 00		
One writer, (store)	1,017 25		
One draughtsman	1,600 00		
One writer	1,017 25		
		4,934 50	.....
Norfolk, Va., navy-yard:			
One clerk	1,300 00		
One writer (store)	1,017 25		
One draughtsman	1,600 00		
		3,917 25	.....
Pensacola, Fla., navy-yard:			
One writer		1,017 25	.....
Mare Island, Cal., navy-yard:			
One clerk	1,400 00		
One clerk	1,300 00		
One draughtsman	1,600 00		
		4,300 00	.....
		31,720 75	.....

No. 10.—BUREAU OF CONSTRUCTION AND REPAIR.

NAVY DEPARTMENT,
BUREAU OF CONSTRUCTION AND REPAIR,
October 26, 1877.

SIR: In compliance with your instructions, I have the honor to inclose herewith the estimates for the expenditures of this bureau for the fiscal year terminating 30th June, 1879, and also a list of offers to furnish materials for the Navy, under the advertisement of this bureau dated August 21, 1877.

I remain, sir, very respectfully, your obedient servant,

J. W. EASBY,
Chief of Bureau.

Hon. R. W. THOMPSON,
Secretary of the Navy.

NAVY DEPARTMENT,
BUREAU OF CONSTRUCTION AND REPAIR,
October 26, 1877.

SIR: I have the honor to submit, in conformity with your instructions, statements of the work of the bureau for the past year and estimates covering expenditures required for the fiscal year ending June 30, 1879.

1876.		1876–'77.
July 1.—Amount appropriated		$1,750,000 00
Nov. —Amount appropriated		200,000 00
Dec. —Received from other bureaus		61,036 33
1877.		
Feb. —Received from sale of Philadelphia yard		50,000 00
March.—Received from sale of Philadelphia yard		10,000 00
April. —Received from Paymaster Gilman		11,009 80
May. —Received from double-turreted monitors		3,817 15
		2,085,863 28
Expended from July 1, 1876, to June 30, 1877:		
For materials, &c	$1,543,590 87	
For navy yards	541,335 86	
		2,084,926 73
Balance on hand July 1, 1877		936 55

Vessels repaired or completed, 1877–'78.

Adams.	Essex.	Leyden.
Alarm.	Fortune.	Minnesota.
Alert.	Franklin.	Mohican.
Alliance.	Gettysburg.	Monongahela.
Antietam.	Glance.	Mayflower.
Benicia.	Hartford.	Montauk.
Camanche.	Huron.	Monterey.
Canandaigua.	Independence.	Nahant.
Catskill.	Intrepid.	Nantucket.
Cohasset.	Iowa.	Naragansett.
Colorado.	Iroquois.	New Hampshire.
Congress.	Jason.	Niagara.
Connecticut.	Jean Sands.	Nina.
Constellation.	Juniata.	Nyack.
Constitution.	Kansas.	Ohio.
Despatch.	Lackawanna.	Oregon.
Emerald.	Lancaster.	Pawnee.
Enterprise.	Lehigh.	Passaic.

Pensacola.	Sabine.	Ticonderoga.
Pilgrim.	Saco.	Trenton.
Pinta.	Saratoga.	Triana.
Portsmouth.	Saugus.	Tuscarora.
Potomac.	Seaweed.	Vandalia.
Powhatan.	Shawmut.	Wabash.
Plymouth.	Snowdrop.	Wachusett.
Quinnebaug.	Speedwell.	Worcester.
Ranger.	Saint Louis.	Wyandotte.
Relief.	Supply.	Wyoming.
Rescue.	Swatara.	Yantic.
Rose.	Tallapoosa.	

Of the five first-rates, three are in service as receiving-ships, one as a training-ship, and the other is laid up in ordinary. Considering the extensive repairs which would be required, and the expense of keeping these ships in commission at sea, the present disposition of them is regarded as the best that can be made.

Of the second-rates, the Connecticut, Java, and Pennsylvania, now on the stocks in an unfinished condition, and having white-oak frames, have so far deteriorated as to make it unadvisable to complete them. They should be appraised and offered for sale at auction. The Florida and Lancaster, now in ordinary, and the New York, on the stocks, will require a large sum of money to repair or complete and equip for sea, but as they are much needed for flag-ships, they should be taken in hand as soon as the appropriation will admit of it. The Iowa, Susquehanna, Congress, and Worcester, now in ordinary, are not worth repairing, and should be sold at public auction. The remainder of the vessels of this class can be kept in commission, or repaired, as their services may be required.

Of the third-rates, the Kansas, Nyack, Saco, and Shawmut are unfit for repairs. The Galena, Mohican, and Nipsic are on the stocks, and will be completed as rapidly as the funds of the bureau will admit of. The Swatara, Vandalia, Marion, Adams, Alliance, Essex, Alert, Huron, Ranger, and Enterprise are now in commission. The Quinnebaug is afloat, and will be put in commission in a few months. The remaining vessels of this rate are in commission or awaiting repairs.

The six fourth-rate steamers are in commission and usefully employed.

Of the wooden sailing-vessels, the Ohio, Sabine, and Cyane are unfit for use; and the New Orleans, on the stocks at Sacket's Harbor, is not worth finishing. These should all be sold or broken up. The remaining vessels of this rate are used as store, training, receiving, or school-ships. To the list of vessels to be sold should be added the ferry-boat Burlington, and to those to be broken up, the old ship of the line Virginia.

Of our armored vessels, the Colossus, Massachusetts, and Oregon, now on the stocks, and having frames of white oak, and the Roanoke afloat, have so far deteriorated that they should be broken up, and the metal material utilized in other constructions. The Dictator requires extensive repairs, and, as she is one of our best monitors when in order, these repairs should be commenced as soon as the appropriations will allow it. The Terror, Puritan, Miantonomoh, Amphitrite, and Monadnock, all double-turreted twin-screw monitors, are in course of construction by contract; work, however, being suspended at present on all but the Miantonomoh and Monadnock. These five vessels, being the most powerful we have, should be finished without delay, and it is earnestly asked that Congress may make the required appropriation to complete them.

The remaining iron-clad vessels, fourteen in number, are in good condition, and ready for service when required.

The torpedo-boats Intrepid and Alarm are in commission and ready for any emergency requiring their use.

As some of the vessels for which we have most use are now in want of extensive repairs, and are required for immediate service, an additional appropriation for the present fiscal year of $500,000 is asked for, and would enable us to put these vessels in order without the delay which must necessarily ensue if we have to wait for the appropriation for the year 1878–'79.

The vessels we shall stand most in need of in the near future are those suitable for flag-ships; and while we have several good vessels worth rebuilding or finishing for this purpose (such as the Florida, Lancaster, and New York), yet it would be wise policy to authorize the construction of four large ships to take the places of those now in commission; the time for building these vessels might extend over a period of four years, and, therefore, only one-fourth of the amount of their cost would be required at present.

In addition to these large vessels, I would ask for authority to build four very light draught swift gunboats, for use on our own coast; their cost would not exceed, in construction department, over $120,000 each, and is included in the estimates for 1878–'79.

While European nations are expending large sums of money in the construction of armored vessels of great variety of type, it is not deemed advisable at this time to increase our Navy in this direction.

We find that in many instances ships have been laid aside as useless because of their peculiar construction, and others are being built which may share the same fate. We can profit by the experience of other nations while the transition from unarmored and sailing to armored and mastless ships is going on.

I would respectfully call your attention to the corps of naval constructors. Experience has proved the importance of limiting the number of these officers, and I would suggest that their number be limited by law to nine, and the number of assistant naval constructors to eight; all constructors now having commissions to retain them, and no others to be appointed until the number is below that specified.

The efficiency of assistant naval constructors would be greatly promoted by making them commissioned officers and they would be relieved from the uncertainty of the tenure by which they now hold office.

I desire also to call your attention to the present uncertain method of fitting young men for the position of assistant naval constructors, or rather the want of a method, and would suggest the creation of a corps of cadet naval constructors, admission to the corps to depend upon a competitive examination of candidates not over twenty-one years of age, a prerequisite to such examination being such knowledge of the practice of ship-building as may be obtained by actually working at the business for at least three years, not more than two candidates to be selected from the number presenting themselves biennially. The cadet constructors to pass three years at the Naval Academy in obtaining a knowledge of the theory of naval architecture, and to have facilities for studying such other branches as may be required to fit them for usefulness in their profession. After this course of study they should be sent to a navy-yard to assist the naval constructor in all work in his department, and in the absence of both naval constructor and assistant naval constructor to have charge of construction department. At the expiration of two years to be sent to sea on a cruising-ship for one year, at the end of which time to be examined for the position of assistant naval constructor; if the examination is satisfactory, to be appointed to the

first vacancy in the corps, and, while waiting for a vacancy, to be employed in assisting the naval constructor in a navy-yard, still retaining his title of cadet constructor.

I would call your attention to the reports received at various times of depredations on our live-oak lands, and to prevent the loss of this valuable timber I would suggest that agents be appointed, as in former years, to see that these reservations are properly cared for. The expense attending this service is included in the estimates for the year.

All of which is respectfully submitted.

J. W. EASBY,
Chief of Bureau.

Hon. R. W. THOMPSON,
Secretary of the Navy.

NO. —. STATEMENTS OF INDEBTEDNESS.

Indebtedness of Bureau of Construction and Repair.

General object.	Date of bill.	Detailed objects of expenditure, and explanations.	Estimated amount which will be required for each detailed object of expenditure.	Total amount to be appropriated under each head of appropriation.	Amount appropriated for the current fiscal year ending June 30, 1877.
Construction and Repair, 1876–'77.					
Anthony & Co	1877, Jan. 24	Sundries		$122 30	
Bashor & Co	1876, Nov. 24	Timber	$4, 321 76		
Do	1876, Dec. 7	do	4, 049 01		
Do	1876, Dec. 22	do	3, 757 67		
Do	1876, Dec. 23	do	4, 934 21		
Do	1877, Mar. 7	do	2, 682 57		
Do	1876, Nov. 13	do	3, 768 36		
Do	1876, Oct. 3	do	6, 012 93		
				29, 526 51	
Bridgewater Iron Co.	1877, Apr. 12	Iron		52 00	
Brown, S. P	1877, Mar. 13	Timber	1, 098 24		
Do	1877, Feb. 27	do	2, 016 05		
				3, 114 29	
Burgess, Phineas	1876, Oct. 21	Third payment on account of United States ship Monadnock.	19, 521 00		
Do	1876, Oct. 21	Fourth payment on account of United States ship Monadnock.	19, 521 00		
Do	1876, Dec. 9	Fifth payment on account of United States ship Monadnock.	19 '521 00		
Do	1877, Jan. 24	Sixth payment on account of United States ship Monadnock.	19, 521 00		
Do	1877, Feb. 9	Seventh payment on account of United States ship Monadnock.	19, 521 00		
Do	1877, Mar. 3	Eighth payment on account of United States ship Monadnock.	19, 521 00		
Do	1877, Mar. 3	Ninth payment on account of United States ship Monadnock.	19, 521 00		
Do	1877, Feb. 9	For extra work on account of United States ship Monadnock.	2, 000 00		
Do	1877, Jan. 25	For freight on account of United States ship Monadnock.	508 45		
Do	1875, Dec. 20	For twentieth payment on account of United States ship Camanche.	12, 500 00	151, 655 45	

Indebtedness of Bureau of Construction and Repair—Continued.

General object.	Date of bill.	Detailed objects of expenditure, and explanations.	Estimated amount which will be required for each detailed object of expenditure.	Total amounts to be appropriated under each head of appropriation.	Amount appropriated for the current fiscal year ending June 30, 1877.
Construction and Repair, 1876–'77.					
Bigler, J. & Co	1877, Mar. 6	Timber	$13,901 10		
Do	1877, Mar. 6	do	4,856 98		
Do	1877, Mar. 6	do	6,425 30		
				$25,183 38	
Do	1877, Mar. 6			9,617 52	$42,191 96
Do	1877, Mar. 6			7,391 06	
Buker, J. W	1877, Feb. 6	Sundries		196 38	
Cramp & Sons	1876, Jan. 29	First and second payments on account of United States ship Terror.	24,800 00		
Do	1876, Oct. 19	Freight on scrap-iron	2,144 55		
				26,944 55	
Chase, C. M	1876, Dec. 5	Sundries		45 10	
Creed, George H	1877, Apr. 2	do	575 25		
Do	1877, Mar. 19	do	228 80		
Do	1877, Feb. 16	do	363 95		
Do	1877, Feb. 13	do	31 80		
Do	1877, Mar. 2	do	31 20		
Do	1877, Mar. 1	do	389 00		
Do	1877, Mar. 1	do	1,379 75		
Do	1877, Mar. 7	do	153 65		
Do	1877, Mar. 7	do	27 50		
Do	1877, Mar. 7	do	1,130 10		
Do	1877, Jan. 27	do	14 53		
Do	1877, Jan. 27	do	87 50		
Do	1877, Jan. 27	do	180 00		
Do	1877, Jan. 27	do	146 20		
Do	1877, Jan. 27	do	5 00		
Do	1877, Feb. 2	do	230 15		
Do	1877, Feb. 2	do	76 78		
Do	1877, Jan. 13	do	325 68		
Do	1877, Jan. 12	do	95 53		
Do	1877, Jan. 12	do	65 00		
Do	1877, Jan. 13	do	6 00		
Do	1877, Jan. 13	do	290 52		
Do	1876, Dec. 27	do	13 50		
Do	1876, Dec. 27	do	449 20		
Do	1876, Dec. 27	do	87 84		
Do	1876, Nov. 18	do	59 37		
Do	1876, Dec. 13	do	72 00		
Do	1876, Dec. 14	do	201 60		
Do	1876, Dec. 13	do	156 30		
Do	1876, Dec. 13	do	141 90		
Do	1876, Nov. 9	do	1,665 50		
Do	1876, Nov. 8	do	23 15		
Do	1876, Nov. 8	do	96 00		
Do	1876, Nov. 8	do	220 00		
Do	1876, Oct. 7	do	96 20		
Do	1876, Oct. 7	do	1,380 00		
Do	1876, Oct. 7	do	4,710 73		
Do	1876, Oct. 7	do	2,787 90		
Goff, George P	1877, Mar. 27	do		585 52	
Griffiths, J. W	1876, Mar. 27	For labor in building United States ship Enterprise.	1,612 00		
Do	1877, Feb. 28	For extras in building United States ship Enterprise.	3,519 15		
				5,131 15	
Harlan & Hollingsworth Company.	1877, Feb. 28	First, second, and third payments on account United States ship Amphitrite.	46,500 00		
Do	1877, Feb. 28	Fourth, fifth, sixth, and seventh payments on account United States ship Amphitrite.	62,000 00		
Do	1877, Feb. 28	Eighth, ninth, and tenth payments on account United States ship Amphitrite.	37,200 00		
Do		Reservation due on account United States ship Amphitrite (bill not made out yet).	9,300 00		

Indebtedness of Bureau of Construction and Repair—Continued.

General object.	Date of bill.	Detailed objects of expenditure, and explanations.	Estimated amount which will be required for each detailed object of expenditure.	Total amount to be appropriated under each head of appropriation.	Amount appropriated for the current fiscal year ending June 30, 1877.
Construction and Repair, 1876–'77.					
Harlan & Hollingsworth Company.	1877, Feb. 28	New materials on account United States ship Amphitrite.	$24, 889 87		
Do	1877, Feb. 28	Balance due on account United States ship Ranger.	50, 000 00		
Do	1876, Dec. 20	Extra work on account United States ship Ranger.	2, 842 94		
Do	1877, Jan. 19	Timber-head for account United States ship Jason.	31 00		
				$232, 763 81	
Hatch & Co	1876, Sept. 12	Timber	7, 015 66		
Do	1876, Sept. 22	do	2, 323 71		
Do	1876, Sept. 11	do	7, 184 97		
Do	1876, Dec. 22	do	1, 905 88		
Do	1876, Dec. 22	do	2, 604 00		
Hatch, Loud & Co	1876, Sept. 22	do	2, 623 53		
Do	1876, Sept. 11	do	4, 728 95		
Do	1876, Oct. 10	do	7, 415 48		
Do	1876, Dec. 22	do	3, 100 00		
Do	1876, Dec. 26	do	11, 100 00		
Do	1876, Dec. 26	do	5, 400 00		
Do	1877, Jan. 31	do	7, 020 00		
Do	1877, Jan. 31	do	8, 010 00		
Do	1877, Jan. 31	do	3, 465 00		
Do	1877, Jan. 31	do	4, 005 00		
Do	1877, Mar. 3	do	4, 165 24		
Do	1877, Mar. 3	do	2, 550 00		
Do	1877, Mar. 3	do	6, 576 97		
				91, 194 39	
Jewett, E. H	1877, Jan. 6	do		5, 084 40	
Knowlton, J. L	1876, Oct. 5	Tools	2, 150 00		
Do	1876, Sept. 21	do	2, 150 00		
				4, 300 00	
Lindsay, A. H	1877, Jan. 20	Timber		7, 830 51	
Manton, Jos. L	1877, Feb. 1	Steam windlass		5, 900 00	
McKay, Donald	1877, Feb. 20	Balance due on account of United States ship Adams.	796 18		
Do	1877, Feb. 20	Extra work due on account United States ship Adams.	5, 865 66		
Do	1877, Feb. 20	Extra work due on account United States ship Essex.	2, 196 83		
				8, 858 67	
McKay, Nathaniel	1877, Feb. 9	Extra work due on account United States ship Phlox.		4, 400 00	
McCullough, A. A	1876, Aug. 26	Timber	994 03		
Do	1876, Dec. 16	do	3, 281 00		
Do	1876, Dec. 23	do	2, 427 84		
				6, 702 87	
New Jersey Navigation Company.	1876, Mar. 16	Charter of United States ship Burlington.	3, 000 00		
Do	1876, Apr. 18	do	1, 000 00		
				4, 000 00	
Place, George	1877, Feb. 13	Machinery		23, 710 00	
Phelps Manufacturing Company.	1877, Feb. 1	Sundries		334 60	
Rowland, T. F	1876, Dec. 6	Insurance of United States ship Catskill.	8, 000 00		
Do	1877, Mar. 15	Turret lifts of United States ship Monadnock.	3, 000 00		
				11, 000 00	
Raymond, C. H	1876, Dec. 29	Coal		3, 451 50	
Rider & Cotton	1877, Mar. 12	Sundries		184 77	
Roach John	1876, Aug. 16	Tenth payment on account of United States ship Puritan, in frame.	12, 400 00		
Do	1877, Apr. 13	Tenth payment on account of United States ship Puritan, continuing work.	16, 560 00		
Do	1876, Aug. 16	Reservation on account of United States ship Puritan.	31, 000 00		

Indebtedness of Bureau of Construction and Repair—Continued.

General object.	Date of bill.	Detailed objects of expenditure, and explanations.	Estimated amount which will be required for each detailed object of expenditure.	Total amount to be appropriated under each head of appropriation.	Amount appropriated for the current fiscal year ending June 30, 1877.
Construction and Repair, 1876–'77.					
Roach, John	1877, Mar. 3	Reservation on account of United States ship Puritan.	$4,464 77		
Do	1877, Apr. 13	Cutting up the old Puritan.	6,000 00		
Do	1876, Nov. 10	First payment on account of United States ship Miantonomoh.	31,365 00		
Do	1876, Nov. 10	Second payment on account of United States ship Miantonomoh.	31,365 00		
Do	1876, Nov. 10	Third payment on account of United States ship Miantonomoh.	31,365 00		
Do	1876, Dec. 7	Fourth payment on account of United States ship Miantonomoh.	31,365 00		
Do	1877, Feb. 9	Fifth payment on account of United States ship Miantonomoh.	31,365 00		
Do	1877, Feb. 9	Sixth payment on account of United States ship Miantonomoh.	31,365 00	$258,614 77	
Savage, Jos. L	1876, Dec. 16	White-oak knees		268 00	
Santos, M. A. & C. A	1877, Jan. 17	Sundries	65 00		
Do	1877, Feb. 2	do	90 00	155 00	
Steele, W. F	1876, Oct. 5	Balance due for plumbing, United States ship Quinnebaug.		3,400 00	
Stevens, S. A., & Co	1876, Dec. 26	Sundries		131 69	
Smith, F. A	1877, Mar. 1	Live-oak timber	13,411 83		
Do	1877, Mar. 1	do	2,037 80		
Do	1877, Mar. 1	do	38,381 12	53,830 75	
Trickey, John	1877, Mar. 29	Timber	249 00		
Do	1877, Feb. 27	do	967 67		
Do	1877, Feb. 27	do	520 70		
Do	1876, Nov. 25	do	1,874 70		
Do	1876, Nov. 16	do	349 85		
Do	1876, Nov. 24	do	2,752 92		
Do	1876, Dec. 7	do	766 18	7,481 02	
Tatham Bros	1876, Oct. 5	Sundries		128 43	
Taylor, Elliot & Co	1877, Jan. 27	do		89 97	
Torrey, W. A	1877, Mar. 9	do		76 00	
Vanderbilt, H. S	1876, Nov. 27	Timber	2,752 32		
Do	1877, Feb. 21	do	6,489 36		
Do	1877, Feb. 21	do	2,489 15		
Do	1877, Feb. 21	do	2,478 68	14,209 51	
White, E. V., & Co	1876, Aug. 18	Sundries	82 20		
Do	1876, Dec. 19	do	90 00		
Do	1876, Dec. 12	do	88 00		
Do	1877, Jan. 26	do	4 20		
Do	1877, Jan. 26	do	47 18		
Do	1877, Jan. 30	do	40 20	351 78	
White, W	1877, Mar. 27	Timber		18,389 10	
Wood & Dialogue	1876, Sept. 25	Repairs done to the United States ship Mayflower.	4,781 56		
Do	1876, Sept. 25	do	5,532 95		
Do	1876, Oct. 14	Repairs done to the United States ship Constitution.	5,000 00		
Do	1877, Jan. 6	do	5,000 00	20,314 51	
Walton Bros	1877, Mar. 2	Sundries		18 00	
Due on account of pay-rolls.		At the navy-yard, Portsmouth, for the month of February, 1876.	2,002 28		
Do		At the navy-yard, Portsmouth, for the month of March, 1876.	1,972 42		

Indebtedness of Bureau of Construction and Repair—Continued.

General object.	Date of bill.	Detailed objects of expenditure, and explanations.	Estimated amount which will be required for each detailed object of expenditure.	Total amount to be appropriated under each head of appropriation.	Amount appropriated for the current fiscal year ending June 30, 1877.
Construction and Repair, 1876–'77.					
Due on account of pay-rolls.	.....	At the navy-yard, Portsmouth, for the month of April, 1876.	$1,605 74	$5,581 44	
Do	.....	At the navy-yard, New York, for the month of February, 1876.	14,254 56		
Do	.....	At the navy-yard, New York, for the month of March, 1876.	6,928 70	21,183 26	
Do	.....	At the navy-yard, League Island, for the month of March, 1876.	.....	1,185 06	
		Due for work on double-turreted monitors under agreements of—			
Burgess, Phineas	1875, Oct. 2	On account of United States ship Monadnock.	.....	41,211 00	
Cramp, W., & Sons	1875, Apr. 5	On account of United States ship Terror.	.....	55,800 00	
Roach, John	1876, Sept. 29	On account of United States ship Miantonomoh.	.....	160,310 00	
				257,321 00	
		Claims known to exist under orders from the bureau.			
Providence Steam-Engine Company.	1876, Oct. 25	One steam windlass	5,800 00		
Do	1876, Oct. 25	One steam steering-machine	7,300 00		
A. M. Ingersoll	1877, Jan. 25	Ten life-boats	15,000 00		
American Windlass Company.	1877, Feb. 24	One steam windlass	6,200 00	34,300 00	
		Claims presented but unadjusted, on file in bureau.			
W. B. Reamy, agent	1874, July —	Use of boat-davits on Lehigh.	200 00		
Do	1874, July —	Use of boat-davits on Canonicus.	200 00		
J. K. Frothingham	1874, —— —	Metallic packing on Intrepid.	1,250 00		
Seyfert, McManus & Co.	——, —— —	Iron delivered at League Island.	29,674 92		
T. F. Rowland	1875, —— —	Loading frame of Monadnock.	1,386 48		
Do	1875, —— —	Riveting frame of Monadnock.	1,512 48		
John Roach	1876, Feb. —	Extras on account of Ranger	250 00		
Wood & Dialogue (J. H. Dialogue).	1877, Jan. —	Deck-house on Constitution	1,000 00		
Do	1877, Jan. —	Extra labor on Constitution	3,948 56	39,422 43	
Nathaniel McKay	1875, —— —	Removing materials from Philadelphia to League Island, expenses incurred by delay.	.....	2,500 00	
				41,922 43	$1,426,228 13

Estimates of appropriations required for the service of the fiscal year ending June 30, 1879, by the Bureau of Construction and Repair.

Detailed objects of expenditure, and explanations.	Estimated amount which will be required for each detailed object of expenditure.	Amount appropriated for the current fiscal year ending June 30, 1878.
SALARIES.		
Chief clerk, per act of March 3, 1877 (19 Stats. at L., p. 312; R. S., p. 69, sec. 416)	$1,800 00	.....
Draughtsman, per act of March 3, 1877 (19 Stats. at L., p. 312; R. S., p. 69, sec. 416)	1,800 00	.....
One clerk of class four, per act of March 3, 1877 (19 Stats. at L., p. 312)	1,800 00	.....
One clerk of class three, per act of March 3, 1877 (19 Stats. at L., p. 312)	1,600 00	.....
One clerk of class two, per act of March 3, 1877 (19 Stats. at L., p. 312)	1,400 00	.....
One messenger, per act of March 3, 1877 (19 Stats. at L., p. 312)	840 00	.....
One laborer, per act of March 3, 1877 (19 Stats. at L., p. 312)	720 00	.....
	9,960 00	$9,960 00
One clerk of class three (submitted)	1,600 00	.....
One clerk of class two (submitted)	1,400 00	.....
One assistant draughtsman (submitted)	1,600 00	.....
Increase of pay of chief clerk (submitted)	200 00	.....
	4,800 00	.....
CONTINGENT.		
Stationery and miscellaneous items (appropriated, vol. 19, p. 162)	800 00	400 00
CONSTRUCTION AND REPAIR OF VESSELS.		
Preservation of vessels on the stocks and in ordinary; purchase of materials and stores of all kinds; labor in navy-yards and on foreign stations; preservation of material; purchase of tools; wear, tear, and repair of vessels afloat, and for general care and protection of the Navy in the line of construction and repair; incidental expenses, namely, advertising and foreign postage, (appropriated, 19 Stats. at L., p. 389)	2,250,000 00	1,750,000 00
CIVIL ESTABLISHMENT.		
At the navy-yard, Kittery, Me.:		
One clerk to naval constructor	1,400 00	.....
One clerk of store-houses	1,300 00	.....
One draughtsman	1,600 00	.....
Three writers, each at $1,000 per annum	3,000 00	.....
	7,300 00	.....
At the navy-yard, Boston, Mass.:		
One clerk to naval constructor	1,400 00	.....
One clerk of store-houses	1,300 00	.....
One draughtsman	1,600 00	.....
Four writers, each at $1,000 per annum	4,000 00	.....
	8,300 00	.....
At the navy-yard, Brooklyn, N. Y.:		
One clerk to naval constructor	1,400 00	.....
One clerk of store-houses	1,300 00	.....
One draughtsman	1,600 00	.....
Four writers, each at $1,000 per annum	4,000 00	.....
	8,300 00	.....
At the navy-yard, League Island, Pa.:		
One clerk to naval constructor	1,400 00	.....
One clerk of store-houses	1,300 00	.....
One draughtsman	1,600 00	.....
Three writers, each at $1,000 per annum	3,000 00	.....
	7,300 00	.....
At the navy-yard, Washington, D. C.:		
One clerk to naval constructor	1,400 00	.....
One clerk of store-houses	1,300 00	.....
One draughtsman	1,600 00	.....
Three writers, each at $1,000 per annum	3,000 00	.....
	7,300 00	.....

Estimates of appropriations required for the service of the fiscal year ending June 30 1879, &c.—Continued.

Detailed objects of expenditure, and explanations.	Estimated amount which will be required for each detailed object of expenditure.	Amount appropriated for the current fiscal year ending June 30 1878.
CIVIL ESTABLISHMENT—Continued.		
At the navy-yard, Norfolk, Va.:		
One clerk to naval constructor	$1,400 00	.....
One clerk of store-houses	1,300 00	.....
One draughtsman	1,600 00	.....
Three writers, each at $1,000 per annum	3,000 00	.....
	7,300 00	.....
At the navy-yard, Pensacola, Fla.:		
One writer	1,000 00	.....
At the navy-yard, Mare Island, Cal.:		
One clerk to naval constructor	1,400 00	.....
One clerk of store-houses	1,300 00	.....
One draughtsman	1,600 00	.....
Three writers, each at $1,000 per annum	3,000 00	.....
	7,300 00	.....

Offers to furnish material for the Navy under the advertisement of the Bureau of Construction and Repair, of August 21, 1877, *at the navy-yard, Portsmouth, N. H.*

Class No. 4. White-oak plank:

Elisha H. Jewett	*$600 00
James & Abbott	640 00
A. A. McCullough	650 00
S. C. Carll	700 00
George T. Wallace	800 00

Class No. 13. White-pine plank, boards:

James & Abbott	*697 50
Elisha H. Jewett	700 00
A. A. McCullough	850 00
George A. Hammond	875 00
S. C. Carll	1,500 00

Class No. 15. White ash:

A. A. McCullough	*568 50
George C. Ludlam	585 00
Elisha H. Jewett	650 00
S. C. Carll	675 00
James & Abbott	699 00
George A. Hammond	897 00

Class No. 16. White-ash oars:

DeGrauw, Aymar & Co.	*82 94
George D. Putnam & Co.	86 71
Fred'k A. Southmayd	96 13
J. H. Walker	103 67
David Babcock & Co.	109 33
S. C. Carll	132 80

Class No. 18. Black Walnut, &c:

Elisha H. Jewett	*$540 00
A. A. McCullough	736 00
S. C. Carll	860 00
James & Abbott	891 00
George C. Ludlam	1,260 00

Class No. 25. Lignum-vitæ:

David Babcock & Co.	*148 50
H. Lissberger	153 00
Elisha H. Jewett	195 00
J. H. Walker	198 00
S. C. Carll	210 00
George D. Putnam & Co.	225 00

Class No. 32. Wrought iron, round and square:

H. Lissberger	*35 00
J. H. Walker	47 50
Bellah, Quigley & Co.	60 00
George D. Putnam & Co.	60 00
S. C. Carll	70 00

Class No. 33. Wrought iron, flat:

H. Lissberger	*67 00
J. H. Walker	97 00
Bellah, Quigley & Co.	106 50
George D. Putnam & Co.	121 50
S. C. Carll	140 00

*Accepted.

Class No. 35. Steel:

H. Lissberger	*$79 69
James D. Rowland	81 25
J. H. Walker	84 38
Midvale Steel Works	85 93
Bellah, Quigley & Co	96 87
George D. Putnam & Co.	100 00
S. C. Carll	118 00

Class No. 39. Iron cut nails:

H. Lissberger	*355 30
Bellah, Quigley & Co	398 10
J. H. Walker	402 00
Noblit, Brown, Noblit & Co	410 65
S. C. Carll	471 25

Class No. 42. Lead, pipe, sheet:

H. Lissberger	*807 30
Robert Leitch & Sons	897 00
Bellah, Quigley & Co	979 80
J. H. Walker	946 25
George D. Putnam & Co.	995 00
David Babcock & Co	995 50
S. C. Carll	1,173 00
James D. Rowland	1,173 00

Class No. 44. Tin:

H. Lissberger	*1,447 50
S. C. Carll	1,591 50
David Babcock & Co	1,647 00
George D. Putnam & Co.	1,656 00
Bellah, Quigley & Co	1,716 00
J. H. Walker	1,729 32
James D. Rowland	1,860 00

Class No. 48. Locks, hinges, &c.:

H. Lissberger	*491 75
J. H. Walker	579 30
J. W. Gaskill & Sons	894 58
Dell Noblit, jr	1,270 14
S. C. Carll	1,329 80

Class No. 49. Screws:

George D. Putnam & Co.	*212 00
Dell Noblit, jr	214 72
H. Lissberger	218 08
J. H. Walker	238 34
J. W. Gaskill & Sons	245 92
Bellah, Quigley & Co	252 68
S. C. Carll	445 94

Class No. 50. Files:

J. H. Walker	228 67
Joseph J. Walton	252 01
C. H. Wight	272 84
H. Lissberger	281 45
Dell Noblit, jr	289 28
J. W. Gaskill & Sons	314 21
George D. Putnam & Co.	317 13
Bellah, Quigley & Co	317 65
S. C. Carll	669 50

Class No. 52. Tools for ship's stores:

H. Lissberger	*$259 30
J. H. Walker	303 08
S. C. Carll	752 48

Class No. 53. Tools for yard use:

H. Lissberger	*214 15
George D. Putnam & Co.	773 18
J. H. Walker	837 60
S. C. Carll	1,171 15

Class No. 54. Hardware:

H. Lissberger	*622 46
J. H. Walker	759 40
George D. Putnam & Co.	859 90
S. C. Carll	1,173 25

Class No. 56. White lead:

H. Lissberger	*501 00
Bellah, Quigley & Co	548 75
Thomas S. Harrison	551 10
C. T. Raynolds & Co	557 50
U. S. White Lead Co	565 00
George D. Putnam & Co.	573 00
Joseph J. Walton	580 00
J. H. Walker	585 00
J. H. Baker	592 50
S. C. Carll	685 00
David Babcock & Co	687 50

Class No. 57. Zinc paints.

C. T. Raynolds & Co	*110 00
H. Lissberger	120 00
U. S. White Lead Co	130 00
Joseph J. Walton	130 00
George D. Putnam & Co.	138 00
J. H. Walker	140 00
Bellah, Quigley & Co	140 00
David Babcock & Co	155 00
C. A. Burgess	170 00
S. C. Carll	170 00
J. H. Baker	190 00

Class No. 58. Colored paints:

Thomas S. Harrison	*44 90
J. H. Walker	45 35
C. T. Raynolds & Co	47 45
J. H. Baker	51 00
Joseph J. Walton	54 25
Bellah, Quigley & Co	60 00
George D. Putnam & Co.	61 80
U. S. White Lead Co	64 80
David Babcock & Co	73 50
H. Lissberger	81 85
C. A. Burgess	86 25
S. C. Carll	147 25

Class No. 60. Varnish, &c.:

H. Lissberger	*490 50
C. T. Raynolds & Co	497 00
U. S. White Lead Co	508 00
J. H. Walker	513 00
David Babcock & Co	536 00
George D. Putnam & Co.	539 50
A. W. Pratt & Co	549 50
S. C. Carll	623 00
C. A. Burgess	631 50

* Accepted.

Class No. 63. Sperm and lard oil:

George D. Putnam & Co.	*$828 00
H. Lissberger	852 00
David Babcock & Co	864 00
U. S. White Lead Co	870 00
J. H. Walker	948 00
C. A. Burgess	960 00
S. C. Carll	990 00

Class No. 68. Glass:

E. F. Holbrook & Bros	*285 50
J. H. Walker	299 00
U. S. White Lead Co	314 00
George D. Putnam & Co.	335 00
S. C. Carll	439 00
C. A. Burgess	537 00

Class No. 69. Brushes:

H. Lissberger	*230 50
J. H. Walker	240 25
George D. Putnam & Co.	294 25
U. S. White Lead Co	355 30
C. A. Burgess	384 50
S. C. Carll	564 50

Class No. 70. Dry goods:

J. H. Walker	*410 76
H. Lissberger	430 49
Noblit, Brown, Noblit & Co	484 90
S. C. Carll	587 10

Class No. 71. Stationery:

Willis G. Myers	*287 70
William H. Dempsey	302 75
W. B. Buzzell & Son	331 25

Class No. 73. Ship-chandlery:

H. Lissberger	*179 50
George D. Putnam & Co.	244 50
S. C. Carll	257 25
J. H. Walker	266 00

Class No. 74. Acids:

H. Lissberger	*$90 00
U. S. White Lead Co	140 00
J. H. Walker	170 00
George D. Putnam & Co.	180 00
S. C. Carll	480 00

Class No. 77. Belting, &c.:

Stephen Ballard & Co	*223 57
George D. Putnam & Co.	223 80
J. H. Walker	245 30
H. Lissberger	263 00
William A. Torry & Co	266 95
S. C. Carll	495 00

Class No. 78. Leather:

Stephen Ballard & Co	*90 00
H. Lissberger	97 50
George D. Putnam & Co.	97 50
J. H. Walker	103 50
S. C. Carll	135 00

Class No. 85. Anthracite coal:

David Babcock & Co	*2,418 00
John Street & Co	2,610 00
C. E. Walker & Co	2,640 00
William K. Clampffer, jr.	2,664 00
Samuel G. French	2,844 00
George D. Putnam & Co.	3,360 00

Class No. 87. Bituminous coal:

David Babcock & Co	*2,440 00
Johnson Bros	2,445 00
Samuel G. French	2,445 00
John Street & Co	2,625 00
C. E. Walker & Co	2,650 00
George D. Putnam & Co.	3,500 00

Opened in presence of—
J. W. EASBY, *Chief of Bureau.*
H. A. GOLDSBOROUGH, *Chief Clerk.*
THOMAS J. LASIER, *Clerk.*

NAVY DEPPARTMENT,
BUREAU OF CONSTRUCTION AND REPAIR, *September* 25, 1877.

Offer to furnish material for the Navy under the advertisement of the Bureau of Construction and Repair of August 21, 1877, *at the navy-yard, Boston, Mass.*

Class No. 13. White-pine plank, boards:

Geo. D. Putnam & Co	*$2,791 00
A. A. McCullough	3,062 50
James & Abbott	3,085 00
John F. Quigley	3,195 00
Watson & Pittinger	3,350 00
John Trickey	3,375 00
Geo. C. Ludlam	3,385 00
Elisha H. Jewett	4,250 00
S. C. Carll	4,950 00

Class No. 15. White ash, elm, beech:

Geo. D. Putnam & Co	*$312 00
A. A. McCullough	360 00
Geo. C. Ludlam	360 00
Elisha H. Jewett	400 00
John Trickey	400 00
James & Abbott	432 00
Watson & Pittinger	440 00
S. C. Carll	480 00

* Accepted.

Class No. 16. White-ash oars:

Geo. D. Putnam & Co...	*$147 00
DeGrawn, Aymar & Co.	165 00
J. H. Walker.....	180 00
David Babcock & Co....	187 50
Fred'k A. Southmayd...	191 25
S. C. Carll.....	270 00

Class No. 18. Black walnut, &c.:

Elisha H. Jewett.....	*1,680 00
A. A. McCullough.....	2,305 00
James & Abbott.....	2,380 00
John Trickey.....	2,394 00
Geo. D. Putnam & Co...	2,460 00
S. C. Carll.....	2,505 00
Watson & Pittinger....	2,585 00
John F. Quigley.....	2,590 00
Geo. C. Ludlam.....	2,730 00

Class No. 25. Lignumvitæ:

H. Lissberger.....	*504 00
Geo. D. Putnam & Co...	516 00
Elisha H. Jewett.....	540 00
J. H. Walker.....	544 00
John Trickey.....	545 00
David Babcock & Co....	549 00
S. C. Carll.....	550 00

Class No. 35. Steel:

Geo. D. Putnam & Co....	*1,154 15
David Babcock & Co....	1,175 75
J. H. Walker.....	1,179 50
H. Lissberger.....	1,265 87
James D. Rowland.....	1,280 50
Midvale Steel Works.....	1,354 37
J. A. Caldwell.....	1,428 25
Henry B. Jackson.....	1,428 25
Bellah, Quigley & Co....	1,526 75
Geo. Dunbar & Co.....	1,526 75
S. C. Carll.....	1,773 00

Class No. 38. Iron wrought-nails:

J. A. Caldwell.....	*13 80
J. H. Walker.....	14 70
Noblit, Brown, Noblit & Co.....	15 00
S. C. Carll.....	18 00
H. Lissberger.....	42 00
Bellah, Quigley & Co....	66 00

Class No. 39. Iron cut nails:

Geo. D. Putnam & Co....	*158 50
H. Lissberger.....	159 00
J. H. Walker.....	171 25
J. A. Caldwell.....	172 00
Bellah, Quigley & Co...	177 00
Noblit, Brown, Noblit & Co	192 00
S. C. Carll.....	217 50

Class No. 42. Lead, pipe, sheet:

H. Lissberger.....	*585 00
Robt. Leitch & Sons....	650 00
J. H. Walker.....	658 75
Geo. D. Putnam & Co...	666 25
David Babcock & Co....	$690 00
Bellah, Quigley & Co....	700 00
George Dunbar & Co....	750 00
J. A. Caldwell.....	750 00
James D. Rowland.....	800 00
S. C. Carll.....	800 00

Class No. 48. Locks, hinges, &c:

H. Lissberger.....	*334 35
J. H. Walker.....	500 82
George D. Putnam & Co.	510 20
S. C. Carll.....	768 80
J. W. Gaskill & Sons....	750 77
J. A. Caldwell.....	944 50
Dell Noblit, jr.....	1,395 15

Class No. 49. Screws:

George D. Putnam & Co.	*463 90
H. Lissberger.....	516 40
J. H. Walker.....	540 40
J. W. Gaskill & Sons....	542 30
J. A. Caldwell.....	544 53
Bellah, Quigley & Co....	558 45
Dell Noblit, jr.....	632 39
George Dunbar & Co....	671 55
S. C. Carll.....	685 00

Class No. 50. Files:

J. H. Walker.....	*215 35
George D. Putnam & Co.	218 10
H. Lissberger.....	257 65
C. H. Wight.....	259 05
Dell Noblit, jr.....	275 90
J. W. Gaskill & Sons....	286 15
Joseph J. Walton.....	286 85
Bellah, Quigley & Co....	299 40
George Dunbar & Co....	326 40
Isaac M. Walton.....	350 00
S. C. Carll.....	400 50
J. A. Caldwell.....	435 15

Class No. 52. Tools for ship stores:

H. Lissberger.....	*253 60
S. C. Carll.....	399 40
J. H. Walker.....	416 94
George D. Putnam & Co.	439 72
J. A. Caldwell.....	548 52

Class No. 53. Tools for yard use:

H. Lissberger.....	*2,990 25
George D. Putnam & Co.	3,311 20
J. H. Walker.....	3,794 17
J. A. Caldwell.....	3,826 60
George Dunbar & Co....	4,034 23
S. C. Carll.....	4,311 90

Class No. 54. Hardware:

J. H. Walker.....	*433 77
H. Lissberger.....	436 13
George D. Putnam & Co.	448 20
J. A. Caldwell.....	556 21
S. C. Carll.....	944 86

* Accepted.

Class No. 56. White lead:

H. Lissberger	*$1,065 00
J. H. Walker	1,087 50
Thomas S. Harrison	1,122 00
Bellah, Quigley & Co	1,125 00
George D. Putnam & Co	1,125 00
U. S. White Lead Co	1,140 00
C. T. Raynolds & Co	1,162 50
J. H. Baker	1,200 00
J. A. Caldwell	1,275 00
David Babcock & Co	1,275 00
S. C. Carll	1,350 00
George Dunbar & Co	1,425 00

Class No. 58. Colored paints:

George D. Putnam & Co.	*240 50
Thomas S. Harrison	243 90
J. H. Baker	258 00
J. H. Walker	263 13
H. Lissberger	265 50
C. T. Raynolds & Co	268 75
U. S. White Lead Co	272 00
David Babcock & Co	295 00
C. A. Burgess	302 12
Bellah, Quigley & Co	303 00
George Dunbar & Co	328 62
J. A. Caldwell	333 00
S. C. Carll	363 00

Class No. 59. Linseed oil:†

J. A. Caldwell	1,375 00
George D. Putnam & Co.	*1,375 00
H. Lissberger	1,450 00
David Babcock & Co	1,475 00
J. H. Walker	1,487 50
U. S. White Lead Co	1,500 00
C. T. Raynolds & Co	1,500 00
C. S. Wertsner	1,575 00
S. C. Carll	1,575 00
Bellah, Quigley & Co	1,625 00

Class No. 60. Varnish, &c.:

George D. Putnam & Co.	*1,025 00
J. H. Walker	1,028 00
C. T. Raynolds & Co	1,040 00
U. S. White Lead Co	1,055 00
A. W. Pratt & Co	1,072 00
J. A. Caldwell	1,080 00
David Babcock & Co	1,120 00
Bellah, Quigley & Co	1,120 00
C. A. Burgess	1,145 00
H. Lissberger	1,146 00
C. S. Wertsner	1,325 00
S. C. Carll	1,650 00

Class No. 63. Sperm and lard-oil:

Geo. D. Putnam & Co	*516 00
U. S. White Lead Co	560 00
J. A. Caldwell	560 00
David Babcock & Co	564 00
H. Lissberger	576 00
J. H. Walker	620 00
C. A. Burgess	640 00
S. C. Carll	640 00

Class No. 64. Tallow, soap:

Geo. D. Putnam & Co	*$134 00
J. H. Walker	141 50
H. Lissberger	150 00
David Babcock & Co	150 00
Geo. Dunbar & Co	161 25
J. A. Caldwell	163 75
S. C. Carll	172 00

Class No. 68. Glass:

Geo. D. Putnam & Co	*193 31
E. F. Holbrook & Bros	205 68
J. H. Walker	211 22
Bellah, Quigley & Co	212 79
U. S. White Lead Co	229 70
C. S. Wertsner	263 71
J. A. Caldwell	284 63
H. Lissberger	354 75
S. C. Carll	366 89
C. A. Burgess	390 23

Class No. 69. Brushes:

Geo. D. Putnam & Co	*517 75
J. H. Walker	517 80
H. Lissberger	606 75
C. S. Wertsner	723 60
J. A. Caldwell	869 06
U. S. White Lead Co	882 50
Geo. Dunbar & Co	1,028 63
J. H. Baker	1,069 80
S. C. Carll	1,099 50

Class No. 70. Dry goods:

J. H. Walker	*488 30
Geo. Dunbar & Co	533 37
S. C. Carll	624 25
Noblit, Brown, Noblit & Co	666 45
J. A. Caldwell	857 30

Class No. 1. Stationery:

William H. Dempsey	*353 22
J. A. Caldwell	428 09

Class No. 73. Ship-chandlery:

J. A. Caldwell	*383 50
George D. Putnam & Co.	433 75
J. H. Walker	452 00
H. Lissberger	475 50
George Dunbar & Co	556 00

Class No. 74. Acids:

H. Lissberger	*40 00
J. A. Caldwell	42 50
U. S. White Lead Co	50 00
George D. Putnam & Co.	60 00
J. H. Walker	65 00
S. C. Carll	200 00

Class No. 75. Rosin, pitch, &c.:

H. Lissberger	*87 50
J. A. Caldwell	137 50
J. H. Walker	147 50
S. C. Carll	150 00
George D. Putnam & Co.	162 50

* Accepted.

† Decided by lot.

Class No. 77. Belting, packing:

J. A. Caldwell	*$2,263 94
George D. Putnam & Co.	2,425 34
J. H. Walker	2,472 32
H. Lissberger	2,537 93
Stephen Ballard & Co.	2,775 42
George Dunbar & Co.	2,887 02
William A. Torry & Co.	2,914 93
Isaac M. Walton	3,185 14
S. C. Carll	4,069 87

Class No. 78. Leather:

J. H. Walker	*10 80
J. A. Caldwell	14 25
George Dunbar & Co.	14 25
H. Lissberger	$15 75
S. C. Carll	21 00
J. H. Baker	36 60

Class No. 85. Anthracite coal:

David Babcock & Co.	*2,418 00
John Street & Co.	2,550 00
William K. Clampffer, jr.	2,574 00
Samuel G. French	2,664 00
George D. Putnam & Co.	2,820 00

Class No. 88. Charcoal, coke:

David Babcock & Co.	*117 00
George D. Putnam & Co.	132 00
J. H. Walker	144 00

Opened in presence of—
J. W. EASBY, *Chief of Bureau.*
H. A. GOLDSBOROUGH, *Chief Clerk.*
THOMAS J. LASIER, *Clerk.*
NAVY DEPARTMENT,
BUREAU OF CONSTRUCTION AND REPAIR, *September* 25, 1877.

Offer to furnish material for the Navy, under the advertisement of the Bureau of Construction and Repair, of August 21, 1877, *at the navy-yard, New York.*

Class No. 9. Yellow-pine mast-timber:

S. C. Carll	*$12,228 00
William White	12,717 12
A. A. McCullough	20,380 00
Watson & Pittinger	22,825 60
James & Abbott	24,129 92
George T. Wallace	26,738 56

Class No. 16. White-ash oars:

George H. Creed	*660 00
DeGrawn, Aymer & Co.	750 00
J. H. Walker	825 00
David Babcock & Co.	862 50
Frederick A. Southmayd.	918 75
S. C. Carll	1,275 00
Robert J. Neeley	1,950 00
Watson & Pittinger	2,250 00

Class No. 22. Cypress, cedar:

Watson & Pittinger	*800 00
James & Abbott	830 00
George T. Wallace	900 00
A. A. McCullough	950 00
Robert J. Neeley	970 00
S. C. Carll	1,400 00

Class No. 23. Black spruce:

J. W. Gaskill & Sons	*2,587 95
Watson & Pittinger	3,470 00
David Babcock & Co.	4,168 00
James & Abbott	4,358 00
George A. Hammond	5,000 00

Class No. 32. Wrought iron, round and square:

George H. Creed	*$1,580 00
Bellah, Quigley & Co	1,700 00
H. Lissberger	1,735 00
J. H. Walker	1,912 50
S. C. Carll	3,300 00

Class No. 37. Iron spikes:

Dell Noblit, jr	*416 00
J. H. Walker	478 40
H. Lissberger	480 00
George H. Creed	496 00
David Babcock & Co.	540 00
S. C. Carll	560 00

Class No. 42. Lead, pipe, sheet:

H. Lissberger	*1,521 00
George H. Creed	1,605 00
David Babcock & Co.	1,617 50
J. H. Walker	1,657 50
Robert Leitch & Sons	1,690 00
Bellah, Quigley & Co.	1,755 00
S. C. Carll	1,950 00
James D. Rowland	2,080 00

Class No. 43. Zinc:

J. H. Walker	*575 00
George H. Creed	580 00
H. Lissberger	587 50
David Babcock & Co.	590 00
Bellah, Quigley & Co.	650 00
James D. Rowland	750 00
S. C. Carll	775 00

* Accepted.

Class No. 44. Tin:

George H. Creed	*$1,640 00
H. Lissberger	1,675 00
David Babcock & Co	1,725 00
J. H. Walker	2,000 00
S. C. Carll	2,000 00
Bellah, Quigley & Co	2,050 00
James D. Rowland	2,200 00

Class No. 48. Locks, hinges, &c:

H. Lissberger	*256 50
J. H. Walker	280 50
George H. Creed	363 00
J. W. Gaskill & Sons	482 70
Dell Noblit, jr	1,249 20
S. C. Carll	1,425 00

Class No. 49. Screws:

George H. Creed	*279 20
Dell Noblit, jr	353 52
S. C. Carll	354 20
H. Lissberger	364 40
J. H. Walker	372 10
Bellah, Quigley & Co	397 90
J. W. Gaskill & Sons	400 40

Class No. 50. Files:

George H. Creed	*617 50
J. H. Walker	726 10
Joseph J. Walton	766 70
C. H. Wight	826 10
H. Lissberger	838 20
Dell Noblit, jr	880 40
Bellah, Quigley & Co	927 40
J. W. Gaskill & Sons	949 50
Isaac M. Walton	1,123 00
S. C. Carll	1,430 00

Class No. 51. Augers:

H. Lissberger	*165 00
J. H. Walker	242 50
George H. Creed	256 00
Noblit, Brown, Noblit & Co	295 00
S. C. Carll	465 00

Class No. 52. Tools for ship-stores:

H. Lissberger	*818 75
George H. Creed	915 00
J. H. Walker	1,038 10
David Babcock & Co	1,186 90
S. C. Carll	1,430 10

Class No. 53. Tools for yard use:

George H. Creed	*980 00
David Babcock & Co	1,089 20
H. Lissberger	1,126 00
J. H. Walker	1,170 38
Joseph J. Walton	1,174 20
Noblit, Brown, Noblit & Co	$1,523 24
Isaac M. Walton	1,954 00
S. C. Carll	2,162 00

Class No. 54. Hardware:

George H. Creed	*1,103 70
J. H. Walker	1,253 37
H. Lissberger	1,641 75
David Babcock & Co	1,720 55
S. C. Carll	3,271 50

Class No. 56. White lead:

H. Lissberger	*2,150 00
George H. Creed	2,170 00
Thomas S. Harrison	2,219 00
George H. Burnett	2,250 00
Bellah, Quigley & Co	2,287 50
J. H. Walker	2,312 50
U. S. White Lead Co	2,340 00
C. T. Raynolds & Co	2,400 00
David Babcock & Co	2,495 00
Joseph J. Walton	2,500 00
S. C. Carll	2,750 00

Class No. 57. Zinc paints:

George H. Creed	*498 00
C. T. Raynolds & Co	550 00
J. H. Walker	550 00
Thomas S. Harrison	580 00
H. Lissberger	600 00
Joseph J. Walton	600 00
U. S. White Lead Co	625 00
David Babcock & Co	650 00
Bellah, Quigley & Co	662 50
S. C. Carll	775 00

Class No. 58. Colored paints: †

Class No. 59. Linseed oil:

George H. Creed	*2,112 00
H. Lissberger	2,280 00
J. H. Walker	2,340 00
David Babcock & Co	2,360 00
S. C. Carll	2,360 00
C. T. Raynolds & Co	2,400 00
U. S. White Lead Co	2,400 00

Class No. 60. Varnish, &c.: †

Class No. 63. Sperm and lard oil:

George H. Creed	*1,190 00
David Babcock & Co	1,290 00
H. Lissberger	1,400 00
U. S. White Lead Co	1,400 00
J. H. Walker	1,530 00
S. C. Carll	1,550 00

Class No. 64. Tallow, soap:

George H. Creed	*135 00
H. Lissberger	140 00
J. H. Walker	149 50
David Babcock & Co	161 00
S. C. Carll	185 0

* Accepted. † Class not awarded.

Class No. 68. Glass:

George H. Creed	*$234 50
E. F. Holbrook & Bros.	283 75
J. H. Walker	296 00
Bellah, Quigley & Co.	298 50
U. S. White Lead Co.	307 50
Walton Brothers	320 95
Edward A. Bond	329 20
S. C. Carll	550 50
H. Lissberger	720 00

Class No. 69. Brushes:

George H. Creed	*512 50
J. H. Walker	597 00
C. S. Wertsner	710 00
David Babcock & Co.	840 00
Bellah, Quigley & Co.	855 00
U. S. White Lead Co.	922 50
S. C. Carll	980 00

Class No. 70. Dry goods:

H. Lissberger	*420 40
George H. Creed	459 00
J. H. Walker	607 00
S. C. Carll	868 00
Noblit, Brown, Noblit & Co	876 80

Class No. 71. Stationery:

William H. Dempsey	*223 58
Arthur & Bonnell	283 35

Class No. 72. Crucibles:

George H. Creed	*155 00
J. H. Walker	155 44
Joseph J. Walton	174 00
Dell Noblit, jr.	188 50
H. Lissberger	188 50
David Babcock & Co.	197 75
Isaac M. Walton	232 00

Class No. 73. Ship-chandlery:

George H. Creed	*$1,558 30
J. H. Walker	1,819 50
H. Lissberger	1,867 40
David Babcock & Co.	1,957 50

Class No. 74. Acids:

George H. Creed	*30 00
H. Lissburger	32 50
U. S. White Lead Co.	37 50
J. H. Walker	43 12
David Babcock & Co.	53 75
S. C. Carll	150 00

Class No. 77. Belting, packing:

H. Lissberger	*108 00
George H. Creed	137 50
Stephen Ballard & Co.	192 00
J. H. Walker	216 00
Isaac M. Walton	240 00
William A. Torrey & Co.	336 00
S. C. Carll	420 00

Class No. 78. Leather:

H. Lissberger	*79 50
J. H. Walker	80 00
George H. Creed	87 50
Isaac M. Walton	97 50
S. C. Carll	105 00

Class No. 80. Junk: †

Class No. 85. Anthracite coal:

David Babcock & Co.	*4,071 00
George H. Creed	4,164 50
John Street & Co.	4,637 50
Samuel G. French	4,925 00
J. H. Walker	5,002 50

Opened in presence of—
J. W. EASBY, *Chief of Bureau.*
H. A. GOLDSBOROUGH, *Chief Clerk.*
THOMAS J. LASIER, *Clerk.*

NAVY DEPARTMENT,
BUREAU OF CONSTRUCTION AND REPAIR, *September* 25, 1877.

Offer to furnish material for the Navy under the advertisement of the Bureau of Construction and Repair, of August 21, 1877, *at the navy-yard, League Island.*

Class No. 9. Yellow-pine mast timber:

S. C. Carll	*$1,688 25
William White	1,800 80
A. A. McCullough	2,813 75
George T. Wallace	3,691 64

Class No. 18. Black walnut, &c.:

A. A. McCullough	*1,230 00
George C. Ludlam	1,315 00
S. C. Carll	1,465 00
J. W. Gaskill & Sons	1,505 00
Watson & Pittinger	1,630 00

Class No. 23. Black Spruce:

J. W. Gaskill & Sons	*$497 25
Watson & Pittinger	758 00
David Babcock & Co.	1,019 50
James & Abbott	1,195 00

Class No. 25. Lignum-vitæ:

H. Lissberger	*902 00
David Babcock & Co.	908 00
J. H. Walker	1,007 00
S. C. Carll	1,050 00
Watson & Pittinger	1,280 00
James & Abbott	1,298 00

* Accepted. † Class not awarded.

Class No 34. Iron, plate:

H. Lissberger	*$419 60
J. H. Walker	466 15
J. W. Gaskill & Sons	816 67
J. B. Shannon	900 22

Class No. 38. Iron wrought nails:

Noblit, Brown, Noblit & Co	*47 05
J. W. Gaskill & Sons	47 60
J. H. Walker	49 00
Jacob B. Shannon	118 00
H. Lissberger	132 00
Paul J. Field	146 00
Bellah, Quigley & Co	220 00

Class No. 39. Iron cut nails:†

Noblit, Brown, Noblit & Co	*165 30
J. W. Gaskill & Sons	165 30
Paul J. Field	181 00
J. B. Shannon	184 26
H. Lissberger	187 80
Bellah, Quigley & Co	190 24
J. H. Walker	210 70

Class No. 42. Lead, pipe, sheet:

Tatham Brothers	*2,182 40
Robert Leitch & Sons	2,410 00
Bellah, Quigley & Co	2,430 00
H. Lissberger	2,498 00
Paul J. Field	2,565 00
J. H. Walker	2,570 00
J. B. Shannon	2,708 00
J. W. Gaskill & Sons	2,742 65
David Babcock & Co	2,780 00
S. C. Carll	2,840 00
James D. Rowland	3,160 00

Class No. 43. Zinc:

H. Lissberger	*62 00
J. B. Shannon	63 92
Bellah, Quigley & Co	64 00
J. W. Gaskill & Sons	66 00
Paul J. Field	68 00
J. H. Walker	68 00
David Babcock & Co	72 00
James D. Rowland	76 00
S. C. Carll	80 00

Class No. 48. Locks, hinges, &c.:

J. H. Walker	*706 36
H. Lissberger	756 39
Dell Noblit, jr	1,109 31
Paul J. Field	1,206 62
J. B. Shannon	1,424 31
J. W. Gaskill & Sons	1,444 77
S. C. Carll	1,658 75

Class No. 49. Screws:

Dell Noblit, jr	*335 89
J. W. Gaskill & Sons	338 84
H. Lissberger	347 10
J. H. Walker	348 93
Paul J. Field	$376 24
Bellah, Quigley & Co	369 09
S. C. Carll	387 24
J. B. Shannon	407 87

Class No. 50. Files:

J. H. Walker	*568 07
C. H. Wight	680 75
H. Lissberger	715 16
J. B. Shannon	730 09
Dell Noblit, jr	733 41
Bellah, Quigley & Co	760 61
Paul J. Field	765 84
J. W. Gaskill & Sons	778 57
S. C. Carll	1,130 45

Class No. 52. Tools for ship's stores:

H. Lissberger	*40 20
J. H. Walker	44 34
J. B. Shannon	46 26
J. W. Gaskill & Sons	59 56
Noblit, Brown, Noblit & Co	60 36
Bellah, Quigley & Co	62 76
Paul J. Field	63 60
S. C. Carll	120 30

Class No. 53. Tools for yard use:

J. H. Walker	*477 63
J. B. Shannon	495 01
H. Lissberger	527 06
J. W. Gaskill & Sons	628 34
Paul J. Field	629 03
S. C. Carll	853 55

Class No. 54. Hardware:

H. Lissberger	(‡)
J. H. Walker	1 410 07
J. W. Gaskill & Sons	1,851 52
J. B. Shannon	1,888 18
Noblit, Brown, Noblit & Co	2,156 27
Paul J. Field	2,521 60
S. C. Carll	2,896 55

Class No. 56. White lead:

H. Lissberger	*365 00
Thomas S. Harrison	386 50
Bellah, Quigley & Co	403 12
United States White Lead Company	410 00
J. B. Shannon	424 50
C. T. Raynolds & Co	425 00
J. W. Gaskill & Sons	430 00
J. H. Walker	437 50
Robert Leitch & Sons	437 50
Joseph J. Walton	450 00
William Waterall & Co	462 50
Edward C. Street	475 00
David Babcock & Co	495 00
S. C. Carll	500 00

Class No. 58. Colored paints:

Thomas S. Harrison	*455 15
J. H. Walker	493 32
United States White Lead Company	530 65
J. B. Shannon	530 70

* Accepted. † Decided by lot. ‡ Informal.

C. S. Wertsner	$543 50
David Babcock & Co	552 30
C. T. Raynolds & Co	582 15
Bellah, Quigley & Co	623 70
Joseph J. Walton	639 50
J. W. Gaskill & Sons	652 32
Edward C. Street	694 80
H. Lissberger	704 35
William Waterall & Co	718 50
S. C. Carll	869 50

Class No. 60. Varnish, &c.:

H. Lissberger	*423 00
United States White Lead Company	441 00
C. T. Raynolds & Co	447 00
J. H. Walker	454 50
J. B. Shannon	459 00
S. C. Carll	468 00
Bellah, Quigley & Co	478 50
David Babcock & Co	478 50
J. W. Gaskill & Sons	484 50

Class No. 63. Sperm and lard oil:

J. B. Shannon	*260 00
Edward C. Street	274 00
H. Lissberger	280 00
United States White Lead Company	280 00
David Babcock & Co	298 00
J. H. Walker	312 00
C. T. Raynolds & Co	320 00
S. C. Carll	320 00

Class No. 64. Tallow, soaps:

H. Lissberger	*12 00
J. H. Walker	12 75
J. B. Shannon	13 50
Paul J. Field	21 50
S. C. Carll	24 00

Class No. 69. Brushes:

H. Lissberger	*29 25
J. H. Walker	32 50
Paul J. Field	67 00
S. C. Carll	80 00
J. B. Shannon	82 50
United States White Lead Company	149 00

Class No. 70. Dry-goods:

J. B. Shannon	*$434 80
J. H. Walker	463 15
H. Lissberger	472 40
Noblit, Brown, Noblit & Co	699 75
S. C. Carll	758 20

Class No. 71. Stationery:

J. B. Shannon	*335 55
Walstron & Stevens	488 25
William H. Dempsey	788 60

Class No. 73. Ship-chandlery.:

J. B. Shannon	*159 95
H. Lissberger	164 35
J. H. Walker	172 45
Paul J. Field	224 95
S. C. Carll	235 60

Class No. 75. Rosin, pitch, &c.:

H. Lissberger	*145 00
J. H. Walker	202 00
S. C. Carll	215 00
United States White-Lead Company	215 00
J. B. Shannon	220 00
Edward C. Street	230 00

Class No. 78. Leather:

J. H. Walker	*374 40
H. Lissberger	434 65
J. B. Shannon	480 15
S. C. Carll	579 50

Class No. 85. Anthracite coal:

David Babcock & Co	*1,136 25
Samuel G. French	1,361 25
William K. Clampffer, jr.	1,387 50

Class No. 87. Bituminous Coal.

John Street & Co	*585 00
Johnson Bros	589 50
Samuel G. French	666 00

Class No. 88. Charcoal, coke:

Paul J. Field	*95 00
J. H. Walker	122 50
J. B. Shannon	135 00

Opened in presence of—
J. W. EASBY, *Chief of Bureau.*
H. A. GOLDSBOROUGH, *Chief Clerk.*
THOMAS J. LASIER, *Clerk.*

NAVY DEPARTMENT,
BUREAU OF CONSTRUCTION AND REPAIR, *September* 25, 1877.

* Accepted.

Offer to furnish material for the Navy under the advertisement of the Bureau of Construction and Repair of August 21, 1877, at the navy-yard, Washington.

Class No. 39. Yellow-pine mast-timber.

S. C. Carll	*$2,165 25
William White	2,309 60
A. A. McCullough	3,608 75
James & Abbott	4,272 76
George T. Wallace	4,734 68

Class No. 22. Cypress, cedar:

Watson & Pittinger	*795 00
George T. Wallace	800 00
A. A. McCullough	825 00
James & Abbott	835 00
Robert J. Neely	960 00
S. C. Carll	1,400 00

Class No. 23. Black spruce:

J. W. Gaskill & Sons	*495 96
Watson & Pittinger	674 00
David Babcock & Co	839 50

Class No. 32. Wrought iron, round and square.

George P. Goff	*77 90
J. W. Gaskill & Sons	89 31
H. Lissberger	99 25
Bellah, Quigley & Co	104 00
J. H. Walker	113 50
S. C. Carll	205 00

Class No. 39. Iron cut-nails:

H. Lissberger	*12 00
George P. Goff	13 00
Noblit, Brown, Noblit & Co	13 75
Bellah, Quigley & Co	16 25
J. H. Walker	20 00
J. W. Gaskill & Sons	20 00
S. C. Carll	20 00

Class No. 44. Tin:

H. Lissberger	*405 50
Bellah, Quigley & Co	418 00
J. H. Walker	434 92
J. W. Gaskill & Sons	436 00
David Babcock & Co	448 00
James D. Rowland	458 00
George P. Goff	470 00
S. C. Carll	488 00

Class No. 48. Locks, hinges, &c.:

H. Lissberger	*41 60
George P. Goff	52 80
J. H. Walker	62 00
Dell Noblit, jr	76 00
J. W. Gaskill & Sons	159 56
S. C. Carll	296 00

Class No. 49. Screws:

George P. Goff	*$199 64
Dell Noblit, jr	206 04
H. Lissberger	208 97
J. H. Walker	209 88
Bellah, Quigley & Co	231 62
J. W. Gaskill & Sons	237 15
S. C. Carll	240 03

Class No. 50. Files:

H. Lissberger	*14 28
C. H. Wight	15 96
J. H. Walker	16 66
J. W. Gaskill & Sons	16 68
George P. Goff	17 32
Dell Noblit, jr	20 12
Bellah, Quigley & Co	23 98
S. C. Carll	31 24

Class No. 51. Augers:

H. Lissberger	*53 00
J. H. Walker	208 42
George P. Goff	211 18
Noblit, Brown, Noblit & Co	238 00
J. W. Gaskill & Sons	251 78
S. C. Carll	311 00

Class No. 52. Tools for ship's stores:

H. Lissberger	*71 00
George P. Goff	73 45
S. C. Carll	89 00
J. W. Gaskill & Sons	144 87
J. H. Walker	314 80

Class No. 53. Tools for yard use:

S. C. Carll	*64 56
H. Lissberger	83 70
J. H. Walker	224 46
J. W. Gaskill & Sons	275 37

Class No. 54. Hardware:

H. Lissberger	*301 78
J. H. Walker	449 70
S. C. Carll	566 95
J. W. Gaskill & Sons	758 25

Class No. 56. White lead:

H. Lissberger	*584 00
Thomas S. Harrison	616 00
George P. Goff	620 00
C. S. Wertsner	660 00
Bellah, Quigley & Co	670 00
C. T. Raynolds & Co	680 00
U. S. White Lead Co	680 00
Robert Leitch & Sons	700 00

* Accepted.

Francis Gudgin	$720 00
J. H. Walker	720 00
Joseph J. Walton	720 00
J. W. Gaskill & Sons	736 00
David Babcock & Co	840 00
S. C. Carll	840 00

Class No. 57. Zinc paints:

H. Lissberger	*260 00
Thomas S. Harrison	279 20
C. T. Raynolds & Co	280 00
Robert Leitch & Sons	300 00
Joseph J. Walton	320 00
C. S. Wertsner	340 00
J. H. Walker	340 00
U. S. White Lead Co	340 00
George P. Goff	350 00
Francis Gudgin	360 00
J. W. Gaskill & Sons	360 00
Bellah, Quigley & Co	365 06
David Babcock & Co	380 00
S. C. Carll	380 00

Class No. 58. Colored paints:

C. T. Raynolds & Co	*60 30
C. S. Wertsner	66 40
David Babcock & Co	68 30
Thomas S. Harrison	69 75
Bellah, Quigley & Co	69 85
H. Lissberger	74 05
U. S. White Lead Co	76 17
J. H. Walker	79 16
J. W. Gaskill & Sons	85 56
Francis Gudgin	101 50
Joseph J. Walton	102 40
S. C. Carll	136 05

Class No. 59. Linseed-oil:

H. Lissberger	*570 00
C. T. Raynolds & Co	600 00
U. S. White Lead Co	600 00
C. S. Wertsner	610 00
David Babcock & Co	610 00
J. W. Gaskill & Sons	610 00
Francis Gudgin	620 00
J. H. Walker	630 00
Bellah, Quigley & Co	650 00
S. C. Carll	650 00

Class No. 60. Varnish, &c.:

C. T. Raynolds & Co	*443 75
U. S. White Lead Co	474 20
J. H. Walker	477 50
A. W. Pratt & Co	500 90
David Babcock & Co	507 95
Bellah, Quigley & Co	510 20
J. W. Gaskill & Sons	513 29
C. S. Wertsner	541 80
Francis Gudgin	569 90
S. C. Carll	768 00
H. Lissberger	955 54

Class No. 63. Sperm and lard oil:

H. Lissberger	*420 00
David Babcock & Co	446 00
C. S. Wertsner	450 00
U. S. White Lead Co	$456 00
J. H. Walker	460 00
S. C. Carll	510 00
Francis Gudgin	530 00

Class No. 64. Tallow, soap: †

C. S. Wertsner	*3 60
H. Lissberger	3 60
J. H. Walker	4 50
Francis Gudgin	7 50
S. C. Carll	9 00

Class No. 68. Glass:

E. F. Holbrook & Bros	*335 27
H. Lissberger	345 25
U. S. White Lead Co	372 38
J. H. Walker	377 30
Francis Gudgin	390 25
Bellah, Quigley & Co	431 25
J. W. Gaskill & Sons	542 95
George P. Goff	577 00
S. C. Carll	639 60

Class No. 65. Brushes:

H. Lissberger	*212 50
J. H. Walker	279 27
C. S. Wertsner	314 75
Bellah, Quigley & Co	358 00
George P. Goff	365 40
U. S. White Lead Co	378 35
Francis Gudgin	419 00
S. C. Carll	566 00

Class No. 70. Dry goods:

J. H. Walker	*120 75
H. Lissberger	126 10
Noblit, Brown, Noblit & Co	174 10
George P. Goff	196 00
S. C. Carll	218 75

Class No. 71. Stationery:

Solomons & Chapman	*133 20
William H. Dempsey	428 88

Class No. 72. Crucibles:

J. H. Walker	*80 40
Joseph J. Walton	90 00
Dell Noblit, jr	97 50
H. Lissberger	97 50
J. W. Gaskill & Sons	105 00
David Babcock & Co	127 50

Class No. 73. Ship-chandlery:

H. Lissberger	*188 90
J. H. Walker	210 60
S. C. Carll	277 50

Class No. 74. Acids:

H. Lissberger	*6 75
U. S. White-Lead Co	10 50
J. H. Walker	45 00
S. C. Carll	75 00

* Accepted. † Decided by lot.

Class No. 75. Rosin, pitch, &c.:

H. Lissberger	*$57 50
J. H. Walker	60 50
U. S. White-Lead Co	64 50
S. C. Carll	80 00

Class No. 77. Belting, packing

J. H. Walker	*419 15
H. Lissberger	451 25
William A. Torrey & Co.	468 20
Stephen Ballard & Co	476 75
George P. Goff	584 50
S. C. Carll	697 05

Class No. 78. Leather:

Stephen Ballard & Co	*28 80
H. Lissberger	31 20
J. H. Walker	33 12
S. C. Carll	43 20

Class No. 87. Bituminous coal:

Johnson Brothers	*$4,485 00
L. William Guinaud	4,500 00
Riley & Sons	4,605 00
Samuel G. French	5,550 00

Class No. 88. Charcoal, coke:

Johnson Brothers	*55 00
William T. Clark	62 50
J. H. Walker	122 50

Class No. 89. Wood:

L. William Guinaud	*85 20
Johnson Brothers	102 90
Riley & Sons	162 90

Opened in presence of—
J. W. EASBY, *Chief of Bureau.*
H. A. GOLDSBOROUGH, *Chief Clerk.*
THOMAS J. LASIER, *Clerk.*

NAVY DEPARTMENT,
BUREAU OF CONSTRUCTION AND REPAIR, *September* 25, 1877.

Offer to furnish material for the Navy under the advertisement of the Bureau of Construction and Repair of August 21, 1877, *at the navy-yard, Norfolk.*

Class No. 9. Yellow-pine mast timber:

William White	*$1,992 08
S. C. Carll	2,692 00
James & Abbott	3,338 08
A. A. McCullough	3,365 00
George T. Wallace	4,011 08

Class No. 13. White-pine plank, boards:

A. A. McCullough	*4,315 00
S. C. Carll	4,465 00
J. W. Gaskill & Sons	4,563 00
Robert J. Neely	4,660 00
James & Abbott	4,882 50
George C. Ludlam	4,982 00
Watson & Pittinger	5,020 00
John F. Quigley	5,194 00
Thomas W. Smith	5,379 00

Class No. 15. White ash, elm, beech:

A. A. McCullough	*507 50
Robert J. Neely	607 50
George C. Ludlam	642 50
J. W. Gaskill & Sons	654 50
S. C. Carll	675 00
Watson & Pittinger	722 50
James Fentress	810 00

Class No. 16. White ash oars:

George P. Goff	*$585 37
De Grauw, Aymar & Co.	613 25
J. H. Walker	641 12
Frederick A. Southmayd.	710 79
David Babcock & Co	787 00
E. V. White & Co	874 25
S. C. Carll	937 50
James Fentress	1,141 00
Robert J. Neely	1,338 00

Class No. 18. Black walnut, &c.:

A. A. McCullough	*992 50
Robert J. Neely	1,062 50
S. C. Carll	1,080 00
J. W. Gaskill & Sons	1,125 50
Watson & Pittinger	1,187 50
James & Abbott	1,198 50
James Fentress	1,500 00
George C. Ludlam	1,690 00

Class No. 22. Cypress, cedar:†

George T. Wallace	*135 00
A. A. McCullough	135 00
Watson & Pittinger	142 50
Robert J. Neely	147 00
S. C. Carll	210 00

* Accepted. † Decided by lot.

Class No. 25. Lignum-vitæ:

J. H. Walker	*$250 00
H. Lissberger	260 00
David Babcock & Co	278 00
S. C. Carll	280 00

Class No. 32. Wrought iron, round and square:

H. Lissberger	*1,153 20
George P. Goff	1,189 10
J. W. Gaskill & Sons	1,193 96
E. V. White & Co	1,217 75
Bellah, Quigley & Co	1,269 40
Taylor, Elliot & Waters	1,295 25
J. H. Walker	1,298 00
S. C. Carll	1,669 00

Class No. 33. Wrought iron, flat:

George P. Goff	*459 02
J. W. Gaskill & Sons	459 79
H. Lissberger	503 47
Bellah, Quigley & Co	519 80
Taylor, Elliot & Waters	527 27
J. H. Walker	558 41
S. C. Carll	829 70

Class No. 34. Iron, plate:

H. Lissberger	*241 00
J. W. Gaskill & Sons	269 60
Bellah, Quigley & Co	273 50
J. H. Walker	317 75

Class No. 35. Steel:

David Babcock & Co	*840 25
Bellah, Quigley & Co	846 00
J. H. Walker	901 38
George P. Goff	916 50
James D. Rowland	916 50
H. Lissberger	938 87
Midvale Steel Works	969 37
J. W. Gaskill & Sons	1,047 65
E. V. White & Co	1,082 25
S. C. Carll	1,265 00

Class No. 37. Iron spikes:

Dell Noblit, jr	*402 30
J. W. Gaskill & Sons	430 61
H. Lissberger	447 00
Bellah, Quigley & Co	453 20
J. H. Walker	525 50
George P. Goff	587 06
Taylor, Elliot & Waters	588 50
S. C. Carll	593 00
David Babcock & Co	612 50
E. V. White & Co	968 50

Class No. 39. Iron cut nails:

George P. Goff	*167 50
H. Lissberger	171 00
J. H. Walker	176 25
Taylor, Elliot & Waters	184 50
Bellah, Quigley & Co	194 50
J. W. Gaskill & Sons	204 15
Noblit, Brown, Noblit & Co	211 25
S. C. Carll	229 50
E. V. White & Co	239 25

Class No. 44. Tin:

George P. Goff	*$95 52
H. Lissberger	97 50
S. C. Carll	105 00
Robert Leitch & Sons	105 75
J. W. Gaskill & Sons	106 71
J. H. Walker	112 50
Bellah, Quigley & Co	114 00
David Babcock & Co	117 00

Class No. 48. Locks, hinges, &c.:

H. Lissberger	*442 50
J. H. Walker	560 50
George P. Goff	575 00
Dell Noblit, jr	631 18
J. W. Gaskill & Sons	665 06
S. C. Carll	871 45

Class No. 49. Screws:

Dell Noblit, jr	*477 10
S. C. Carll	493 48
J. H. Walker	499 42
J. W. Gaskill & Sons	507 74
Bellah, Quigley & Co	* 516 44
H. Lissberger	529 82
Taylor, Elliot & Waters	544 73
E. V. White & Co	559 60

Class No. 50. Files:

J. H. Walker	*379 98
George P. Goff	426 27
Joseph J. Walton	434 65
C. H. Wight	456 34
H. Lissberger	473 26
Bellah, Quigley & Co	526 23
Dell Noblit, jr	527 90
J. W. Gaskill & Sons	561 83
S. C. Carll	579 71

Class No. 52. Tools for ships' stores:

H. Lissberger	*1,013 45
J. H. Walker	1,539 13
J. W. Gaskill & Sons	2,043 01
S. C. Carll	2,263 20

Class No. 53. Tools for yard use:

H. Lissberger	*1,032 15
S. C. Carll	2,325 55
J. W. Gaskill & Sons	2,722 30
J. H. Walker	2,818 70

Class No. 54. Hardware:

J. H. Walker	*1,275 64
H. Lissberger	1,400 13
J. W. Gaskill & Sons	1,713 28
S. C. Carll	2,379 60

Class No. 56. White lead:

H. Lissberger	*1,148 00
George H. Burnett	1,205 00
Bellah, Quigley & Co	1,225 00

* Accepted.

Thomas S. Harrison	$1,228 40
John Curtlett	1,237 50
C. T. Raynolds & Co	1,285 00
U. S. White Lead Co	1,300 00
J. H. Walker	1,340 00
Joseph J. Walton	1,340 00
Robert Leitch & Sons	1,350 00
George P. Goff	1,352 50
J. W. Gaskill & Sons	1,380 00
E. V. White & Co	1,380 00
David Babcock & Co	1,485 00
S. C. Carll	1,500 00

Class No. 57. Zinc paints:

H. Lissberger	*505 00
C. T. Raynolds & Co	515 00
Thomas S. Harrison	528 40
Robert Leitch & Sons	570 00
Joseph J. Walton	595 00
J. H. Walker	600 00
U. S. White Lead Co	620 00
Bellah, Quigley & Co	642 50
George P. Goff	650 00
J. W. Gaskill & Sons	660 00
David Babcock & Co	682 50
S. C. Carll	690 00
E. V. White & Co	705 00
C. A. Burgess	730 00

Class No. 58. Colored paints:

C. T. Raynolds & Co	*890 47
Joseph J. Walton	908 00
J. H. Walker	936 00
David Babcock & Co	947 75
C. S. Wertsner	991 05
Bellah, Quigley & Co	998 00
Thomas S. Harrison	1,050 50
J. W. Gaskill & Sons	1,076 66
H. Lissberger	1,123 10
U. S. White Lead Co	1,221 17
E. V. White & Co	1,451 47
C. A. Burgess & Co	1,629 85
S. C. Carll	1,876 25

Class No. 59. Linseed-oil:

H. Lissberger	*1,488 00
C. T. Raynolds & Co	1,500 00
U. S. White Lead Co	1,536 00
J. H. Walker	1,548 00
C. S. Wertsner	1,560 00
David Babcock & Co	1,572 00
J. W. Gaskill & Sons	1,584 00
S. C. Carll	1,596 00
Bellah, Quigley & Co	1,620 00

Class No. 60. Varnish, &c.:†

Class No. 63. Sperm and lard oil:

David Babcock & Co	*682 00
J. H. Walker	692 00
H. Lissberger	$693 00
U. S. White Lead Co	713, 00
S. C. Carll	746 00
C. A. Burgess	850 00

Class No. 64. Tallow, soap.

H. Lissberger	*85 00
J. H. Walker	92 50
S. C. Carll	95 00
E. V. White & Co	100 00
David Babcock & Co	105 00

Class No. 68. Glass:

J. H. Walker	*321 62
Arthur & Bonnell	333 75
Bellah, Quigley & Co	338 25
J. W. Gaskill & Sons	341 25
U. S. White Lead Co	349 25
E. V. White & Co	450 75
George P. Goff	577 50
S. C. Carll	590 50

Class No. 69. Brushes:

J. H. Walker	*239 75
H. Lissberger	299 75
U. S. White Lead Co	405 85
S. C. Carll	458 15
C. A. Burgess & Co	547 00

Class No. 70. Dry goods:

H. Lissberger	*234 04
J. H. Walker	250 65
Noblit, Brown, Noblit & Co	380 62
S. C. Carll	415 90

Class No. 71. Stationery:

Solomons & Chapman	*283 19
William H. Dempsey	301 51
Arthur & Bonnell	369 94

Class No. 73. Ship-chandlery:

H. Lissberger	*505 10
J. H. Walker	658 70

Class No. 77. Belting, packing:

H. Lissberger	*95 75
Stephen Ballard & Co	148 75
J. H. Walker	161 50
William A. Torrey & Co.	238 00
E. V. White & Co	276 25
S. C. Carll	400 00

Class No. 78. Leather:

Stephen Ballard & Co	*36 00
H. Lissberger & Co	40 80
J. H. Walker	41 40
E. V. White & Co	48 00
S. C. Carll	54 00

Opened in presence of—
J. W. EASBY, *Chief of Bureau.*
H. A. GOLDSBOROUGH, *Chief Clerk.*
THOMAS J. LASIER, *Clerk.*

NAVY DEPARTMENT,
BUREAU OF CONSTRUCTION AND REPAIR,
September 25, 1877.

*Accepted. †Class not awarded.

Offer to furnish material for the Navy under the advertisement of the Bureau of Construction and Repair of August 21, 1877, at the navy-yard, Mare Island.

Class No. 7. Oregon pine logs:

A. Powell	*$3,127 53
James & Abbott	5,782 98

Class No. 8. Oregon pine beams:

A. Powell	*1,314 69
James & Abbott	2,494 54

Class No. 9. Yellow-pine mast-timber:

A. Powell	*7,900 50
James & Abbott	8,014 00

Class No. 13. Sugar-pine plank and boards:

A. Powell	*4,320 00
James & Abbott	6,304 00

Class No. 16. White-ash oars:

De Grauw, Aymar & Co.	*182 52
J. H. Walker	212 94
David Babcock & Co	324 48
A. Powell	344 76

Class No. 24. White-oak staves and heading: †

Class No. 32. Wrought iron, round and square:

J. S. Van Winkle	(‡)
James E. Gordon	*510 00
Baker & Hamilton	551 00
H. Lissberger	560 00
J. H. Walker	1,040 00

Class No. 35. Steel:

H. Lissberger	*380 25
Midvale Steel Works	418 50
J. H. Walker	469 50
J. S. Van Winkle	502 50
David Babcock & Co.	528 00

Class No. 42. Lead, pipe, sheet:

H. Lissberger	*1,656 25
J. H. Walker	2,101 25
Baker & Hamilton	2,240 00
David Babcock & Co.	2,276 25

Class No. 43. Zinc:

H. Lissberger	*560 00
J. H. Walker	730 00
David Babcock & Co	740 00

Class No. 44. Tin:

H. Lissberger	*$470 00
J. H. Walker	607 50
David Babcock & Co	610 00

Class No. 48. Locks, hinges, &c.:

H. Lissberger	*293 90
James E. Gordon	377 00
J. H. Walker	473 16

Class No. 49. Screws:

H. Lissberger	*163 65
James E. Gordon	192 25
J. H. Walker	199 45
Baker & Hamilton	210 30

Class No. 50. Files:

J. H. Walker	*223 83
H. Lissberger	245 68
James E. Gordon	267 05
C. H. Wight	283 80
Baker & Hamilton	307 99

Class No. 51. Augers:

H. Lissberger	*221 60
James E. Gordon	338 40
J. H. Walker	364 70

Class No. 52. Tools for ships' stores:

James E. Gordon	*194 50
H. Lissberger	276 00
Baker & Hamilton	302 84
J. H. Walker	551 35

Class No. 53. Tools for yard use:

H. Lissberger	*397 50
Baker & Hamilton	483 55
J. H. Walker	627 25

Class No. 54. Hardware:

J. H. Walker	*1,434 05
H. Lissberger	1,467 95
David Babcock & Co	1,497 41

Class No. 56. White lead:

H. Lissberger	*1,460 00
Whittier, Fuller & Co	1,900 00
J. H. Walker	2,150 00
David Babcock & Co	2,750 00

Class No. 57. Zinc paint:

H. Lissberger	*280 00
J. H. Walker	520 00
Whittier, Fuller & Co	520 00

*Accepted. †Class not awarded. ‡Informal.

Class No. 58. Colored paints:

Whittier, Fuller & Co...	*$463 10
H. Lissberger.....	640 22
J. H. Walker	666 80

Class No. 59. Linseed-oil:

H. Lissberger.....	*1,270 00
J. H. Walker	1,390 00
Whittier, Fuller & Co...	1,530 00
F. B. Taylor.....	1,550 00

Class No. 60. Varnish, &c.:

Whittier, Fuller & Co...	*1,194 00
J. H. Walker	1,287 00
F. B. Taylor	1,325 00
H. Lissberger.....	1,907 50

Class No. 63. Sperm and lard oil:

H. Lissberger.....	*370 00
Whittier, Fuller & Co...	400 00
F. B. Taylor	437 50
J. H. Walker	500 00

Class No. 64. Tallow, soap:

H. Lissberger.....	*21 50
J. H. Walker	42 50
A. Powell.....	51 00

Class No. 65. Fish-oil:

Whittier, Fuller & Co...	*22 50
F. B. Taylor.....	27 50
H. Lissberger.....	29 00
J. H. Walker	33 00

Class No. 68. Glass:

Whittier, Fuller & Co...	*$129 00
J. H. Walker	210 00

Class No. 69. Brushes:

H. Lissberger.....	*120 75
Whittier, Fuller & Co...	198 25
J. H. Walker	239 50

Class No. 70. Dry-goods:

H. Lissberger.....	*138 00
J. H. Walker	400 00
A. Powell	457 50

Class No. 71. Stationery:

L. H. Bonestell.....	*258 58
Wm. H. Dempsey.....	743 00

Class No. 73. Ship-chandlery:

H. Lissberger.....	*357 75
J. H. Walker	569 80

Class No. 78. Leather

H. Lissberger.....	*157 00
J. H. Walker	229 00
Horatio N. Cook	246 00
A. Powell.....	350 00

Class No. 85. Anthracite coal:

William Walker	*3,750 00
A. Powell	4,250 00
James McCudden	4,487 50

Opened in presence of—
J. W. EASBY, *Chief of Bureau.*
H. A. GOLDSBOROUGH, *Chief Clerk.*
THOMAS J. LASIER, *Clerk.*

NAVY DEPARTMENT,
BUREAU OF CONSTRUCTION AND REPAIR, *September* 25, 1877.

No. 11.—MARINE CORPS.

HEADQUARTERS MARINE CORPS,
Washington, D. C., November 16, 1877.

SIR: I have the honor to state that at the present time there are 1,971 enlisted men in the Marine Corps, of which number 1,034 are on board vessels in commission, and 937 at the several shore-stations.

REDUCTION OF OFFICERS.

In compliance with the naval appropriation bill of 1876–'77, which provides "that no appointments shall be made until the number of officers is reduced to 75," the present list has been reduced by five officers, with two more to follow soon.

*Accepted.

REDUCTION OF ENLISTED MEN.

The naval appropriation bill of 1875–'76 provided that the appropriation "should be for 1,500 privates, and no more." This number has proved totally inadequate to the wants of the Navy, and I urgently recommend that Congress allow the estimates for 1,800 privates to pass. As this requires no other action, I trust it may be favorably considered by the department, and inclose additional estimates for 300 privates.

REFORMS.

Many needed reforms have been introduced, particularly in the more systematic instruction of officers and non-commissioned officers in tactics and other duties, in the examination of non-commissioned officers before promotion (which should also be required of the officers), and the giving of warrants to the same by the commandant.

The reduction of non-commissioned officers in the United States, by the Colonel Commandant only, is also a much valued reform, as is the present system of discharges.

CLOTHING FOR ENLISTED MEN.

The standard of materials for clothing is now in many cases that used in the Army, but what is still needed is to manufacture the clothing for enlisted men at the quartermaster's depot of the corps in Philadelphia, instead of having it made by contract. This would give us as good clothing as that of the Army.

BARRACKS.

The appropriation for repair of barracks has been so small for several years past, viz, $5,000 per annum, that but little has been done, and a larger appropriation for this year is urgently needed. Estimates are submitted. I inclose, also, estimates for building barracks and quarters at League Island, Annapolis, and Norfolk, and trust that the old hulks and sheds in which the men are quartered may give place to proper barracks.

The money annually appropriated for "hire of quarters" for officers at Norfolk, Annapolis, League Island, and Washington, D. C., would in a few years build good quarters at all these stations, so that they could live near the men, which is greatly needed.

SUTLERS.

The system of sutlers in the Marine Corps needs change, being a relic of the past, and having been abolished as such in the Army. There are no regulations to govern this matter other than the obsolete Army ones. Under no circumstances should enlisted men be sutlers, or agents for the same. It is subversive of discipline and good order, and reduces the first sergeants, who have been allowed by long custom to act in that capacity, to mere traders, selling to the men, not to speak of other abuses flowing from it.

DISCIPLINE.

The discipline and efficiency of the Corps is excellent, but both on shore and on board ship a code of regulations is much needed to define

its duties. A board, composed of officers of the Navy and Marine Corps, should be ordered to prepare one. No officer of the Marine Corps was on the board which drew up the present Navy Regulations, although the Corps constituted, at that time, one-fifth of the whole Navy.

BAND.

An increase of the band of the Marine Corps is urgently recommended, as well as placing it upon a proper footing as regards classes and pay. This band is properly a national band, being used for all official purposes in Washington.

RECENT SERVICES OF THE CORPS.

During the past summer, upon the requisitions of the governors of various States, several detachments of the Marine Corps were actively engaged in guarding public and private property from mob violence, and in every case the officers and men received the highest praise from Generals Hancock and Barry, under whom they served, as well as the merited commendation of the department.

Very respectfully, your obedient servant,

C. G. McCAWLEY,
Colonel, Commandant.

Hon. RICHARD W. THOMPSON,
Secretary of the Navy, Washington, D. C.

HEADQUARTERS MARINE CORPS,
QUARTERMASTER'S OFFICE,
Washington, D. C., August 3, 1877.

SIR: During my recent visit under orders to Portsmouth, N. H., Boston, Mass., Brooklyn, N. Y., and League Island, I inspected with the commanding officer at each post the condition of the buildings and grounds, with a view to such repairs as may be necessary for the present year, and beg leave to report as follows:

At Portsmouth, the buildings and grounds are in fair condition, and the estimated cost of keeping them so during present fiscal year is $613. That which most needs attention now is the water-closets to officers quarters, and the entire drainage to barracks.

At Boston, the barracks and quarters are in reasonably good order, but certain repairs and improvements are recommended, the estimated cost of which, as presented by a board of survey, is $2,666. Of the work thus recommended I would specially notice, as of most importance, the replacing the steps leading from the navy-yard to the front of commanding officer's quarters on Chelsea street, and the remodeling and enlarging the cells above the guard-room by removing cells Nos. 6 and 7 in front of the windows facing the parade-ground, and altering cells Nos. 2, 3, 4, and 5 into two cells, thereby improving their size and ventilation, and making them proper cells for long confinement of prisoners, which at present they are not. Also the erection of a small addition to the left-wing quarters sufficient to contain two separate bath-rooms and water-closets. In view of the fact that officers with and without families occupy the same building, these conveniences should be regarded as a necessity.

The Brooklyn barracks, though presenting quite a creditable appear-

ance viewed from the outside, were, upon a close inspection, found to need considerable repairs of a minor character, and to require painting inside and out, the estimated cost of which, by Mr. John K. Bullman, general superintendent of the department of yards and docks at the Brooklyn navy-yard, who was associated with the board of survey, is $8,147.85. This is a large sum to expend upon barracks, simply as repairs, but from some cause these barracks have fallen into a much worse condition than either the Portsmouth or Boston barracks, and, though the whole amount named may not be required to put them in the condition they should be, several thousand dollars in addition to the usual yearly apportionment will be necessary.

At League Island the officers and men are quartered aboard the United States ship St. Louis. In contemplation of the erection of barracks on the island for the more comfortable quartering of the command, the civil engineer at League Island has presented a plan, and estimates the cost of building at $7,500.

RECAPITULATION.

For repairs at Portsmouth, N. H	$613 00
For repairs at Boston, Mass	2,666 00
For repairs at Brooklyn, N. Y	8,147 85
Total for repairs	11,426 85

Estimates for the following work have been received, and are also submitted:

For construction of barracks, League Island	$7,500 00	
For construction of commanding officer's quarters, Norfolk	4,500 00	
For construction of subalterns' quarters, Norfolk	8,425 25	
For construction of commanding officer's quarters, Annapolis	6,289 00	
For construction of subalterns' quarters, Annapolis	13,988 00	
For construction of barracks, Annapolis	21,408 00	
		62,110 25
Aggregate amount		73,537 10

I am, very respectfully, your obedient servant,

W. B. SLACK,
Quartermaster Marine Corps.

Col. CHAS. G. McCAWLEY,
Commandant United States Marine Corps, Washington, D. C.

HEADQUARTERS MARINE CORPS,
Washington, D. C., September 6, 1877.

SIR: I respectfully forward to the department, in duplicate, "estimates of appropriations for the paymaster's and quartermaster's departments, United States Marine Corps," for the fiscal year ending June 30, 1879.

I also inclose letters from the paymaster and quartermaster in relation to the estimates.

I have the honor to be, your obedient servant,

C. G. McCAWLEY,
Colonel, Commandant.

Hon. R. W. THOMPSON,
Secretary of the Navy, Washington, D. C.

HEADQUARTERS MARINE CORPS,
QUARTERMASTER'S OFFICE,
Washington, D. C., September 5, 1877.

SIR: I respectfully submit herewith estimates of appropriations required for the service of the fiscal year ending June 30, 1879, by the quartermaster's department of the Marine Corps.

These estimates vary from those submitted for fiscal year ending June 30, 1878, as follows:

Provisions, decreased	$14,126 50
Clothing, decreased	10,268 00
Fuel, decreased	1,950 00
Military stores, increased	1,000 00
Repair of barracks, decreased	4,000 00

The aggregate amount of these estimates is $29,026.50 less than that asked in estimates of last year.

As directed by you, I submit estimates of appropriations required by the quartermaster's department for the support of an increase of three hundred privates, amounting to $40,093. I also inclose schedule, in duplicate, of proposals received by the quartermaster's department for the supply of rations and fuel to the Marine Corps during fiscal year ending June 30, 1878.

I am, very respectfully, your obedient servant,

W. B. SLACK,
Quartermaster Marine Corps.

Col. CHAS. G. MCCAWLEY,
Commandant United States Marine Corps, Headquarters.

Estimates of appropriations required for the service of the fiscal year ending June 30, 1879, by the Quartermaster's Department, United States Marine Corps.

Detailed objects of expenditure, and explanations.	Estimated amount which will be required for each detailed object of expenditure.	Total amount to be appropriated under each head of appropriation.	Amount appropriated for the current fiscal year ending June 30, 1878.
PROVISIONS.			
1,000 non-commissioned officers, musicians, privates, and washerwomen, 365 days, at one ration per day, is 365,000 rations, at 22 cents	$80,300 00		
Difference between the cost of rations at 22 cents and commutation at 75 cents, for ten enlisted men, employed as clerks, messengers, laborers, &c., in commandant's, adjutant's and inspector's, quartermaster's and assistant quartermaster's offices for 365 days, being 3,650 rations, at 53 cents	1,934 50	$82,234 50	$88,300 00
CLOTHING.			
2,000 non-commissioned officers, musicians, and privates, at $33.26 per annum, actual cost per contract 1876-'77	66,250 00		
400 overcoats, at $8.40 each	3,360 00	69,610 00	40,000 00
FUEL.			
3,894 cords of wood, as follows: one colonel commandant, one colonel, two lieutenant-colonels, four majors, three staff-majors, two staff-captains, twelve captains, fifteen first lieutenants, fifteen second lieutenants, one thousand non-commissioned officers, musicians, privates, and washerwomen; six hospitals, one armory, five mess-rooms for officers, sixteen offices for commandant and staff and commanding officers of ports, nine rooms for officers of the day, nine guard-rooms at barracks and navy-yards, three stores for clothing and other supplies; one-fourth additional on 2,400 cords, quantity supposed to required in latitude north 36 degrees from September 1 to April 30, 600 cords, amounting in all to 3,892 cords, which, at $6.50 per cord, is	.....	25,311 00	25,000 00

Estimates of appropriations required for the fiscal year, &c.—Continued.

Detailed objects of expenditure, and explanations.	Estimated amount which will be required for each detailed object of expenditure.	Total amount to be appropriated under each head of appropriation.	Amount appropriated for the current fiscal year ending June 30, 1878.
MILITARY STORES.			
Pay of mechanics employed in armorer's shop, Washington, repair of arms, purchase of military equipments, ordnance stores, flags, drums, fifes, and other instruments for the band	.....	$10,000 00	$5,000 00
TRANSPORTATION AND RECRUITING.			
Transportation of troops and expenses of recruiting	.....	8,000 00	5,000 00
REPAIR OF BARRACKS.			
Portsmouth, N. H., Boston, Mass., Brooklyn, N. Y., Annapolis, Md., Headquarters, Washington, D. C., Navy-yard, Washington, D. C., Gosport, Va., Mare Island, Cal., and for rent of offices where there are no public buildings	.....	11,000 00	5,000 00
HIRE OF QUARTERS.			
Hire of quarters for officers where there are no public buildings	.....	16,000 00	16,000 00
FORAGE.			
Forage for public horses and the authorized number of officers' horses	.....	5,000 00	5,000 00
CONTINGENCIES.			
For freight, ferriage, toll, cartage, per diem for constant labor, funeral expenses of marines, stationery, telegraphing, apprehension of deserters, oil, gas, candles, repair of gas and water-fixtures, water-rent, barrack furniture, furniture for government houses and offices, packing-boxes, bed-sacks, wrapping-paper, oil-cloth, crash, rope, twine, carpenters' tools, tools for police purposes, purchase of fire-extinguishers, purchase and repair of hose, repairs to public carryall, purchase and repair of harness, purchase and repair of hand-carts and wheelbarrows, purchase and repair of cooking-stoves, ranges, &c., stoves where there are no grates, gravel, &c., for parade-ground, repair of pumps, and for other purposes	.....	25,000 00	20,000 00
PRINTING.			
For printing and binding, to be executed under the direction of the Government Printer	.....	5,000 00	.....
Total	.....	257,155 50	209,300 00

Submitted September 5, 1877.

HEADQUARTERS MARINE CORPS, QUARTERMASTER'S OFFICE.

W. B. SLACK,
Quartermaster, Marine Corps.

Forwarded:
C. G. McCAWLEY,
Colonel, Commandant.

Estimates of appropriations required for the service of the fiscal year ending June 30, 1879, by the quartermaster's department, Marine Corps.

Detailed objects of expenditure, and explanations.	Total amount to be appropriated under each head of appropriation.
PROVISIONS.	
300 privates, 365 days, at one ration per day each, is 109,500 rations, at 22 cents per ration (submitted)	$24,090 00
CLOTHING.	
300 privates, at $33.26 each per annum, actual cost per contracts 1876–'77 (submitted)	9,978 00
FUEL.	
300 privates, at one and a half cords each, 450 cords, at $6.50 per cord (submitted)	2,925 00
MILITARY STORES.	
Military equipments for 300 privates (submitted)	1,600 00
TRANSPORTATION AND RECRUITING.	
Transportation and expenses of recruiting 300 privates (submitted)	1,500 00
Total	40,093 00

Respectfully submitted.

W. B. SLACK,
Quartermaster Marine Corps.

QUARTERMASTER'S OFFICE.
UNITED STATES MARINE CORPS,
Washington, D.C., September 5, 1877.

Forwarded:
C. G. MCCAWLEY, *Colonel, Commandant.*

ABSTRACT OF PROPOSALS RECEIVED FOR FURNISHING FUEL AND RATIONS TO THE UNITED STATES MARINE CORPS, UNDER THE COGNIZANCE OF THE QUARTERMASTER'S DEPARTMENT.

Proposals for rations under advertisement May 1 *and July* 18, 1877.

Stations.	Bidders.	Rations, per hundred.
Portsmouth, N. H.	Peters Bros	$23 00
	James E. Chase	24 45
	N. F. Mathes	*18 49
	Harry W. Hall	18 90
	Peter Higgins	19 69½
	Kimberly Bros	23 40
Charlestown, Mass.	Peters Bros	23 00
	N. F. Mathes	25 00
	Harry W. Hall	*19 45
	John C. Gilbert	24 00
	Kimberly Bros	21 00
Brooklyn, N. Y.	Peters Bros	21 60
	N. F. Mathes	24 00
	Harry W. Hall	*18 20
	John C. Gilbert	18 22
	Kimberly Bros	18 25
Philadelphia, Pa.	Peters Bros	23 00
	N. F. Mathes	28 50
	John C. Gilbert	29 00
	Kimberly Bros	23 49
Washington, D. C.	Peters Bros	21 60
	N. F. Mathes	23 50
	Harry W. Hall	*16 90
	John C. Gilbert	18 00
	Kimberly Bros	18 15
Gosport, Va.	Peters Bros	20 90
	N. F. Mathes	25 00

* Accepted.

Proposals for rations under advertisement May 1 and July 18, 1877.

Stations.	Bidders.	Rations, per hundred.
Gosport, Va	Harry W. Hall	$18 20
	John C. Gilbert	29 00
	Kimberly Bros	*18 05
Annapolis, Md	John Kealy	19 00
	N. F. Mathes	25 00
	Harry W. Hall	19 00
	John C. Gilbert	29 00
	Kimberly Bros	*18 24
Mare Island, Cal	J. A. McInnis	25 99
	Hanley & Snow	27 00
	N. F. Mathes	22 99
	Harry W. Hall	*22 90
	John C. Gilbert	30 00
	Kimberly Bros	29 00
League Island, Pa	N. F. Mathes	23 00
	H. W. Hall	*18 90
	Samuel T. Reckless	24 00

*Accepted.

Proposals for fuel under advertisement May 3, 1877.

Stations.	Bidders.	Wood, per cord.	Coal, per ton.
Portsmouth, N. H	William H. Sise	.....	$5 15
	Peters Bros	$13 50	7 90
	Hamilton A. Mathers	*6 12	.....
	C. E. Walker & Co	.....	*5 00
	G. A. Hammond	7 75	.....
	N. F. Mathes	6 50	.....
Charlestown, Mass	Samuel Knight	8 00	5 00
	Peters Bros	12 30	7 40
	C. A. Campbell	*7 00	*4 70
Brooklyn, N. Y	Peters Bros	11 50	5 87
	A. F. Nathan	.....	5 00
	Samuel G. French	*9 35	*3 94
Philadelphia, Pa	James J. Convery	*7 45	.....
Washington, D. C	Peters Bros	8 30	5 87
	Johnson Bros	4 40	4 05
	John McElroy	5 43	4 42
	L. W. Guinand	.....	*3 79
	Norman L. Fowler	4 47	4 39
	G. Y. At Lee	*4 25	4 15
	A. A. McCullough	6 80	4 40
Gosport, Va	Peters Bros	*4 27	*4 37
	John W. Oast	4 75	.....
	Norman L. Fowler	6 50	.....
	A. A. McCullough	4 80	4 40
	John Kealy	.....	7 00
Annapolis, Md	George C. Cross	5 94	.....
	Johnson Bros	*5 85	.....
Mare Island, Cal	Arthur M. Ebbetts	.....	19 90
	J. A. McInnis	*10 75	*19 75
	James McCudden	11 10	21 00
	N. F. Mathes	11 47½	.....

*Accepted.

HEADQUARTERS MARINE CORPS,
Quartermaster's Office, Washington, September 5, 1877.

W. B. SLACK, *Quartermaster Marine Corps.*

Forwarded:
C. G. MCCAWLEY, *Colonel Commandant.*

HEADQUARTERS MARINE CORPS,
Paymaster's Office, August 9, 1877.

SIR: I respectfully submit herewith estimates in detail for the pay of officers, non-commissioned officers, musicians, privates, and others of the United States Marine Corps, for the fiscal year ending June 30, 1879.

I am, very respectfully, yours, &c.,

GREEN CLAY GOODLOE,
Major and Paymaster Marine Corps.

Col. CHAS. G. MCCAWLEY,
Commandant United States Marine Corps, Headquarters.

Estimates of appropriations required for the service of the fiscal year ending June 30, 1879, *by the paymaster of the United States Marine Corps.*

Detailed objects of expenditure, and explantions.		Estimated amount which will be required for each detailed object of expenditure.	Amount appropriated for the current fiscal year ending June 30, 1878.
PAY OF OFFICERS, NON-COMMISSIONED OFFICERS, MUSICIANS, PRIVATES, AND OTHERS OF THE UNITED STATES MARINE CORPS; FOR TRANSPORTATION OF OFFICERS TRAVELING WITHOUT TROOPS, AND FOR PAYMENTS TO DISCHARGED SOLDIERS FOR CLOTHING UNDRAWN.			
1 colonel commandant	Rev. Stat. p. 271, sec. 1596; sec. 1623; acts of June 30, 1834 (4 Stat. at L., p. 713, secs. 4, 5), March 2, 1847 (9 Stat. at L., p. 155, sec. 3), August 5, 1854 (10 Stat. at L., p. 506, sec. 1), February 21, 1857 (11 Stat. at L., p. 163, sec. 1), July 17, 1862 (12 Stat. at L., p. 594, sec. 21), June 30, 1864 (13 Stat. at L., p. 144, sec. 1), March 3, 1865 (13 Stat. at L., p. 487, sec. 1), July 28, 1866 (14 Stat. at L., p. 324, sec. 13), July 28, 1866 (14 Stat. at L., p. 337, sec. 37), March 2, 1867 (14 Stat. at L., p. 432, sec. 1), July 15, 1870 (14 Stat. at L., p. 517, sec. 7), January 16, 1875 (18 Stat. at L., p. 301, sec. 1); Navy Regulations; and act of July 18, 1876.	$4,500	
1 colonel		4,500	
2 lieutenant-colonels		8,000	
1 adjutant and inspector, 1 quartermaster, and 1 paymaster		10,000	
4 majors		14,000	
2 assistant quartermasters		5,400	
20 captains		46,800	
30 first lieutenants		54,750	
21 second lieutenants		29,540	
1 brigadier-general, retired-list		4,125	
1 lieutenant-colonel, retired-list		3,000	
3 majors, retired-list		7,500	
1 assistant quartermaster, retired-list		2,100	
3 captains, retired-list		4,455	
1 first lieutenant, retired-list		1,125	
2 second lieutenants, retired-list		2,100	
1 leader of the band		948	
1 sergeant-major, 1 quartermaster-sergeant, and 1 drum-major		1,080	
50 first sergeants		16,200	
140 sergeants		31,560	
180 corporals		35,400	
30 musicians		9,996	
96 drummers and fifers		17,736	
1,500 privates		270,000	
10 clerks and 2 messengers		10,000	
Payments to discharged soldiers for clothing undrawn		20,000	
Transportation of officers traveling without troops		5,000	
		619,815	$619,825

GREEN CLAY GOODLOE,
Major and Paymaster Marine Corps.

HEADQUARTERS MARINE CORPS,
Paymaster's Office, August 9, 1877.

Forwarded:
C. G. MCCAWLEY,
Colonel Commandant.

No. 12.—REPORT OF THE SUPERINTENDENT ON THE REMOVAL OF THE NAVAL OBSERVATORY.

UNITED STATES NAVAL OBSERVATORY,
Washington, September 15, 1877.

SIR: I found, upon taking charge of the Observatory, that the malarious influences surrounding it were notorious, and that from May to about the middle of October the officers whose services were necessarily in the Observatory at night, paid the penalty in impaired health and in diminished efficiency. The fogs which arise from the river, driven by the prevailing winds, float above the instruments and lessen their usefulness.

Withal, the board of survey created by act of Congress in 1872, stating in their report that the site of the Observatory is needed for projected improvements, recommend that the observatory be removed from its present locality to a better one. They remark, with apparent truth, that the sale of this reservation (No. 4) "would produce a sum sufficient to procure a site abundantly large, where this great Institution in which all Americans take just pride, could be developed on a scale which its merits and importance demand."

For these reasons, I earnestly recommend that a suitable site, north of the city and inside the District of Columbia, be procured for a new Observatory.

The area allotted to this purpose need not necessarily be more than twenty-five or thirty acres in extent; but as much as this is needed, since, if surrounded by dwellings or factories, the smoke would obscure the clearness of vision, the traffic would shake the instruments, and some high structure, if placed upon the meridian near our instruments, might hide a useful part of the heavens.

The present Observatory is in a very dilapidated condition, and it will require $28,909.35 to put it in suitable repair. An inspection of the premises will show better than words how imperative it is to make provision for its renovation.

The expense attending this may be avoided, however, in case Congress shall agree to remove the Observatory to a less objectionable place.

As preliminary to any change of site, the land must be procured, and before the Observatory can be built plans and specifications must be prepared for the work, I have asked for $100,000, or so much thereof as may be necessary, to effect these objects.

I append hereto copies of some papers bearing upon the expediency of removing the Observatory.

I have the honor to be, very respectfully, your obedient servant,
JOHN RODGERS,
Rear-Admiral, Superintendent.

Hon. R. W. THOMPSON,
Secretary of the Navy, Washington.

NO. 1617 H STREET, WASHINGTON,
September 4, 1877.

SIR: In answer to your communication of the 3d instant, requesting my opinion as to the sanitary condition of the Naval Observatory, I

beg to state that I had medical charge of the naval officers and their families at Washington, including the observatory, for two terms, together embracing a period of nearly eight years, viz, from February 1, 1851, to January 11, 1855, and from December 31, 1864, to January 15, 1869.

From this experience, I am decidedly of the opinion that the location of the observatory is unhealthful, caused, as I think, by the malaria from the shores of the Potomac, from which no artificial means will secure it.

In this connection I forward to you a copy of the certificate of death which I made to the Medical Bureau in the case of Capt. James M. Gilliss, United States Navy, Superintendent, who died at the Observatory on the 9th of February, 1865.

I do not doubt that a healthful site for the Observatory may be found on the high grounds to the north of Washington.

I am, very respectfully, your obedient servant,

GEORGE CLYMER,
Medical Director, United States Navy.

Rear-Admiral JOHN RODGERS,
Naval Observatory, Washington, D. C.

Copy of the "certificate of death" made to the Medical Bureau, accompanying letter reporting the death of Captain Gilliss.

I hereby certify that James M. Gilliss, who was a captain in the United States Navy, while attached to the Naval Observatory, and holding the rank above mentioned, departed this life on the 9th day of February, in the year 1865; and that he died of serous apoplexy, as set forth in the record of his case, as follows:

Captain Gilliss had been stationed at the Naval Observatory for some years, a locality noted for its insalubrity. During the last summer and fall he was frequently attacked with intermittent and, on one occasion, with remittent fever, which left him in a weak condition; this, combined with excessive mental labor incident to his position, no doubt caused his death in the line of duty.

GEORGE CLYMER,
Surgeon, United States Navy.

WASHINGTON, D. C., *September* 7, 1877.

SIR: In reply to your letter of the 3d instant, asking my opinion with regard to the sanitary character of the Naval Observatory, I have to state that during my two terms of service there, March 1, 1856, to 22d April, 1859, and from 27th February, 1869, to April 1, 1873, frequent cases of malarial fever occurred among the officers, more especially those engaged in night observations.

The families of the superintendents residing at the Observatory suffered most severely, the effects of which can even yet be observed in some cases.

The ground on which the buildings stand has a subtratum of red sand, porous, and consequently unhealthy. The miasmata from the adjacent marshes, wafted by the prevailing southwest and southeast winds, penetrate every crevice, and the dense fogs from the shores of the Potomac so envelop the entire hill as to render at times observation impossible. I, therefore, consider the observatory, with its surroundings, eminently unhealthy and unsuited for the purposes intended; and that its removal to some more eligible height, westward of the city, not only desirable but necessary; and would further add, that its removal would enable the city authorities to carry out certain contemplated improvements by which the cause of disease in the vicinity would be, in

a great measure, removed, and an enhanced value given to property having now a merely nominal one.

With respect,

CHAS. D. MAXWELL,
Medical Director, United States Navy.

Rear-Admiral JOHN RODGERS,
Superintendent Naval Observatory.

UNITED STATES NAVAL DISPENSARY,
Washington, D. C., September 10, 1877.

SIR: In compliance with your request, contained in a communication dated September 3, instant, asking my professional opinion of the sanitary condition of the location of the United States Naval Observatory, I beg leave to state that during the two years I have been attached to the Naval Dispensary, as attending surgeon, the officers of the observatory have been frequently sick from the effects of constant exposure to malarial influences in the discharge of their official duties.

I do not think that any very material improvement can be made in the buildings or grounds that will effectually eliminate the local causes of disease, even by the expenditure of large sums of money. It seems to me that it would be true economy to remove the entire establishment to some desirable point in the vicinity of Washington, where the necessary sanitary conditions might be fully secured to maintain the personnel of the observatory in the highest state of physical efficiency.

Very respectfully, your obedient servant,

PHILIP S. WALES,
Medical Inspector, United States Navy.

Rear-Admiral JOHN RODGERS, U. S. N.,
Superintendent United States Naval Observatory.

GEORGETOWN, D. C., *September* 5, 1877.

DEAR SIR: In reply to your request, I will state that thirty years, or more, I have, from personal observation, been familiar with the state of health at the present location of the Naval Observatory.

During this whole period it has been subject to malarial fever. I have attended numbers in that locality, and I do not think that any summer or autumn has passed without its development.

Very respectfully,

GRAFTON TYLER, M. D.

Rear-Admiral JOHN RODGERS, U. S. N.,
Superintendent, &c.

WASHINGTON, *September* 7, 1877.

DEAR SIR: In reply to your letter of the 6th instant, I would respectfully state that from over twenty years' experience of practice in the immediate neighborhood of the United States Observatory, I have been convinced of the unhealthfulness of that part of the city, owing to the condition of the river shores and flats.

During both periods of Admiral Davis's command at the Observatory

I was frequently called to attend different members of his family who were suffering from some form of malarial fever, notwithstanding the Admiral took the precaution to send all his household away during the summer and fall months.

Although the Admiral's death was not directly due to malarial fever, yet I am convinced that his residence at the Observatory was one of the principal causes of undermining his health and thus tended to shorten his life.

Very respectfully, your obedient servant,

D. R. HAGNER, M. D.,
1812 *H Street.*

WASHINGTON, D. C., *September* 3, 1877.

MY DEAR SIR: I have had the honor to receive your favor of the 1st instant, requesting me to state if, in my opinion, the disease of which the late Professor Ferguson died was due to malarial agencies which affect the sanitary condition of the Naval Observatory.

In reply, I do not hesitate to say that for a long period, running through many years antecedent to his death, Professor Ferguson was subject to slight attacks of malarial fever, the origin of which I traced directly to his residence at the Observatory.

It is a fact easily authenticated by the observation and experience of the older practitioners of medicine in this city (especially I would refer to Dr. J. C. Hall), that malarial fevers of a severe type have prevailed in that locality since the erection of the Observatory, the families of those naval officers who were required to reside there being compelled to abandon the place during certain months of the year in consequence of its insalubrity.

During the years of 1849 and 1850, I was assigned to the duty of attending the officers stationed at this post, and had ample opportunity to observe the pernicious effects of the malaria which infested that locality. When we consider the immediate proximity of the low marshes stretching along the river at the base of the hill upon which the Observatory is situated, together with the recognized fact that marsh malaria most usually manifests its effects at the nearest eminence from its paludal source and to the leeward of the prevailing wind, we can readily understand why this locality has always been, and will continue to be, subject to malarial fevers. The truth of this statement you can at once verify by obtaining the experience of those officers who have resided at the Observatory during the last quarter of a century.

Very respectfully, your obedient servant,

ALEXR. Y. P. GARNETT, M. D.

Professor YARNALL,
Naval Observatory.

UNITED STATES NAVAL OBSERVATORY,
Washington, September 4, 1877.

SIR: I have received your letter of this instant, asking me to state my opinion, formed from the exercise of my professional duties, in regard to the condition of the atmosphere as affecting the observations which I have been called upon to make.

In answer to your communication, I would state that generally the condition of the atmosphere is favorable to observation, except in the

fall, principally in September and October, we have often to stop work from the fogs which rise from the river after midnight. The banks which you may have observed from a higher position hanging over this part of the city do not, I think, much affect us.

Very respectfully, your obedient servant,

M. YARNALL,
Professor Mathematics, United States Navy.

Rear-Admiral JOHN RODGERS,
Superintendent of the Observatory.

UNITED STATES NAVAL OBSERVATORY,
Washington, September 5, 1877.

SIR: You have requested me to give you an idea of my impressions with regard to malaria at the Observatory from my long experience of twenty-five years' service connected with it.

When I joined the force at the observatory, it being the 2d of October, they were getting over their summer experience, and the impression then was that Commodore Morris would give an order that observations should be suspended during the last summer and first fall months. This order was not given, and we continued in the future to observe during those months.

I cannot give a better idea of the condition of our summer and fall atmosphere than to narrate its effects upon the observers and those who live at or near the observatory.

Captain Maury's family were more or less sick with chills and fever every summer.

Captain Gilliss was in the habit of using quinine very freely, and it is possible that this had something to do with his early death.

Admiral Sands generally removed his family to the country; but by remaining here a little late one summer, he was reduced to the edge of the grave.

The late Rear-Admiral Davis suffered from malaria one fall for two or three months, besides being sick with it at other times; and Mrs. Davis was made quite ill from the same cause.

The most remarkable case, however, was that of the Rev. Moses Springer, one of our aids. He was lame, and obtained board a little east of the Observatory on account of its nearness. I asked him whether he was not afraid to live so close to the Observatory; but being naturally a very robust man, he made light of it. In the summer he was attacked with bilious fever, and only recovered through the skill of the late Dr. Smoot. Upon his return to duty, I told him it was absolutely necessary for him to change his lodgings, but with fatal obstinacy he continued still to board in the same place, and the next summer was attacked with dysentery, from which, after a few months' illness, he died; a man who, I think, under favorable circumstances, would have lived to an advanced age.

The next case was that of the late Professor Hubbard, who persisted in sleeping at the Observatory; was attacked with the typhoid fever, and perished a martyr to malaria. This was a severe loss, for Hubbard was one of the brightest men we have ever had at the Observatory, and his death was deplored by the whole scientific world.

Another case of death from the same cause was that of the late James Ferguson, who as a hard worker has not had his equal. Mr. Ferguson's disease was of the kidneys, which was greatly aggravated by his con-

stant labors in the Observatory. No thought of himself could keep him from his work, and in my opinion he perished much sooner than a man of his strong constitution should have done.

These were causes leading to death, but we have had much sickness among our watchmen, one of whom came near dying with typhoid fever caused by malaria, and others have almost always, as the fall comes around, suffered with chills and fever.

As regards myself, I have had attacks of chills and fever on several occasions, at times when I was called upon to observe the moon after midnight. Even Professor Hall, as strong as he now is, had a long spell in acquiring his acclimation.

We have all grown wiser with time, and we now cease to sleep at the Observatory. This is done at the expense of our efficiency; for it is obvious that an observer should sleep near the Observatory, so that he can be called at any time of night.

Very respectfully, your obedient servant,

M. YARNALL,
Professor of Mathematics.

Rear Admiral JOHN RODGERS, U. S. N.,
Superintendent United States Naval Observatory.

UNITED STATES NAVAL OBSERVATORY,
Washington, D. C., September 10, 1877.

SIR: In answer to yours of the 4th instant, I would respectfully state that I entirely concur with your view that the Observatory should be removed to a better location, for the following reasons:

1. The unhealthfulness of the present location is such as greatly to diminish the working capacity of the observers. I believe that this capacity would be increased by one-third, could the observers safely live and sleep near the seat of their labors.

2. The scheme of city improvements contemplates making the region around the Observatory one of great commercial activity, and contemplates the building of a railroad around the foot of the hill on which the buildings are situated. The execution of this project would be incompatible with the continued efficiency of astronomical work in the present location.

3. The present building is entirely inadequate to the needs of a national scientific establishment, having been built more than thirty years ago, when American astronomy was in its infancy. The large and valuable library of the Observatory is outgrowing the limits which can be provided for its accommodation, and is now housed in what was formerly an observing-room, where its proper protection from the vicissitudes of weather is hardly possible. There is no proper place to store the records of observations and calculations made during the period now including thirty-two years; and the instruments used in the observations of the late transit of Venus have mostly to be stored in a small room, where they are greatly exposed to destruction by fire. The architecture of the present building is such that it cannot be readily enlarged to meet the increasing needs of the establishment. One of the principal instruments of the Observatory (the prime vertical transit) has to remain unused because the room in which it is placed is appropriated as a storeroom and passage-way combined.

How inadequately the present establishment represents the science of the nation may be seen by reflecting that the great Russian observatory

at Pulkowa cost $440,000, and that the Austrian Government is now erecting a new observatory on nearly as large a scale. I conceive that recent improvements in the art of observatory-construction would enable us to build an establishment as efficient as either of these at a much smaller cost.

Very respectfully, your obedient servant,

SIMON NEWCOMB,
Professor, United States Navy.

Rear-Admiral JOHN RODGERS, U. S. N.,
Superintendent of the Naval Observatory, Washington, D. C.

UNITED STATES NAVAL OBSERVATORY,
Washington, September 8, 1877.

SIR: In reply to your letter of the 4th instant, asking for a statement of my judgment of the condition of the atmosphere in regard to astronomical observations in the present location of the Naval Observatory, I have the honor to submit the following:

My experience is that the observations which are chiefly affected by the river fogs are those of faint objects, like comets or the small planets, when observed at a low altitude. During the summer and fall it not unfrequently happens that observations of such objects are prevented by these fogs.

I am, respectfully, &c.,

ASAPH HALL,
Professor Mathematics, United States Navy.

Rear-Admiral JOHN RODGERS, U. S. N.,
Superintendent Naval Observatory.

UNITED STATES NAVAL OBSERVATORY,
Washington, September 8, 1877.

SIR: I have the honor to submit the following statement, in reply to your letter of the 4th instant, asking my opinion, formed from the exercise of my professional duties, with regard to the atmospheric conditions affecting astronomical observations made at this Observatory.

My own experience, taken in connection with a study of the meteorological records of the United States, leads me to believe that the amount of clear weather in the vicinity of Washington is as great, and the atmospheric conditions are probably as favorable, to astronomical work as in any other part of the country.

Occasionally, on an otherwise clear night, a slight mist rises from the river; but it is rarely so dense as to interfere appreciably with meridian work, although perhaps it may sometimes prove an impediment in the case of very faint objects. It should be remarked, however, that these mists are confined to the river valley, and if the observatory had been situated upon the hills to the north of the city, its atmospheric conditions might, perhaps, have been slightly better than they now are.

I am, sir, very respectfully,

WM. HARKNESS,
Professor of Mathematics, United States Navy.

Rear-Admiral JOHN RODGERS, U. S. N.,
Superintendent United States Naval Observatory,
Washington, D. C.

UNITED STATES NAVAL OBSERVATORY,
Washington, August 31, 1877.

SIR: In regard to the location of this Observatory, I have the honor to report:

1. That the peculiar location, in addition to its effect on the health of the officers on astronomical duty, has a very bad influence on the work with the more delicate instruments. At intervals throughout the year, and on nearly *every* night from May to December, the surface of the Potomac River in the vicinity of the Observatory is covered toward the latter part of the night with a mass of vapor or fog, which rises to such a height as completely to envelope the observatory, and is so dense as seriously to interfere with all observations of small objects.

From Georgetown Heights, the whole southwestern portion of the city is shut out of view, and the Potomac basin seems like a lake.

2. The heated air over the dwellings north of the Observatory seriously interferes, in the winter, with the definition of all objects within 25° of the horizon, and the increase of the number of buildings in that section of the city augments the difficulty every year.

Very respectfully,

JOHN R. EASTMAN,
Professor of Mathematics, United States Navy.

Rear-Admiral JOHN RODGERS, U. S. N.,
Superintendent United States Naval Observatory.

PHILADELPHIA, *September* 8, 1877.

ADMIRAL: During a service of nearly five years at the Naval Observatory, I have been engaged on the transit-circle and the 26-inch equatorial, and frequently the subject of observation has been situated low down toward the southern horizon. I have also observed the same object at other observatories, principally at West Point, N. Y., at Dr. Draper's private observatory, at Hastings, on the Hudson, and at the observatory of Harvard College. My invariable experience has been that the atmospheric conditions obtaining at Washington for objects of low altitude are less favorable than those of the other Observatories in question, and this I attribute almost entirely to the proximity of the Naval Observatory to the river, whose fogs and vapors exert a decidedly hurtful influence upon the astronomical work. Their deleterious effects upon the health of the observers is well known, and cannot fail to affect in its way the activity and usefulness of the institution.

At the above-named Observatories upon the Hudson, I have frequently had an opportunity to see the fog lying in and just above the river, and generally in the lower places, while the Observatory itself was in these cases free from fog.

At Washington I have often observed a similar effect, with the difference that the situation of the Naval Observatory exposes it to the effect of the fogs which are escaped by the others. It is the result of my experience that the situation of the Naval Observatory is unfavorable in this regard for the prosecution of observations near the horizon, and this is particularly the case with the important work of the transit-circle and the 26-inch equatorial.

I have the honor to be, Admiral, very respectfully, your obedient servant,

EDWARD S. HOLDEN,
Professor, United States Navy.

Rear-Admiral JOHN RODGERS, U. S. N.,
Superintendent United States Naval Observatory.

Extract from the "Report of the Board of Survey, ordered by Congress, on the improvement of the Harbor of Washington and Georgetown, District of Columbia, 1872."

* * * * * * *

Reservation No. 4, at the southwest edge of the city, on the Potomac, together with a small amount of private property adjoining, is located on a high hill, requiring very steep grades in the adjacent streets. Along the foot of this hill runs the water-front, in such close proximity as to render it totally unavailable for any business purpose. The necessities of the improvements in this part of the city demand the reduction of this hill and high ground to such grades as the authorities of the District may deem necessary to meet the emergencies of the case.

Unfortunately, upon this reservation is situated one of the very best, most ably conducted, and valuable scientific institutions of the government, viz, the Naval Observatory. Although it is most important that this hill be reduced, it should not and must not be at the expense of the slightest injury to this important observatory, but, on the contrary, to its great advantage. Very much better localities can be found within the District, and the sale of the reservation would produce a sum sufficient to procure a site abundantly large, where this great institution, in which all Americans take just pride, could be developed on a scale which its merits and importance demand.

We are authorized by the Secretary of the Navy to state that the department would not object to the removal of the Naval Observatory from its present to a more eligible site within the District.

The materials from this hill can be most profitably used for filling the low grounds between it and Seventeenth street west, as well as the reclaimed lands.

* * * * * * *

A. A. HUMPHREYS,
Brt. Maj. Gen. and Brig. Gen., Chief of Engineers, U. S. A., President.
BENJAMIN PEIRCE,
Superintendent Coast Survey.
O. E. BABCOCK,
Brt. Brig. Gen. and Major of Engineers, U. S. A., Commissioner of Public Buildings and Grounds.
HENRY D. COOKE,
Governor of the District of Columbia.
ALEXANDER R. SHEPHERD,
Vice-President Board of Public Works, D. C.
C. P. PATTERSON,
Hydrographic Inspector Coast-Survey, Secretary.

Letter from Quartermaster-General M. C. Meigs, U. S. A., to the sanitary committee of the board of health of the District of Columbia.

WASHINGTON, D. C., *August* 16, 1877.

I have not carefully studied this subject, but, from what I have observed during my residence in Washington, I am of opinion that the flats which lie above and below the Long Bridge should be diked and filled up; at first dredging a good navigable channel along the water-front, and using the earth excavated from this channel to raise the margin of

the flat, while, at the same time, by a temporary railroad-track, the high ground of Camp Hill, about the Observatory, should be spread over the surface, covering the mud of the flats and that excavated from the Washington channel.

The United States Naval Observatory should be removed to the high grounds north of the city, and thus be lifted above the fogs and malaria which now interfere with astronomical observations by obstructing vision and shattering the nerves of the observers.

This improvement would increase the area of the city and improve its health. It would be a paying improvement, whether the land redeemed was laid out and sold for building purposes or planted and used as a park.

The whole fronts of the reclaimed lands should be supported by a line of revestment of stone, resting on a platform supported on piles.

I am, very respectfully, your obedient servant,

M. C. MEIGS.

WORK OF THE OBSERVATORY AND ITS APPRECIATION ABROAD.

I beg leave also to present in this connection some important considerations in relation to the work of the Observatory and the estimate placed upon it by high authorities in Europe, and I commend these statements to the attention of the department and of Congress.

The work of this observatory, like that of the Greenwich Observatory, England, has always contemplated the direct relation between the highest astronomical results and the improvement of navigation. In England, the Astronomer Royal is directed by his warrant of office "to apply himself with the most exact care and diligence to the rectifying of the tables of the motions of the heavens and the places of the fixed stars, in order to find out the so much desired longitude at sea for perfecting the art of navigation;" and the present Astronomer Royal, Sir George B. Airy, has repeatedly referred to this in his official reports, adding that "the building was erected mainly for observations of the moon and of stars regarded as accessories to lunar observations, the search for comets, &c., forming no part of the usual business of the observatory."

The United States Naval Observatory owes a like origin entirely to those wants and uses of the Navy and merchant marine that pertain to navigation, as plainly appears on reference to the recommendations of the Navy Department, the memorials presented to Congress, and the reports of its committees adopted at its establishment in 1843.

Its legitimate work in the furtherance of navigation has been steadily pursued, evidence of which is to be found in its series of annual volumes and special treatises dating from its establishment, nearly one thousand copies of which are now yearly supplied to a foreign and home demand. The larger part of its work is in fields of immediate practical value.

1. In the determination of positions of important points within our country, it is in nearly constant co-operation with the Coast Survey and with the heads of exploring parties in determining the latitudes and longitudes of cities, boundary-points, and important stations in every part of the States and Territories. Some of these determinations will be found reported in full within its volumes, as the report on the difference of longitude between Washington and Havana, and between Washington and Saint Louis, by Professor Harkness; and that on the

longitude between Washington and Detroit, Mich., and Carlin and Austin, Nev., and between Washington and Odgen, Utah, by Professor Eastman.

All longitudes in this country are now, in the first place, determined by means of or are referred to this Observatory.

2. It co-operates with the Navy in determining positions abroad. It is the depot where the chronometers for the Navy are kept and rated, and from which naval vessels are supplied with them on being placed in commission. Its appliances are always open to officers of the Army and Navy who wish to avail themselves of them in determining positions.

It drops a time-ball at noon from its own dome, and, through the agency of the telegraph wires, a ball at noon also in the city of New York; and gives the time to the wires for transmission through the United States.

3. The institution has from its foundation rendered essential aid to the American Ephemeris and Nautical Almanac by perfecting the tables indispensable to the navigator and the astronomer. Observations of the moon afford the best means for determining the longitude at sea when chronometers fail from any cause, and on land at great distances from a telegraph station. All the tables of the moon being hitherto defective, a study of the causes of these defects has been carried on for some years, founded on a discussion of all accurate observations of eclipses on record from the earliest ages to the middle of the last century.

The appreciation of the work of the Observatory by the astronomical and other scientific authorities of Europe may be learned in part by such references as follow; the only two authorities quoted being the German Astronomical Review, and the Monthly Notices of the Royal Astronomical Society of England.

I.—*Tabular exhibit of the number of pages of the International Astronomical Society's Quarterly Review (Vierteljahrschrift der Astronomischen Gesellschaft), devoted to reviewing the work of various observatories and of the astrnomers connected with them.*

Observatory.	Astronomer.	Number of pages.	Observatory.	Astronomer.	Number of pages.
Pulkova	Struve	24.5	Berlin		12
	Döllen	6		Auwers	34
	Zinger	18		Bremiker	8.5
	Lindemann	8		Förster	2
	Gyldén	49.5			
	Fuss	8.5	Sum		56.5
	Kortazzi	3			
			Melbourne	Ellery	36
Sum		117.5		Robinson and Grubb	20
United States Naval Observatory.		42.5	Sum		56
	Newcomb	59	Paris		29
	Harkness and Frisby	3		Le Verrier	9
				Villarceau	6
Sum		104.5		Löwy	4
				M. C. Wolf	4
Leiden	Kaiser	51.5			
	Valentiner	11	Sum		52
Sum		62.5	Greenwich		28
				Airy	16.5
Bonn	Argelander	60		Glaisher	3.5
Milan	Schiaparelli	57	Sum		48

I.—*Tabular exhibit of the number of pages of the International Astronomical Society's Quarterly Review, &c.*—Continued.

Observatory.	Astronomer.	Number of pages.
Leipsic	Vogel	4.5
	Bruhns	11
	Engelmann	31.5
Sum		47
United States Coast Survey.		3
	Gould	40.5
Sum		43.5
Geneva	Plantamour	40.5
Rome	Secchi	38.5
Dublin	Brünnow	38.5
Bülow's private observatory.	Vogel	35
Radcliffe Observatory		13
	Main	19.5
Sum		32.5
Munich	Lamont	30.5
Stockholm	Bäcklund	11
	Gyldén	18.5
Sum		29.5
Manheim	Schonfeld	28.5
Göttingen	Copeland	28
Kiel	Peters	27.5
Münster	Heis	24.5
Capo di Monte, Naples.	Fergola	22
Hamburg	Helmert	22
Upsala	Nyrén	5
	Schultz	14.5
Sum		19.5
Harvard College		17
	Rogers	2
Sum		19
Utrecht	Höeck	3.5
	Rosén	14
Sum		17.5
Zürich	Wolf	15
Ordnance Survey Office, Southampton.	Clarke	15
Padova	Santini	14.5
Ann Arbor Observatory.	Watson	14.5
Yale College	Newton	12.5
Cape of Good Hope	Stone	11
Kiew	Chandrikow	9
Helsingfors	Krüger	9
Copenhagen	D'Arrest	5.5
	Thiele	3
Sum		8.5
Brussels		2
	Houzeau	5
Sum		7.5
Dudley Observatory		7
Wilna	Berg	6.5
Prague	Hornstein	5
New Haven	Loomis	5
Königsberg		5
Vienna	Littrow	4
Barclay's private observatory	Talmage	0.5
	Barclay	3
Sum		3.5
Altona	Peters	3
Mitau	Napiersky	3
Moscow	Schneizer	2
Cronstadt	Fuss	1.5

An inspection of the preceding table will show that, so far as astronomical work has been reviewed by this leading German Review, during the ten years of its existence, the Naval Observatory has held a large place in its voluntary notices. The acquisitions of the older observatories, accumulated for centuries, amount in their aggregate value to far more than those to which this recent institution can pretend.

II. In the report of the council of the Royal Astronomical Society of England, for the year 1874, the "Washington Catalogue of Stars," observed at the United States Naval Observatory during the year 1845 to

1871, and prepared for publication by Professor M. Yarnall, is noted as "a valuable contribution to observing astronomy; the catalogue containing 10,658 observed stars, and including many observed in the Army and coast surveys, and many from Lacaille's Catalogue, not hitherto re-observed."

In the same report, and in the address of President Cayley, when presenting the society's gold medal for astronomical work, the contributions of Professor Newcomb to the volumes of its observation for the years 1865, 1870, and 1873, and to other publications, are commended as—

Exhibiting, all of them, a combination, on the one hand, of mathematical skill and power, and, on the other, of good hard work devoted to the furtherance of astronomical science. The Memoir on the Lunar Theory contains the successful development of a highly original idea, and cannot but be regarded as a great step in advance in the method of the variation of the elements, and in theoretical dynamics generally; the two sets of planetary tables are works of immense labor, under the guidance of profound mathematical skill.

The announcement is also made that the tabular place of the planet Uranus, for the year 1877, had been incorporated into the British Nautical Almanac from the table calculated by Professor Newcomb. The monthly notice of the Royal Astronomical Society has also given full place to the contributions by Professor Holden on the interesting Ring Nebula in Lyra, on the Trifid Nebula, the Satellite of Uranus, and other astronomical topics.

In the most recent memoir, "L'Astronomia in Roma," from the pen of the distinguished astronomer of Rome, Padre Secchi, the observatories of "Pulkova, Greenwich, Washington," &c., are placed together in the first class.

The search for new objects has never been made a part of the regular work of the observatory, because it has generally been felt that an institution supported at the expense of the nation should confine its energies to fields known to be remunerative. Still, it has taken a place near the highest as a seat of discovery. The first discovery of a planet made on this side the Atlantic was by Mr. Ferguson, in 1854, with the old telescope of the Observatory. Recently, the discovery of two satellites of Mars, by Professor Hall, must, by the common consent of astronomers, rank as the greatest telescopic discovery since that of Neptune in 1846. Considering that Mars is the nearest planet outside the earth, and has been constantly scrutinized ever since the invention of the telescope, it will probably be conceded that this is one of the most surprising discoveries ever made. It may be remarked that the regular work of making observations, with the great telescope, on the Satellite of Saturn, in order to determine the mass of that planet, was not stopped a single night by this discovery.

It will be seen from the foregoing that the observatory is a great national institution, and that within its sphere, it amply returns, both in material value and national fame, all the sums expended upon it.

And it will also be seen that an institution which has given so much fruit should not be confined to a locality where fogs hinder the observations, and malaria undermines the energies of the observers.

Very respectfully,

JOHN RODGERS,
Rear-Admiral, Superintendent.

No. 13.—REPORT OF THE SUPERINTENDENT IN RELATION TO CHANGE OF ORGANIZATION OF THE OBSERVATORY.

UNITED STATES NAVAL OBSERVATORY,
Washington, November 26, 1877.

SIR: It has been mooted whether the observatory could not be advantageously changed in location and in organization, by putting it under a scientific head, and by creating it a national observatory under some other department of the government rather than under that of the Navy, as at present. It may surely be moved to another less objectionable site with manifest advantage. But I am supported by all the professors in my opinion that a naval organization is the most eligible one.

Practical difficulties rise up against transferring the observatory into other hands. The professors here, belonging to a fixed corps, have their positions and their compensation so secured as to conduce to their tranquil pursuit of science without the distractions of uncertain pay or of uncertain tenure of office, and without the fear of being displaced. With uncertain pay, with an ill-secured position—countermining those who undermine, as might be the case in civil service—no useful work could be done. These professors here, officers of the Navy, have been so useful at home, they have done so much to advance our international reputation as astronomers, that to cast them off would be ungracious. Yet what can be done with them? The common-sense answer is, let them alone. It is safe to say that no department of the government, other than that of the Navy, has a trained corps of observers practiced in the delicate manipulation of such large instruments. To educate others would cost time and money.

No corps in which observatory-work is casual, to be abandoned upon occasion for the proper duties of another profession, can compete with the observatories of Europe, in which astronomical observations are a life-long pursuit. The naval professors can do this, and they do successfully accomplish it. Where else under the government can their equals in this line of science be found?

If experience in any calling has actually the advantages which mankind generally attribute to it, then these gentlemen may be expected to do better work than any one not specially trained; and even further, having no special corps duties outside their present occupation, they possess qualifications superior to persons who, having a special profession outside of astronomy and mathematics, may be expected to be better versed in their specialty than in their casual employment as astronomers.

It is to be feared that a national observatory open to the whole body of American astronomers, would gravitate into the political arena, where mere unobtrusive merit would avail less than sectional partialities, or specious pleading supported by personal preference.

The Naval Observatory, arising under naval needs, has grown under its naval organization to a very high place in science. It, as well as the Observatory at Greenwich, having a source in the needs of navigation and of the Navy, is naturally under the Navy Department; and since it sprang up primarily and naturally as Greenwich did, under the Navy, so I think had it better remain there, as Greenwich does.

The changing of the character of the Superintendent from a non-scientific head to that of a professed scientist is a more difficult matter. My own prepossession before I came here was that the Superintendent should as naturally be a scientific man as that the captain of a ship should be

a sailor. The duties, however, are so different that no deduction from the one case establishes a reason in the other.

The statement may, perhaps, be hazarded that authors, inventors, musicians, are naturally jealous of each others' professional reputation. It may be feared that mathematicians and astronomers are not free from the same weakness; and so far as this is true, so far would its existence militate against harmony and efficiency.

The professors, themselves, argue the question of Superintendency more forcibly than I can do, in both its aspects; the majority advocating the continuance of a line officer as head, and an able minority advocating a change in this respect by substituting a scientific head for the institution.

Taking the subject in its whole aspect, I incline to the opinion that the present organization, under which the Naval Observatory has in a short time attained so very high a place among the observatories of the world, is the most eligible one.

"Let well alone" is a safe motto, and here the present organization has done so well that we hazard nothing and keep much in following the homely advice of this proverb, "Let well alone."

Very respectfully, your obedient servant,

JOHN RODGERS,
Rear-Admiral, Superintendent.

Hon. R. W. THOMPSON,
Secretary of the Navy, Washington.

UNITED STATES NAVAL OBSERVATORY,
Washington, November 24, 1877.

SIR: In reply to your request that we should express our opinion concerning the best form of organization for the United States Naval Observatory, we respectfully make the following statement:

The Naval Observatory was established in 1845, through the efforts of an officer of the Navy, the late Capt. James M. Gilliss, and although it was for a time partially diverted from its proper work, its scientific activity has been such that in the short space of thirty-two years it is conceded to have taken rank as the third observatory in the world. All this has been accomplished under the superintendency of line officers of high rank, and under only one of them have any of the interests of the institution suffered.

The superintendent of the Observatory must necessarily take charge of its financial affairs and attend to such of its interests as come before Congress and the Navy Department. These necessarily absorb nearly all his time, and no scientific man can afford to step from the ranks of scientific workers into such a position unless he hopes to build up his reputation upon the labor of others. Furthermore, there are few eminent astronomers who have not made their reputations by the cultivation of some specialty to the exclusion of almost everything else; and were such a man made superintendent of the Observatory, there would be great danger that the whole force of the establishment would be employed in advancing his specialty; thus preventing his assistants from engaging in other work of equal or perhaps greater importance, and greatly limiting the scope and usefulness of the institution.

Were the Observatory transferred to the civil service, it would lose the immense advantages which it now derives from its naval organization; and its scientific success would be endangered by the evils which

are inseparable from a service subject to political influences. The expenses of the institution would also be largely augmented, because it would then have to pay for labor which is now performed by the line and staff officers of the Navy.

It may not be improper to mention that, with a single exception, the success of observatories managed by civilians in the United States has not been such as to encourage a trial of their system; and we regard it as certain that the withdrawal of naval discipline from this institution would be a serious detriment.

In view of these considerations, we are of the opinion that—

1st. The Observatory should remain attached to the Navy Department, that being the branch of the government to which it most naturally belongs.

2d. The superintendent of the Observatory should be a line officer of the Navy, of high rank, whose duty it should be to look after the business affairs of the institution, thus leaving the scientific corps leisure for their proper work.

3d. We think the plan introduced by the present superintendent, Rear-Admiral John Rodgers, of holding a monthly meeting of the officers of the Observatory, at which all the operations of the institution are discussed, is a most excellent one.

Very respectfully, your obedient servants,

M. YARNALL,
Professor of Mathematics.
ASAPH HALL,
Professor of Mathematics.
WM. HARKNESS,
Professor of Mathematics.
J. E. NOURSE,
Professor of Mathematics.
J. R. EASTMAN,
Professor of Mathematics.

Rear-Admiral JOHN RODGERS, U. S. N.,
Superintendent United States Observatory.

THE NAUTICAL ALMANAC OFFICE,
Washington, D. C., November 24, 1877.

SIR: In accordance with your request, I have the honor to express my opinion on the following two points:

1. Whether the Naval Observatory should remain under control of the Navy Department.

2. Whether it is more advantageous that the superintendent should be a line officer of the Navy or a practical astronomer.

In regard to the first point, I am of opinion that it should remain under the control of the Navy Department, be the depot of the naval chronometers, and have the same relation to the Navy Department that the Greenwich Observatory bears to the admiralty of England.

In regard to the second point, I am of opinion that the establishment should have a scientific head, for these reasons:

1. The generally-recognized necessity that every office should, so far as practicable, be under a head professionally acquainted with its routine of business, exists here. The most important duty of the superintendent is to see that the observations made and the work performed are those most advantageous for the objects with which the institution

was founded; that the calculations are correctly made; and that harmonious co-operation is secured among the various departments. The securing of these objects requires a permanent policy, which can only be inaugurated by a scientific head. As illustrative of this view, I may cite the fact that during one-fourth the existence of the Naval Observatory the publication of the annual volumes of observations was entirely omitted, for the reason that only one or two observers made any observations worth publishing. The most important want of national astronomy at the present time is general tables of the stars and planets corresponding to the present state of practical astronomy; and it is a want which can, in its full extent, be supplied only by a large and well-organized observatory, securing the co-operation of many minds in the work of observation and calculation. I am unable to see how such a work as this can be successfully executed, except under constant scientific supervision of the establishment.

2. It seems to me that a new observatory should be built and administered with some one or more well-defined objects in view, and that these objects should be those of the fulfillment of which science stands most in need. Scientific control in some form would, I think, at least tend to assure the public that this end was being secured, though it might be executed by a commission or a board as well as by a single person.

3. I think that individual astronomers of talent are more secure in the recognition of their scientific claims under a head professionally interested in the advancement of science. It is a part of the law of scientific publication—unwritten, indeed, but universally recognized in the scientific world—that every man doing original work should be recognized in its publication as the author of it. But, during more than half of the existence of the Naval Observatory, this right was not recognized, the name of the author being either entirely suppressed, or only mentioned in some other place than the title-page of the work. That this is not now the case is due solely to the liberality of yourself and of your immediate predecessors.

Very respectfully, your obedient servant,

SIMON NEWCOMB,
Professor, United States Navy.

Rear-Admiral JOHN RODGERS, U. S. N.,
Superintendent of the Naval Observatory, Washington.

OBSERVATORY, *Washington, November* 24, 1877.

ADMIRAL: Referring to the questions upon which you desire the opinions of the professors at the Observatory, I have to say:

1st. That, in my opinion, it would be highly detrimental to the interests of the Observatory, and to a less but still an important degree to those of the Navy, should the connection between them be severed.

2d. On the second point, I am of the opinion that the scientific head of the Observatory should be a professional astronomer. It does not seem essential that he should be the executive head, although this is the case at Greenwich, Paris, &c. At Greenwich, the Royal Observatory is under the admiralty, by whom a civilian (Astronomer Royal) is designated to direct the astronomical work of the institution.

The observatory is yearly inspected by a board of visitors, reporting to the admiralty, and, from 1836, the date of appointment of the first

board of visitors, until 1877, no change in this respect has been found desirable. The Astronomer Royal of England has, since 1675, over two hundred years been appointed in this manner from the distinguished professional astronomers of England, and has been directly responsible to the lords of the admiralty, and the system has worked well for two centuries. Although the United States Naval Observatory has attained great usefulness under the present system, there was a period of twelve years, in its short life of thirty-two years (over one-third), when its energies and its appropriations were diverted from its proper field, astronomy, and devoted to another subject, no less important, indeed, but a subject not intended to absorb all its energies. During this time, two professors of the Navy, in spite of many obstacles, by their efforts saved it from total inaction in its own field. This is not likely to occur again; but under a professional astronomer it could not occur.

I therefore respectfully submit that, in my opinion, the best interests of the Navy and of the Observatory would be forwarded by making a professional astronomer the scientific head of the observatory, and by retaining the Observatory directly under the Navy Department. While this is, in my opinion, best, the present efficiency of the institution shows that no change is imperative.

Very respectfully, your obedient servant,

EDWARD S. HOLDEN,
Professor.

Rear-Admiral JOHN RODGERS, U. S. N.,
Superintendent United States Naval Observatory.

No. 14.—REPORT ON FRESH-WATER BASIN NEAR NORFOLK.

UNITED STATES NAVY-YARD, LEAGUE ISLAND, PA.,
September 22, 1877.

SIR: The board of civil engineers, constituted by order of the Navy Department, dated 5th September, 1877, to locate and prepare plans and estimates of cost of a fresh-water basin for iron vessels, in the immediate vicinity of the Norfolk navy-yard, has the honor to submit the following report:

The board convened at Norfolk on the 12th of September, and entered immediately upon its duties. Having finished the necessary examinations in the vicinity of Norfolk, the board adjourned to League Island navy-yard, where it reassembled on the 19th and continued in daily session until the 22d, on which day it was dissolved, its duties having been completed.

Norfolk navy-yard is situated about one and a quarter mile above the city of Norfolk, on the southern branch of the Elizabeth River, a short, tidal, salt-water stream of considerable width, having several small fresh-water affluents. The maps accompanying this report show the topography and hydrography of the section of country examined in relation to the subject before the board. The general features of the land in the vicinity of the river and its branches, as far up as the village of Deep Creek, are a nearly level surface from four to ten feet above ordinary high tide, a sandy soil from ten to twelve feet deep resting upon an irregular stratum of gravel and clay, generally several feet in depth, with an underlying substratum of hard, impervious clay at a depth of

from fifteen to twenty-five feet below high water. Bordering the creeks and bayous are considerable areas of marsh-land at high-water level.

The Elizabeth River, in front of the navy-yard, has a width of about six hundred and fifty feet from the navy-yard quay-wall to the harbor commissioners' line on the opposite side of the river. Above, the width of the deep-water channel decreases and becomes quite irregular, although the shoal-water enlarges to a width of half a mile. There is a depth of water of about thirty feet at mean low tide in front of the navy-yard, but above the yard the depth decreases to about twenty feet. In approaching the general question of the location and construction of a fresh-water basin, three principal subjects were presented for consideration:

1. The most convenient and useful location for the basin in its relations to the navy-yard, and the general requirements of the Navy, having due regard to economy in the purchase of the necessary site.
2. The best and most economical plan of fresh-water supply.
3. The most economical mode of construction consistent with usefulness and durability.

I.

The instructions to the board were, that the location of the basin should be "in immediate connection with the navy-yard," and the interests of the service alike seemed to demand that the basin should be established at a point easily accessible from the yard by both land and water. The land on the banks of the river below the navy-yard being occupied with buildings, wharves, and other improvements, especially on the navy-yard side of the stream, was deemed too valuable to be applied to the purpose contemplated. Above the navy-yard, within a practical distance on either shore and including the shore opposite the yard, are several localities that were carefully examined and considered by the board in regard to their adaptability as sites for the proposed basin.

Opposite the lower end of the navy-yard is a point of land known as St. Helena, embracing about twenty-six acres belonging to the government, and occupied in connection with the yard, for ordnance purposes. Above and adjoining this point is a tract of land known as Cedar Grove, inclosing a small shallow creek or bayou, which has been proposed by the owners of the property as a suitable place for a basin. A similar tract, but having a larger creek, situated a short distance above on the same side of the river, was also suggested as a desirable location. The board having carefully weighed the reasons in favor of these sites, was led to reject them on account of the higher price of the land and improvements, the extra cost of excavating the basin by reason of the considerable elevation of a portion of the land, the increased cost of water-supply as hereafter explained, and mainly on account of the importance of having the basin within easy communication with the navy-yard by land as well as by water. On the western, or navy-yard side of the stream, two locations were examined, one at Back Creek and one at Paradise Creek. The water basin in each of these localities is larger than those on the opposite side of the stream and the construction of a basin would involve less dredging. Paradise Creek possesses the slight advantage over the lower site of having a narrower entrance between the points of the high land, and a larger and deeper body of water, so that the excavation of a basin could be made at less cost. It has also the advantage of being about a mile nearer the source of water-supply

than the lower location. An objection to this site lies in the fact that the creek is used for the purposes of water-communication by persons owning the property on the upper part of the creek. The main objection, however, and one that in the opinion of the board is sufficient to cause the rejection of this site, is its great distance from the navy-yard, rendering land-communication costly and impracticable.

The only remaining location considered worthy of examination was a tract of land embracing Back Creek and lying adjacent to the upper end of the navy-yard. The basin, if located on this tract, would be almost entirely within the low-water line and therefore easily excavated. A considerable part of the land around the basin would be nearly at the height of the established grade of the navy-yard, and the remainder could be easily filled to that height. The land between the basin and the navy-yard, needed in part for the purpose of communication, also requires but a moderate amount of filling, easily made with the material excavated from the basin. The whole tract of land intervening between the basin-tract and the navy-yard would be very valuable and in fact almost indispensable for the future extension of the yard, and could be placed at the proper grade with a very moderate expenditure. The cost of the land would doubtless be more than at Paradise Creek, and the expense of obtaining fresh water would also be greater; but, taking all things into consideration, a fresh-water basin could be constructed on this tract with a smaller expenditure than at any other point. In the opinion of the board the comparatively unimportant objections to this location are far more than counterbalanced by the reasons in its favor above mentioned, and especially by the very important and even paramount advantage that would be gained by the selection of this tract on account of its being within a practicable distance from the navy-yard. In view of these facts, and other minor reasons carefully considered, the board has unanimously arrived at the conclusion that the Back Creek tract, as shown by the accompanying plans, best combines all the requirements for providing in the most convenient, feasible, and economical manner a fresh-water basin of large dimensions, in immediate connection with the yard. The board therefore has selected this site as best adapted to the purpose.

II.

The second general division of the subject, the supply of fresh water for the basin, received the careful consideration of the board, the more especially on account of the intrinsic difficulties and the importance of the problem. This question resolved itself into several sections, each of which was duly investigated:

1. The source of supply.
2. The quality of the water obtainable.
3. The quantity and permanence of supply.
4. Cost.
5. Method of construction of works.

I.—The sources from which a supply of fresh water might be obtained in this vicinity have been examined at different times during the last half century, by various persons in the interests of the United States and the cities of Norfolk and Portsmouth. The results of these examinations show six sources from which it is more or less practicable to obtain a supply of water:

1. West Neck River, in Princess Anne County.
2. Moore's Bridge and the small lakes in that locality, in the same county.

3. The East and West branches of the Nansemond River, near Suffolk.
4. Deep Creek.
5. Lake Drummond, in Dismal Swamp.
6. The Dismal Swamp Canal.

II.—The quality of the water in the West Neck River is inferior, being at times brackish from the influx of salt water from Currituck Sound, as stated by Mr. W. J. McAlpine in his report on the Norfolk water-supply. The water obtainable from the second source is of good quality, but deeply colored with vegetable matter. The Nansemond water is of excellent quality, and but slightly tinged with color. The waters from the last three sources mentioned are similar in quality, that of Lake Drummond being the purest and least discolored. The Dismal Swamp Canal is fed from Lake Drummond and Dismal Swamp, and a considerable overflow enters Deep Creek, except during the dry summer months. The Lake Drummond and canal waters are stained a wine color by the vegetable matter of the Dismal Swamp, mainly by the juniper or white cedar. This has been supposed by some to contain tannin and vegetable acids sufficient to corrode iron. If such were the case, it would, of course, preclude the use of this water for floating iron vessels; but the observed facts do not sustain that theory. A few years ago the lock-gates of the canal-feeder from Lake Drummond were removed after having been immersed in the water twenty-three years, and the iron-work was found nearly free from oxidization. Similar conditions have been noticed in other cases, and the board observed iron-work that had been exposed to this water for many years without injury. Chemical tests of the water confirm the results of these practical observations.

III.—The quantity of water required for the purposes of a fresh-water basin is of course somewhat problematical, owing mainly to the uncertainty as to the size and number of vessels that the future need of the service may require to pass through the tidal lock. After due consideration the board fixed the size of the proposed basin at twenty acres, and estimated the probable future maximum lockage per month at fifteen vessels of two thousand tons each. This attempt at an exact determination of a matter so far in the future, and possessing such variable and indeterminate conditions, is made only because the estimate of the water-supply renders such a basis of calculation necessary. An allowance of 50 per cent. on the tonnage of each vessel is made for waste in lockage. The amount of evaporation in an open basin in the latitude of Norfolk, 36° 50′, and so near the sea, may be safely taken at an average of two-tenths of an inch per day during the hot summer months, with a maximum of three-tenths during short periods. As there is no month without some rain-fall, the compensation from that source and from dew will reduce the net average evaporation, in a summer month of minimum humidity, to about fifteen hundredths of an inch per day. The percolation from the proposed basin, constructed as designed, will be very slight, as the head of water will never exceed six feet at ebb tide, and will generally be but three feet at such time and only a few inches at high tide. The ground surrounding the basin will be mostly mud and clay, saturated with water at each tide, and consequently almost impervious to the water in the basin. The allowance for percolation is therefore small. The leakage from the lock and dam involves a small loss, which has also been taken into consideration. The water required under these assumed conditions has been calculated at a maximum of seventy-five thousand cubic feet per day. For some years to come a smaller quantity would doubtless suffice.

Of the six sources of supply named, the first three and the fifth would furnish a much larger quantity than would be needed. The supply from

Deep Creek would probably not be reliable in periods of extreme drought unless increased by a feeder from Lake Drummond or the canal. The quantity of water that could be drawn from the Dismal Swamp Canal without interfering with its navigation would be sufficient, except during a portion of the summer months. During extreme drought in those months, especially should the navigation of the canal increase very considerably and its condition remain as now, there would be a considerable deficiency. This could be obviated by deepening the feeder from Lake Drummond to the canal, as the capacity of the lake is great enough to furnish a sufficient and permanent supply. It is the understanding of the board that neither the Dismal Swamp Canal Company nor any other parties have exclusive control of the waters of Lake Drummond, the State of Virginia still retaining its right to grant to others the privilege of using a portion of the water. This right it has recently exercised in an act chartering the Portsmouth Water Company.

IV.—The cost of the works necessary for obtaining a supply of water from several of the sources mentioned would be so great as to exclude them from the number available for the purposes in view. This excessive cost would be caused in part by the long lines of pipe to be laid, and in part by the necessity of pumping the water to obtain the proper head. These objections apply to the first, second, and third sources of supply, which were therefore excluded from further consideration by the board. The necessity of pumping, to obtain a head of water from Deep Creek, taken in connection with the probable deficiency in the quantity of water from that source during periods of drought, led the board also to reject that plan. The fifth or Lake Drummond source of supply would involve a very expensive construction should a pipe line be built from the lake, a distance of nearly twenty miles. An open canal could be built from the lake to the northern end of the swamp, to connect with a pipe line from thence to the basin. Such a canal would be cheaper than an iron pipe, but the advantages gained by the construction of a canal could be obtained in a much cheaper manner by deepening the feeder from the lake to the Dismal Swamp Canal and laying a pipe from the canal at Deep Creek to the basin. As the United States has a two-fifths interest in the canal, it is probable that the deepening of the feeder could be arranged without difficulty. The cost of the deepening would be from seven thousand to ten thousand dollars. The adoption of this plan would be identical with that mentioned as the sixth, or Dismal Swamp Canal source of supply. The cost of this sixth plan would be much less than any of the others, while it would also possess all the essential advantages of the other plans. The cost of construction, therefore, determined the source of supply and the board decided in favor of the line from the Dismal Swamp Canal.

V.—The method of construction recommended is, to carry a line of fifteen-inch pipe from the canal above the locks at Deep Creek in a nearly straight line to the basin. At the lowest stage of water in the canal and the highest proposed level in the basin there would be a head, or fall of water in the pipe, of eight feet. With a fifteen-inch pipe and that head the delivery would be 96,000 cubic feet of water per day, which would furnish the 75,000 cubic feet estimated as required and leave a liberal allowance for leakage and other waste. In case the supply of water from the canal shall be found insufficient for the basin, an additional and abundant supply could be obtained by deepening the feeder from Lake Drummond, as already mentioned. Accompanying this report is a profile of the proposed line of water-supply, prepared chiefly from a survey made for the Navy Department by Colonel Baldwin, civil engineer, in the year 1828.

III.

The third general division of the subject before the board, the most economical mode of construction consistent with usefulness and durability, was examined as carefully and as much in minutiæ as practicable.

1. The best method of constructing the works necesary for the water-supply has already been mentioned under that head. Pipes of wood, cement, and sheet-iron, and other materials, have been proposed and used for various water-works; but the best practice of engineers has decided that, for durability, efficiency, and ultimate economy, cast-iron water-pipes are the best. The board, therefore recommends that material for the proposed pipe line from the canal at Deep Creek to the basin. Should it become necessary to increase the water-supply by deepening the feeder from Lake Drummond to the Dismal Swamp Canal, as before mentioned, the work can be best accomplished by dredging and throwing out the material on either side, work that can be done at a very limited cost, so that the expense of dredging out the feeder its entire length of three and a half miles would not exceed ten thousand dollars as stated.

2. The construction of the basin in an economical manner, and yet with due regard for the durability that should appertain to government works of this character, was a subject involving many important questions that were carefully considered by the board. The discussion of the plans suggested for the various works would be too long to enter in this report. The board therefore confines itself mainly to a statement of its conclusions and a general description of the works recommended for the object in view.

After the selection of the Back Creek tract as a site for the proposed basin, its exact location at a distance of 1,000 feet from the upper end of the navy-yard was made for two reasons: First, to lessen the amount of excavation as much as possible; second, to reserve ground and water-front for future addition to the navy-yard, should its extension become necessary. It was deemed inexpedient for several reasons, mainly those of economy, to locate the basin so far to the front as the probable quay-wall line of the navy-yard extension, and therefore the position of the basin was fixed, as represented on the plans, at a distance of 350 feet from the proposed quay-wall line. The size of the proposed basin has been fixed at 900 feet by 968 feet, making 20 acres, including that part of the entrance lock within the rectangle of the basin. The entrance or tidal lock, as shown by the plans, has a length of 400 feet between the gates with a width of 80 feet at the water-line, and has two flooding-gates, the inner one of which can be placed at three different points, so as to make a lock-chamber of 200, 300, or 400 feet in length, as desired. To economize in construction, three-fourths of the lock is placed within the basin. Should the navy-yard hereafter be extended, and the quay-wall built on the line now projected, the lock-chamber can be lengthened, if desired, or an entrance-slip carried out to the quay-wall. It is proposed that the basin be excavated by dredging and the material mainly disposed of in filling up the low ground of the area to be acquired. The height of the water in the basin is designed to be kept usually at or a little above ordinary high tide, and as the water in the basin, and generally that in the lock, will be fresh timber-work can be used in the construction of the walls without fear of injury from the *teredo navalis*. Advantage has been taken of that fact to design a cheap but efficient and durable form of retaining or basin wall, as shown by the plans submitted with this report. The work above low-water line is proposed to be of stone, in order to insure the dura-

bility of the structure. The walls of the tidal lock are proposed to be of timber crib-work surmounted with stone, as shown by the plans. The outer ends of the walls, however, for a distance of 40 feet, will consist of heavy stone abutments rising from a depth of 30 feet below low water and grooved to receive the floating gate. The abutment-wings, each 200 feet long, will be formed of timber crib-work surmounted with a stone wall. That portion of the wood-work of this crib that will project above the mud slope and be exposed to the salt water it is proposed to protect from the teredo by a facing of stone about 2½ feet thick, clamped to the timber and supported by projecting offsets in the crib. The bottom of the crib will project in front sufficiently to give a firm base. By this plan an economical structure can be formed that will be durable in salt water and resist the encroachments of the teredo. The sill of the outer gate is to be formed by a timber floor, 40 by 80 feet, supported by two rows of 12-inch sheet-piling and six rows of round piles, the outer face of the entrance and 40 feet on either side being protected by an additional row of 12-inch sheet-piling. Further protection to the outer sill, the abutments and the wing-walls, will be afforded by riprap, as may be found necessary. The sill for the inner floating gate in its three positions will be formed in a similar but less expensive manner. No floor is deemed necessary for the outer portions of the lock-chamber.

3. The estimated cost of the fresh-water basin and the works appertaining to it is as follows:

Land.		
To be purchased, 81.5 acres, @ $150		$12,225 00
Basin.		
992,000 cubic yards dredging, @ 10 cents	$99,200 00	
3,936 linear feet basin-wall, of masonry, with pile foundations, @ $35	137,760 00	
840 linear feet lock-chamber wall, of masonry and crib-work, @ $40	33,600 00	
2 abutment-wings, cribs, with masonry face and wall	33,113 00	
2 masonry abutments	51,200 00	
2 gates of iron, and appliances	35,000 00	
1 outer-gate floor, sill, and apron	31,550 00	
3 inner-gate sills, &c	20,522 00	
Total for basin proper		441,945 00
Water-supply.		
27,264 linear feet of 15-inch cast-iron pipe, laid, including valves and other appurtenances, @ $2.84	$77,430 00	
Cost of deepening feeder of canal if found necessary	10,000 00	
Total for water-supply		87,430 00
Aggregate estimated cost		541,600 00

The quantity of land deemed desirable to purchase, including all above the low-water mark within the boundary-lines, as shown by the accompanying plans, is 81.5 acres. The cost of this land, it is thought, should not exceed $150 per acre, including the water-front. Should the navy-yard be extend to the proposed quay-wall line, the whole territory added to the yard, including the 81.5 acres purchased, would be 157.8 acres.

From the foregoing estimates it will be seen that the relative cost of the more important parts of this work is as follows:

	Per cent.
Land	2.25
Basin	31.60
Water-supply	16.15

In regard to the basin proper, it may be remarked that a cheaper or make-shift plan of construction might have been adopted by simply providing for dredging out the basin and making no wall excepting on the water-front; but such a basin would be very inconvenient and expensive in use, and the source of constant expense in dredging to keep the proper depth of water, and is not considered by the board as either desirable or practicable. The front wall or dam and the entrance lock are designed upon plans as economical as possible, consistent with durability, in such an exposed situation.

We have the honor to be, very respectfully, your obedient servants,

FRANKLIN A. STRATTON,
Civil Engineer, U. S. N.
A. G. MENOCAL,
Civil Engineer, U. S. N.
U. S. G. WHITE,
Civil Engineer, U. S. N.

Rear-Admiral JOHN C. HOWELL, U. S. N.,
Acting Secretary of the Navy.

No. 15.—STATEMENTS OF INDEBTEDNESS.

Statement showing the indebtedness of, and the amounts due, the Bureau of Provisions and Clothing, June 30, 1877.

	Provisions.	Clothing.	Pay.	Contingent.	Total.
Amount of bills unpaid	$55, 846 31	$385, 189 08	$28, 500 00	.....	.....
Due the various bureaus	37 07	.....	.....	.....	.....
Due "Pay of the Navy" on account of purchases and expenses of storehouses abroad	225, 742 77	3, 489 05	.....	$4, 548 30	.....
Due hospital fund	4, 909 89	.....	.....	.....	.....
To pay freight on foreign stations	.....	.....	.....	3, 935 91	.....
	256, 536 04	388, 678 13	28, 500 00	8, 484 21	$712, 198 38
Amounts due Bureau of Provisions and Clothing from other bureaus	3, 887 65	1, 114 71	.....	2, 077 70	.....
Amount due "Clothing" on account of clothing issued and checked against appropriation "Pay of the Navy"	.....	339, 200 23	.....	.....	.....
Due the bureau from the Marine Corps	1, 699 74	.....	.....	.....	.....
	5, 587 39	340, 314 94	.....	2, 077 70	347, 980 03
July 1, 1877, balance, indebtedness of bureau	280, 948 65	48, 363 19	28, 500 00	6, 406 51	364, 218 35

Statement of indebtedness, Bureau of Construction and Repair.

See page 280, amount there stated	$1, 426, 228 13
Harlan & Hollingsworth Co., 1876, on account of Ranger and Pilgrim	2, 248 10
S. P. Brown, 1877, timber	7, 680 00
Total	1, 436, 156 23

45TH CONGRESS, 2d Session. } HOUSE OF REPRESENTATIVES. { Ex. Doc. 1, Part 4.

REPORT

OF THE

POSTMASTER-GENERAL

OF THE

UNITED STATES;

BEING PART OF

THE MESSAGE AND DOCUMENTS

COMMUNICATED TO THE

TWO HOUSES OF CONGRESS

AT THE

BEGINNING OF THE SECOND SESSION OF THE FORTY-FIFTH CONGRESS.

WASHINGTON:
GOVERNMENT PRINTING OFFICE.
1877.

REPORT

OF

THE POSTMASTER-GENERAL.

WASHINGTON, D. C., *November* 9, 1877.

SIR: The total expenditures of this department during the fiscal year ended June 30, 1877, were $33,486,322 44

The revenues were as follows:

Ordinary receipts	$26,988,444 94	
Receipts from money-order business....	172,409 85	
Receipts for official stamps and stamped envelopes	370,730 47	
		27,531,585 26
Excess of expenditures over receipts		5,954,737 18

In addition to the receipts shown above, there was realized on grants from the Treasury for various purposes, hereinafter detailed, the sum of $7,013,300.00, making the total amount received from all sources $34,544,885.26, an excess over the expenditures of $1,058,562.82. Included in the above statement of expenditures is the sum of $1,163,818.20, paid on liabilities incurred in previous fiscal years, and not properly chargeable to the expenditures of the last fiscal year. Deducting this sum from the aggregate amount leaves $32,322,504.24, as the actual expenditures for the year.

In the receipts from money-order business is included the sum of $63,261.84, received from international money-orders for the year ended June 30, 1875, which, deducted from the total receipts in the above statement, leaves the sum of $109,148.01 as the actual receipts from that source, and reduces the amount of revenues for the year to $27,468,323.42.

The expenditures and receipts of the department therefore, on account of and appertaining to the business of the last fiscal year, (excluding expenditures and receipts on account of previous years,) are as follows, viz:

Expenditures	$32,322,504 24
Receipts, ordinary, from money-order business and from official stamps	27,468,323 42
Leaving an excess of expenditures over receipts of.....	4,854,180 82

The expenditures during the fiscal year were $222,834.86 more than those of the preceding year, and $3,353,483.55 less than the estimates therefor.

The total receipts for the year were $1,112,612.24 (or 4.0 + per cent.) less than those of the preceding year, and $1,126,618.54 (or 4.0 + per cent.) less than the estimates therefor.

The decrease is largely in the item of official postage-stamps, the amount derived from which, during the last fiscal year, was only $370,730.47, while in the previous year it was $1,281,389.43. Excluding official postage-stamps and money-order receipts from both fiscal years the reduction in ordinary receipts was only $183,592.29, or about three-fifths of one per cent.

As explained by note appended to the summary of receipts and expenditures in the accompanying report of the auditor, the appropriation for official postage-stamps for the Post Office Department was not available as revenue, because of the terms of the act making the appropriation, and accordingly the amount of such stamps used by this department during the last fiscal year ($656,095.50) does not appear either in the aggregate receipts or in the receipts from official postage-stamps.

The expenditures and receipts by fiscal quarters, and the increase or decrease therein, as compared with the corresponding quarters of 1874–'75 and 1875–'76, are shown by table No. 3, which accompanies the report of the Third Assistant Postmaster-General.

The following amounts were drawn from the Treasury during the fiscal year, on appropriations:

For steamship service to China and Japan	$250,000 00
To supply deficiencies in the revenues for the year ended June 30, 1877	5,250,000 00
To meet deficiencies of previous fiscal years	1,450,000 0
To supply a deficiency in the appropriation for postal cards for fiscal year ended June 30, 1876	62,300 00
In pursuance of act of Congress (Statutes, chap. 105, p. 355,) of March 3, 1877	1,000 00
Total	7,013,300 00

The estimated expenditures for the fiscal year ending June 30, 1879, are		$36,427,771 00
The ordinary revenues are estimated at 3 per cent. over the last fiscal year, making	$27,798,098 28	
Estimated revenue from money-order business	200,000 00	
Estimated revenue from official postages	1,036,000 00	
Total estimated revenue for the fiscal year ending June 30, 1879		29,034,098 28
Estimated excess of expenditures to be appropriated out of the general Treasury, as a deficiency		7,393,672 72

Of the appropriations for deficiencies, there were unexpended on June 30, 1876, the following amounts:

For fiscal year ended June 30, 1875	$564,353 13
For fiscal year ended June 30, 1876	2,852,705 00
	3,417,058 13
Amount appropriated for fiscal year of 1876–'77	5,667,498 00
Making a total of unexpended appropriations for deficiencies, undrawn and available, of	$9,084,556 13

During the last fiscal year the following amounts were drawn on account of payments for previous fiscal years, viz:

For fiscal year of 1874-'75	$450,000 00	
For fiscal year of 1875-'76	1,000,000 00	
For fiscal year of 1876-'77	5,250,000 00	
	6,700,000 00	
Add amount of balance of appropriation for 1874-'75, carried to surplus-fund of the Treasury	114,353 13	
A total of		$6,814,353 13
Amount of deficiency-appropriations undrawn and available for payments of indebtedness to June 30, 1877		2,270,203 00
Against the above sum there are chargeable the following unsettled accounts, estimated:		
Mail-service under contract, or recognized, not yet reported for payment	$122,354 43	
Mail-service unrecognized	522,719 03	
Total		645,073 46
Leaving, after settlement of all liabilities to June 30, 1877, a net balance on deficiency-appropriations, of		1,625,129 54

POSTAGE-STAMPS, STAMPED ENVELOPES, AND POSTAL CARDS ISSUED.

The number of ordinary stamps issued during the past fiscal year was 689,580,670, valued at	$18,181,676 00
Newspaper and periodical stamps, 1,388,709	1,000,605 10
Stamped envelopes, plain, 84,285,700	2,281,574 11
Stamped envelopes, request, 64,374,500	2,069,995 65
Newspaper-wrappers, 21,991,250	265,362 00
Postal-cards, 170,015,500	1,700,155 00
Official postage-stamps 13,867,145	614,107 20
Official stamped envelopes and wrappers, 14,750,445	412,361 41
Aggregating, 1,060,253,919	26,525,836 47

There has been a general decrease in the issues of these articles from those of last year, as shown by the following table:

Description.	Fiscal year ended June 30, 1876.	Fiscal year ended June 30, 1877.	Decrease.	
			Value.	Per cent.
Ordinary postage-stamps	$18,773,454 00	$18,181,676 00	$591,778 00	3.15+
Newspaper and periodical stamps	945,254 75	1,000,605 10	*55,350 35	*5.85+
Stamped envelopes, plain	2,280,318 74	2,281,574 11	*1,255 37	*.05+
Stamped envelopes, request	2,079,578 30	2,069,995 65	9,582 65	.46+
Newspaper-wrappers	273,723 50	265,362 00	8,361 50	3.05+
Postal cards	1,508,150 00	1,700,155 00	*192,005 00	*12.73+
Total decrease, (allowing for increase in items of newspaper-stamps, plain stamped envelopes, and postal cards)			361,111 43	1.39+
Official stamps and stamped envelopes and wrappers	1,092,942 43	1,026,468 61	66,473 82	6.08+
Aggregate	26,953,421 72	26,525,836 47	427,585 25	1.58+

*Increase.

In transmitting the above supplies, there have been lost in the mails but two packages, of the aggregate value of $82.15; an unprecedentedly small loss.

Under the present system of collecting postage on newspaper and periodical publications mailed to regular subscribers from the offices of publication, (which system originated in the act of Congress approved June 23, 1874,) there has been collected during the year on this class of matter the sum of $1,024,719.16, derived from 40,865,246 pounds at 2 cents per pound, and 6,913,808 pounds at 3 cents per pound. The increase in the whole amount collected over that for the preceding year was $10,564.89, or 1.04+ per cent.

The operations of the Dead-Letter Office are fully stated in the report of the Third Assistant Postmaster-General, and tables Nos. 10, 11, 12, 13, and 14, appended thereto. This business may be briefly summarized as follows: Total number of letters received during the year 3,288,290, an average of 10,676 for each working day, and classified thus: ordinary mail letters, 2,113,827; local or drop, 411,600; of domestic origin returned from foreign countries, 108,486; foreign origin, 186,181; returned to post offices by proprietors of hotels, 57,186; held for postage, 313,464; misdirected, 67,301; fictitious, 16,794; containing unmailable matter, 2,094; ship, 2,261; without address, 7,020; and 5,909 registered letters. They are further classified according to their contents as follows: 24,580 contained $40,062.41 in money; 11,421 contained commercial paper to the value of $1,301,780.49; 804 contained deeds, mortgages, leases, railroad and other passage tickets, pension-certificates, and bank-books; 38,265 contained postage-stamps; 27,185 contained photographs; 26,348 contained jewelry, clothing, books, chromos, music, merchandise, &c.; 23,025 contained receipts, bills of lading, affidavits, abstracts of title, paid notes, and cancelled obligations of all sorts.

The amount of money taken from letters which could not be restored to the owners and deposited in the Treasury was $4,754.

A comparison of the gross receipts of all classes of dead letters with that of last year shows a reduction of 296,454, or about eight per cent.; which is accounted for by the fact that a less number of letters was mailed during the year and the increased efficiency of the delivery service.

The number of registered letters and packages forwarded through the mails during the year was 4,378,127, of which 145,908 were addressed to foreign countries. The amount of fees collected (exclusive of postage) was $367,438.80; an increase over the previous year of $32,022.20, or nearly 11 per cent. The number of registered packages of postage-stamps, stamped envelopes, postal cards, United States bonds, currency, and internal-revenue stamps carried for the Post Office and Treasury Departments was 375,453, valued at $150,677,877.01, of which only one package of postage-stamps, valued at $74, and one of stamped envelopes, valued at $8.15, were lost in transit. In the light of such

evidence as this, the public may safely rely upon the registry system as a sure means of conveyance for valuable matter.

CONTRACTS.

There were in the service of the department on the 30th of June, 1877, 6,018 contractors for the transportation of the mails on public routes.

There were at the close of the year 1,653 special offices, each with a mail-carrier, whose pay from the department is not allowed to exceed the net postal yield of the office.

Of public mail-routes in operation, there were 9,234, (of which 958 were railroad; being an increase of 46 routes of this class over the previous year,) aggregating in length 292,820 miles; in annual transportation, 147,353,251 miles; in annual cost, $15,384,895. Adding the compensation of railway post-office clerks, route-agents, mail-route messengers, local agents, and mail-messengers, amounting to $3,144,343, the aggregate annual cost will be $18,529,238.

The service was divided as follows:

Railroad-routes: length, 74,546 miles; annual transportation, 85,358,710 miles; annual cost, $9,053,936; about 10.5 cents per mile.

Steamboat-routes: length, 17,685 miles; annual transportation, 4,038,-238 miles; annual cost, $666,989; about 16.5 cents per mile.

Other routes, upon which the mails are required to be conveyed with "celerity, certainty, and security:" length, 200,589 miles; annual transportation, 57,956,303 miles; annual cost, $5,663,970; about 9.77 cents per mile.

There were at the close of the year 4,098 offices supplied by mail-messengers, at an annual cost of $659,497.

There was an increase over the preceding year in length of routes of 11,022 miles; in annual transportation, 11,083,543 miles; and in cost $183,755. Deducting the decrease in cost for railway post-office clerks, route, local, and other agents, $15,565, the total increase in cost was $168,190.

The railroad routes have been increased in length 2,198 miles, while the cost has been decreased $489,198. This decrease is attributable to the operation of the act of July 12, 1876, reducing the compensation to all railroads for the transportation of the mails ten per centum per annum on allowances for weight of mails, and the allowance of eighty per centum per annum, after such reduction, where the railroad was constructed in whole or in part by a land-grant made by Congress.

These reductions do not (under the decision of the Attorney-General) affect railroads carrying the mails under contract, except where endowed with a grant of land, nor allowances for railway post-office cars.

The readjustment of pay (table F) in New England and the States of New York, New Jersey, Pennsylvania, Delaware, Maryland, Virginia, and West Virginia, for the regular contract term of four years commencing July 1, 1877, and on certain routes in other States and Territo-

ries, as far as complete returns have been received, shows a reduction of $2,078.17 per annum against the cost to June 30, 1877. The amount deducted under the act of July 12, 1876, is $465,851.29 per annum. Of this amount, the sum of $38,673.02 was not deducted prior to the 30th June, 1877, because of service under contract to that date. The actual result is, therefore, an increase of $36,594.82 over the cost to June 30, 1877.

The cost of railroad service to June 30, 1877, was $9,053,936. The appropriation for the current fiscal year is $9,250,000. The increase in the cost of the service to June 30, 1877, was 4.67 per centum; this rate of increase applied to the $9,053,936, would make the cost for the current year $9,476,754.81. This sum is used as the basis upon which to cast the estimate for 1879, and anticipating a marked revival of business, the rate of increase is placed at 7 per centum, making the estimate for 1879 $10,140,126.

Of the $260,714 given in the last annual report as the reduction under the 13th or land-grant section of the act of July 12, 1876, $51,274 has been decided by the law-officer to have been improperly deducted, and has therefore been refunded.

Within a comparatively recent period many cases have been presented in which compensation is claimed under the act of March 3, 1873, as for separate and independent routes, over different railroad-tracks, for mails carried in different trains, run by one or more companies over the same track.

If this course were adopted, instead of aggregating the weight of mails carried over one track, as has been the custom of the department, the cost of carrying the mails would be largely increased. And in view of this the case is presented for consideration.

Under postal regulations railroad companies are required to deliver the mails to terminal offices as well as all intermediate offices located within eighty rods of the stations. It is believed that this service should be performed by the government. For some time past negotiations have been made with railroad companies to deliver mails to offices to which they were not required by the regulations to take the mails. This service has been thrown open to competition from July 1, 1877, which has resulted in an annual saving of $23,197.58 to the department.

The amount of fines imposed upon contractors and deductions made from their pay for failures and other delinquencies for the fiscal year ending June 30, 1877, was $89,755.46, and the amount remitted for the same period was $25,473.32, leaving the net amount of fines and deductions $64,282.14.

A table (H) appended hereto exhibits, in detail, the number, description, and cost of mail-bags and mail-catchers, and of mail locks and keys, purchased under contracts during the last fiscal year.

The total number of new mail-bags purchased and put into service was 93,700, of which 79,000 were for the transmission of printed and third-class matter, and 14,700 were chiefly for letters.

The total cost of mail-bags and mail-catchers, including repairs, labels, &c., amounted to $165,641.29. Compared with the previous year, there was a decrease in the quantities purchased of 10,094 mail-bags and 450 mail-catchers, and a decrease in expense of $43,206.20.

This reduction of expense is due in a great measure to an economical and judicious system of repairs inaugurated by my immediate predecessor, and still in successful operation. By the system referred to, the cost of repairing damaged mail-bags during the year was $37,389.71. Exactly the same repairs, had they been made by the former methods, would have cost about 92 per cent. more, or the sum of $72,926.66. Largely increased quantities of damaged mail-bags repaired at the lowest cost and put into service during the year curtailed both the quantities and expenses of *new* mail-bags which it would otherwise have been necessary to have purchased and paid for at contract prices.

The total cost of mail locks and keys during the fiscal year was $13,475. The total cost during the preceding year was $16,720.95.

The special agents of this department have performed their duties with efficiency and an intelligent understanding of the responsibilities of their several positions. Their success during the past year, under the improved system of postal surveillance now in operation, in arresting and bringing to justice violators of the law, has increased the security of the mails. In addition to their regular duties in connection with mail depredations, much of their time has been devoted to the service of the several bureaus, and especially to the examination of the genuineness and sufficiency of postmasters' bonds a practice recently adopted to protect the government from losses which have occurred in former years from insufficient or fraudulent bonds of postmasters.

The number of persons arrested for offenses against the postal laws during the year ended June 30, 1877, was 543; an increase of 104 over the previous year. Of these, 371 were held for trial in the United States courts, with the following results, viz: Convicted, 157; acquitted, 16; not yet tried, 198. In addition, 172 persons, whose offenses it was deemed advisable to prosecute in the State courts, such as burglaries of post-offices, highway robberies, murder of mail-riders, &c., have been surrendered to the State authorities for trial.

The total number of complaints was 7,039, of which 2,289 were for registered letters, of the reported value of $54,410.82; ordinary letters, 3,928, reported to contain in money, drafts, &c., $258,072.78; making an aggregate of losses amounting to $312,483.80, and miscellaneous cases numbering 822. Of the registered letters, 714 were recovered; 266 lost and rifled, with inclosures valued at $10,510.60, were made good; and 899, of the reported value of $43,900.22, were irrecoverably lost, leaving 410 still under investigation. This statement includes the destruction of registered letters by railroad accidents, &c., except those destroyed in March, 1877, by the burning of the postal car at Sedan, Ind.

The percentage of actual losses, compared with the number of letters

reported registered during the year—4,348,127—is about one-fiftieth of one per cent., or one in five thousand sent through the mails.

A tabular statement hereto appended shows that the number of railway post-office lines in operation on the 30th of June, 1877, was 64, extending over 17,761 miles of railroad-routes; an increase of one line and 48 miles compared with the preceding year.

The number of clerks in the service at the end of the fiscal year ending June 30, 1876, was 1,042, representing an annual expenditure of $1,278,340.

The number of clerks in the service at the end of the fiscal year ending June 30, 1877, was 1,046, representing an annual expenditure of $1,222,690; showing an increase of 4 clerks and a decrease in salaries of $55,650.

The actual expenditures for railway post-office clerks for 1876 were $1,223,750.19. The actual expenditures for 1877 were $1,223,569.41; a decrease of $180.78.

The annual mileage of service performed by railway post-offices was 16,898,040 miles; an increase of 1,688,125 over that of last year.

The work of preparing and publishing post-route maps has been delayed in consequence of inadequate appropriations. All that has been accomplished during the year with the sum appropriated for this work has been the preparation of new editions of most of the maps previously issued. To enable the department to prepare and issue post-route maps in permanent form of the Pacific States and Territories, Kentucky, Tennessee, Georgia, Texas, Arkansas, and the Indian Territory, I recommend an increased appropriation of a sufficient amount to insure their execution.

FOREIGN MAILS.

The total weights of the mails dispatched from the United States to postal-union countries during the year were as follows: Letters, 91,401,230 grams, equal to 3,224,427 ounces; printed matter and samples, 377,260,364 grams, equal to 13,308,887 ounces; being an increased weight over 1876 of 74,518 ounces of letters and 1,289,205 ounces of printed matter and samples. A statement is appended of the weight of mails dispatched to each postal-union country.

The cost of the United States transatlantic mail-steamship service for the year 1877 was $159,742.48, being a reduction of $12,600.61 from the cost of the same service for the year 1876. The payments made of the sea-postages, at the rates of 6 francs 50 centimes per kilogram of letters and 50 centimes per kilogram of other mail matter, to the foreign lines, and of $3.25 per kilogram of letters and 10 cents per kilogram of other mail matter to the American line from Philadelphia, were as follows:

The Cunard Line, for 52 trips from New York and 46 trips from Boston to Queenstown and Liverpool	$38,337 21
The Hamburg American Packet Company, for 51 trips from New York to Plymouth, Cherbourg, and Hamburg	35,220 68

The North German Lloyd of Bremen, for 53 trips from New York and 25 trips from Baltimore to Southampton and Bremen	$24,838 13
The Liverpool and Great Western, (Williams & Guion,) for 41 trips from New York to Queenstown and Liverpool	24,381 56
The White Star Line, for 27 trips from New York to Queenstown and Liverpool	15,156 15
The Inman Line, for 26 trips from New York to Queenstown and Liverpool	12,747 35
The Canadian Line, for 52 trips to Liverpool	3,357 57
The Anchor Line, for 53 trips from New York to Glasgow	1,820 07
The French Line, for 42 trips from New York to Havre	2,291 60
The American Steamship Company, for 46 trips from Philadelphia to Queenstown and Liverpool	1,592 16
The Netherlands Steamship Company	3 56
Total	159,746 04

The payments made to the respective steamship lines on account of transportation of the British and French closed mails from New York to Europe were as follows:

To the Cunard Line	$8,102 36
To the Liverpool and Great Western Line	1,226 06
To the Inman Line	928 16
To the White Star Line	761 93
To the Hamburg American Packet Company	331 07
To the North German Lloyd of Bremen	18 72
Total	11,368 30

The United States postages on mails conveyed to and from the West Indies, Panama, Central America, Brazil, Mexico, Bermuda, Nova Scotia, New Granada, Venezuela, Honolulu, the Australian colonies, Japan, and China amounted to $107,363.55, and the cost of the sea conveyance thereof was $47,840.49.

The total cost of the United States ocean mail steamship service for the year 1877 (including $250,000 paid from special appropriation for steamship service to Japan and China) was $457,586.53. In addition to this, the sum of $11,368.30 was paid on account of foreign closed mails transported from New York to Europe, and reimbursed to this department in the settlement of the quarterly accounts with the British and French post departments.

The territory of the General Postal Union, formed by the treaty of Berne, has been enlarged by the accession of the following countries and colonies, under the provisions of the special arrangement signed at Berne the 27th of January, 1876, viz:

The British colonies of Hong-Kong, Ceylon, the establishments of Detroit, (Straits Settlements,) Labuan, Mauritius and its dependencies, British Guiana, Trinidad, Jamaica, and the Bermuda Islands, admitted from April 1, 1877.

The Spanish colonies in Africa, America, and Oceanica, and the Netherland colonies in the East Indies, Netherland Guiana, Curaçoa and dependencies, admitted from May 1, 1877.

The Empires of Japan and Brazil, and the Portuguese colonies, admitted from June 1, 1877.

Persia, Greenland, and the Danish colonies of St. Thomas, Ste. Croix, and St. Jean, admitted from September 1, 1877.

Copies of the several diplomatic acts confirming the admission into the General Postal Union of these several countries and colonies are appended to this report.

Application has been made by the British post department for the admission of the colonies of Gold Coast, Senegambia, Lagos, and Sierra Leone, in Western Africa, and the Falkland Islands and British Honduras, from January 1, 1878.

The original postal-union territory comprised the United States of America, the continent of Europe, Asiatic Russia, Asiatic Turkey, Egypt, Algeria, the Faroe Islands, Heligoland, the Island of Malta and its dependencies, the Ionian Isles, Madeira and the Azores, the Balearic Isles, the Canary Islands, the Spanish possessions on the north coast of Africa, and the Spanish postal establishments on the west coast of Morocco. This territory has been extended by the addition of Aden, (Arabia,) the Empire of Brazil, the Bermudas, British Guiana, British India, Ceylon, the Danish colonies of St. Thomas, Ste. Croix, and St. Jean, the French colonies in Asia, Africa, America, and Oceanica, Greenland, Hong-Kong, Jamaica, Japan, Labuan, Mauritius and its dependencies, the Netherland colonies in Asia, Oceanica, and America, Persia, the Portuguese colonies in Asia and Africa, the Spanish colonies in Asia, Africa, America, and Oceanica, the Straits Settlements, (Singapore, Penang, and Malacca,) and Trinidad, West Indies.

The principal countries and colonies of the world having an organized postal service, and not yet embraced in the postal union, are the British North American Provinces, Mexico, all Central and South American countries except Brazil and British, French, and Dutch Guiana, the Sandwich Islands, and the British Australian colonies. When these shall have been admitted to the union, the international postal service of the entire world will be organized on a single basis of uniform postage rates, with the most liberal facilities for mail exchanges between the peoples of all nations.

An adjourned meeting of the international postal congress will be convened at Paris in the spring of 1878, agreeably to the provisions of Article XVIII of the Berne treaty, for the purpose of perfecting the system of the union by introducing into it such improvements as experience of its practical workings has shown to be necessary to complete the system. Many important modifications of the provisions of the present treaty are proposed for consideration and decision by that congress, some of which are of special interest to this country, and it is my purpose to send as delegates experienced officers of this department to represent the United States.

The island of Cuba having been admitted to the General Postal Union,

the United States resident mail-agency at Havana was discontinued on the 30th of June, 1877.

Additional articles of agreement have been concluded with the post-office departments of the Dominion of Canada and of Newfoundland, copies of which are annexed, providing that all money-orders mailed at the exchange offices in the United States and addressed to payees in the Dominion of Canada and Newfoundland shall be transmissible in the mails free of postage.

The negotiations for postal conventions with Peru, Victoria, and Chili, referred to in the last report, have been unsuccessful; but it is hoped that improved postal facilities will soon be established with those countries by their adhesion to the General Postal Union treaty. There is no portion of the world with which the United States has as unsatisfactory mail arrangements as with South America. The correspondence for Brazil and other countries on the east coast, in the absence of any regular, direct mail-steamship communication, is forwarded via England; and the correspondence for countries on the west coast, sent via Panama, can only be prepaid to the ports of debarkation on that coast, with no assurance of its being forwarded to interior destinations, and always leaving a local postage charge, excessive in amount, to be collected from the addressees on its delivery. The adhesion of all the South American countries to the postal union would greatly liberalize and perfect our postal intercourse with them; and it is hoped that the special effort which is being made by the "Associated Industries of the United States," an organization of the leading merchants and manufacturers of the city of Philadelphia, to urge those countries to join the Postal Union may be attended with success.

The exchange of correspondence with other countries under the provisions of the General Postal Union treaty is greatly embarrassed by the fact that, under the laws of the United States, customs duties are chargeable on all books received in the mail from foreign countries, which have not been printed more than twenty years. The stipulations of that treaty provide for the exchange of books of limited weight in the mails between the respective countries of the Union, and also that any article whatever liable to customs duties shall not be admitted for conveyance by the post. It has been the practice to deliver dutiable books received in the mails from foreign countries to officers of the customs for the collection of the customs duties chargeable thereon by our revenue laws; but, as the International Bureau has recently construed the provisions of the Postal Union treaty as not authorizing the collection of customs duties on books sent by mail within the limits of the Union, and as requiring the postal administrations which cannot give circulation free from duty to the books sent to them from foreign countries, to return them as articles of undeliverable correspondence, it has been found necessary to modify the post-office regulations governing the treatment of dutiable books received in the mails from other countries, by directing their return in future to the country of origin.

Books are universally admitted as mailable matter in the postal exchanges between all enlightened nations, and although in most countries of Europe they are liable to customs duties, such duties are never claimed for books admitted to circulation by the post. It seems desirable, therefore, in the interest of authors and other private correspondents receiving books of small size and value by the international mails, without any purpose of evading customs duties, that provision should be made by law, under such safeguards against fraud as may be deemed proper, authorizing their delivery free of duty.

APPOINTMENTS.

The report of the appointment office shows the following:

Number of post-offices established during the year	1,825
Number discontinued	863
Increase	962
Number in operation June 30, 1876	36,383
Number in operation June 30, 1877	37,345
Number filled by appointments of the President	1,397
Number filled by appointments of the Postmaster-General	35,948

Appointments were made during the year—

On resignations and commissions expired	4,800
On removals	711
On changes of names and sites	215
On deaths of postmasters	397
On establishment of new offices	1,825
Total appointments	7,948
Number of cases acted on during the year	8,914

The number and aggregate compensation of special agents, railway-post-office clerks, route-agents, mail-route messengers, and local agents in service during the year ended June 30, 1877, were:

*38 special agents	$146,043 40
1,051 railway post-office clerks	1,222,690 00
1,065 route-agents	994,540 00
248 mail-route messengers	162,086 00
136 local agents	105,530 00
Total	2,630,889 40

The following table shows the number of employés in the Post-Office Department; also the number of postmasters, contractors, clerks in post-offices, route-agents, railway-post-office clerks, and other officers in service June 30, 1876, and June 30, 1877, respectively:

Departmental officers and employés:

	1876.	1877.
Postmaster-General	1	1
Assistant Postmasters-General	3	3
Superintendent of money-order system	1	1

*Other special agents charged to separate appropriations.

	1876.	1877.
Superintendent of foreign mails	1	1
Chief clerk to the Postmaster-General	1	1
Chief of division of dead letters	1	1
Chief of division of depredations	1	1
Chief of division of postage-stamps, stamped envelopes, and postal cards	1	1
Chief of division of free-delivery service	..	1
Topographer for department	1	1
Chief clerks of bureaus	5	5
Disbursing-officer and superintendent of building	1	1
Stenographer	1	1
Clerks, messengers, watchmen, &c	363	354
	381	373

Other officers and agents:

Postmasters	36,383	37,345
Contractors	6,126	6,018
Clerks in post-offices	4,718	4,465
Letter-carriers	2,269	2,265
Route-agents	1,017	1,065
Railway-post-office clerks	1,042	1,051
Mail-route messengers	219	248
Local agents	137	136
Special agents	62	61
Total in service	52,354	52,654

No increase in the number of free-delivery offices and no extensions to additional territory in cities where the service is already established were made during the year, for want of sufficient appropriations. The service was, however, better systematized and made more thorough and reliable.

The general results during the year are highly satisfactory, showing a large increase in postage on local matter, and a decrease in the cost of the service.

The increase in postage over last year was 9 per cent., and the decrease in expenses 4.4 per cent. The postage on local matter exceeded the entire expense by $360,977.98. The average cost per piece of handling the matter was 2.83 mills, a reduction of .3 of a mill as compared with the last year. These results were reached by increasing the work and reducing the pay of the carriers.

The aggregate results for the fiscal year were as follows:

Aggregate results of free-delivery service for the fiscal year ending June 30, 1877.

		Increase over last year.	Decrease over last year.
Number of offices	87	.....	.....
Number of letter-carriers	2, 265	.....	4
Mail letters delivered	197, 375, 847	7, 716, 404	.....
Mail postal cards delivered	28, 965, 946	5, 013, 565	.....
Local letters delivered	57, 017, 443	3, 243, 490	.....
Local postal cards delivered	23, 654, 728	3, 691, 438	.....
Registered letters delivered	1, 149, 682	79, 984	.....
Newspapers delivered	87, 848, 807	7, 173, 767	.....
Letters collected	199, 566, 433	.....	713, 646
Postal cards collected	40, 237, 597	6, 287, 094	.....
Newspapers collected	30, 746, 995	2, 293, 909	.....
Whole number of pieces handled	666, 563, 478	34, 786, 005	.....
Pieces handled per carrier	294, 244	15, 806	.....
Total cost of service, including pay of special agent	$1, 893, 619. 85	.....	$37. 566.66, (or 4.4 + p. c.)
Average cost per piece in mills*	2. 83	.....	.30
Average cost per carrier*	$834. 66	.....	$36. 42
Amount of postage on local matter	$2, 254, 597. 83	$189, 036. 10 (or 9 p. c.)	.....
Excess of postage on local matter over the total cost of service.	$360, 977. 98	.....	.....

* Based on the aggregate ($1,890,487.95) paid carriers, including incidental expenses at the several offices.

In consequence of the reduction made by Congress at its last session in the appropriation for this service, I was compelled to still further reduce the pay of letter-carriers, a class of postal employés performing an exacting and arduous service at a very small compensation. The reduction made in this appropriation rendered it impracticable to extend this service to meet the requirements of business and keep pace with the growth of cities, several of which have already outgrown the existing carriers' bounds. I therefore recommend that Congress fix the pay of carriers by law, or make sufficient appropriations to enable the Postmaster-General to compensate them fairly and make such extensions as the growth of cities and their business interests demand.

A tabular statement, exhibiting in detail the operations of the free-delivery service for the past fiscal year, will be found on pages 2–5 of the appendix.

POSTAL MONEY-ORDER SYSTEM.

The number of domestic money-order offices in operation at the commencement of the last fiscal year was 3,697. On account of the insufficiency of the appropriation for clerks in the office of the Auditor of the Treasury for the Post Office Department, no new domestic offices were established, with the exception of three at stations of the post-office at San Francisco, Cal., while fourteen were discontinued, leaving 3,686 in operation June 30, 1877.

Since then, 458 new offices have been established, making the whole number of money-order offices 4,144 in operation at the date of this report.

The number of domestic money-orders issued during the year, was 4,925,931, amounting to $72,820,509.70, and the number paid was 4,769,673, amounting to $72,448,156.53. The domestic orders repaid

amounted in value to $460,318.72, which sum is to be added to the amount of the orders paid, making the total payments $72,908,475.25, and the excess of the payments over the issues $87,965.55.

Fees amounting to $623,748.95 were received by postmasters for the issue of domestic orders.

A decrease is shown by the foregoing statement of the year's transactions, when compared with that of the previous year, amounting to $4,215,463.08, or 5.48 per cent., in the orders issued; $4,184,414.92, or 5.46 per cent., in the orders paid; and $21,956.55, or 3.40 per cent., in the fees received.

The chief cause of this notable decrease in the amount of the money-order business during the last year, was the continued financial depression, which has seriously affected the business of the country, and diminished the number of remittances for various purposes. Among the working-classes especially the scarcity of money resulting from lack of employment has of necessity very much restricted the habitual use of the money-order system for the transmission of small sums by one member of a family to another, and for making small purchases.

Throughout the previous year the decrease in the business of the old offices was partially compensated for by the additional transactions, resulting from an increase of 296 in the number of offices. It is believed that if the usual number of new offices had been established at the commencement of the year, the diminution in the amount of business would have been considerably less.

The domestic money-orders issued during the year averaged $14.78, the average being 63 cents smaller than that of the previous year; and the average fee upon each order was 12.66 cents, being 0.26 cent less than the average of the previous year.

During the year 16,283 duplicate money-orders were issued, of which number 148 were afterwards cancelled, leaving 16,135 as the number actually used; of these 15,132 were issued in lieu of orders lost in the mails, or which, by reason of imperfect address or change of residence, or from some unknown cause, had failed to reach the payee; 475 were in lieu of orders alleged to have been lost while in the possession of the remitters, payees, or indorsees; 30 were issued to remitters in lieu of orders, payment of which had been prohibited in pursuance of the provisions of section 3,929 of the Revised Statutes of the United States, because drawn in favor of the proprietors or agents of fraudulent lotteries, gift enterprises, or other "schemes or devices for obtaining money through the mails by means of false or fraudulent pretenses, representations, or promises;" 238 were in lieu of orders which had become invalid because not presented for payment within one year after the date of their issue; 175 in lieu of orders supposed to have been burned in the mails, and 85 in lieu of orders mutilated while in the hands of remitters, payees, or indorsees.

The following statement showing the revenue which accrued on

domestic money-order transactions during the fiscal year ended June 30, 1877, has been reported by the Auditor:

Fees received on domestic money-orders issued		$623,748 95
Premiums, &c		660 71
Total		624,409 66
Commissions and clerk-hire	$434,576 32	
Incidental expenses	22,963 70	
Lost remittances	4,523 00	
Bad debts	62,415 45	
Net revenue	99,931 19	
		624,409 66

To the amount of net revenue should be added an amount not less than $8,500, being the estimated net proceeds of the money-order business with foreign countries during the last year, not yet ascertained by the Auditor.

The amount of revenue from the domestic business is $90,839.65 below that of the previous year, being a falling off of nearly 48 per cent.

In the item of "bad debts" is included the sum of $53,632.87, a loss occasioned by a compromise, made December 29, 1876, with the sureties of James Kelley and Patrick H. Jones, late postmasters at New York, N. Y., in the matter of the defalcation, in 1871, of John W. Norton, a money-order clerk in the New York office, being a portion of $115,428.71, money-order funds, embezzled by said Norton, $35,000 prior to May 1, 1869, during the administration of James Kelley, and $80,428.71 under that of Patrick H. Jones.

Had it been possible to debit the amount of this loss at the time when and to the years in which it occurred, the amount of net revenue for the past fiscal year, when added to the estimated revenue of the foreign business, would have been $162,064.06.

Out of general appropriations the following items of expense were paid, which are fairly chargeable to the money-order system, viz:

Salaries of superintendent's office	$34,099 15
Salaries in the Auditor's office	103,240 00
Books, blanks, and printing furnished by the Public Printer for the money-order system	33,101 62
Books, blanks, and stationery not included in the last item, estimated at	4,500 00
Being a total of	174,940 77

This amount is greater by $66,509.56 than the net revenue of the domestic and foreign business, and $12,876.71 greater than would have been the net revenue had there been no losses of previous years charged to the account of the last year.

Allowances for clerk-hire, amounting to $168,238, were paid during the last year at post-offices where the amount of commissions on money-order business, when added to the salary of the postmaster, exceeded $4,000 per annum.

A number of the larger post-offices are denominated "money-order

offices of the first class," or depositories for surplus funds which accumulate at offices which issue money-orders to an amount greater than they pay. When it is impossible for postmasters to procure drafts of national banks or of United States disbursing-officers, whereby to make the remittances of their surplus funds to the designated first-class office for deposit, they are instructed to make such remittances in registered letters by mail.

A total of $51,893,329.58 of such remittances was received on deposit during the year by postmasters at money-order offices of the first class, exclusive of the amount of postmasters' drafts paid by the postmaster at New York, and of the sums advanced to postmasters in the Pacific States by the postmasters at San Francisco, Cal., and Portland, Oreg.

During the year sixty-eight cases of such remittances, amounting to $16,380.80, reported as lost, were under investigation. Twenty-four of these, amounting to $4,963, as stated in the last year's annual report, were pending at the close of the previous fiscal year; six, amounting to $1,551, alleged to have occurred during that year, were not brought to the knowledge of the department until after the publication of the last annual report; two, amounting to $241, reported in previous years as recovered, were reopened, and thirty-six cases, amounting to $9,625, occurred within the year. In twenty-one of these cases the amount, $4,476, was allowed to the postmasters by whom the remittances were made; in another case $129, being 64.5 per cent. of the amount lost, and in another, $0.80, being 0.2 per cent. of the amount lost, was so allowed. In twenty-five cases the amount, $6,380, was recovered by special agents of this department; in another case, $430, being 99.8 per cent. of the amount lost, and in another, $71, being 35.5 per cent. of the amount lost, was so recovered, and twenty cases, amounting to $4,894, remained unsettled at the close of the year.

Certain postmasters east of the Rocky Mountains, whose receipts from the sale of orders occasionally or habitually fell short of the sums required by them to pay orders when presented, were allowed credits with the postmaster at New York to a definite amount in each case. To such postmasters a limited supply of blank drafts was furnished to be drawn against their credits from time to time, as the exigencies of the business might demand. The postmaster at New York has paid drafts of this class amounting to $6,491,541.53 during the last fiscal year.

In the Pacific States and Territories postmasters have been furnished by the postmaster at San Francisco, Cal., with funds amounting to $71,729, and by the postmaster at Portland, Oreg., with $34,206, to meet like requirements in that section.

Money-order offices which require funds to meet the deficiency, caused either habitually or occasionally by an excess of disbursements over receipts, are authorized to make transfers from their postage account to their money-order account to meet such deficiency. On the other hand, at certain post-offices, where large sums are required to meet payments

of mail-contractors and other creditors, the transfer of funds from money-order to postage account is specially authorized by the department.

During the last year the sum of $537,885.39 has been transferred from the money-order to the postage account, and $536,276.80 from the postage to the money-order account, leaving a balance of $1,608.59 due the latter account.

In seventy cases, amounting to $1,959.18, out of the total number of domestic orders paid during the year, it was alleged that the payments were made to persons fraudulently representing themselves to be the payees or their indorsees or agents, and who were enabled to obtain payment by forging the signature of such payees or indorsees or by other irregular or unlawful means, being at the rate of one erroneous payment in 68,138.

One hundred and fourteen claims for reimbursement, growing out of such alleged erroneous payments, amounting to $3,270.05, were under investigation during the year, thirty-two of which, amounting to $992.66, were cases which remained unsettled at the close of the previous fiscal year; twelve, amounting to $318.21, occurred during the previous fiscal year, but were not brought to the notice of the department until after its close; and seventy, amounting to $1,959.18, as above stated, occurred during the year.

In three of these cases the amount, $60.04, was ascertained to have been paid to the rightful claimant; in three cases the amount, $97, was charged against the remitters, and in another case $5, being 5 per cent. of the amount alleged to have been erroneously paid, was so charged; in four cases the amount, $125, was charged against the payees; in thirty-three cases the amount, $843.89, was collected from the paying postmaster, or, through him, from the clerk in his office to whom the error was chargeable; in another case $29.80, being 20.9 per cent. of the amount erroneously paid, and in another $5, being 50 per cent. of such amount, was so collected; in one case, $0.19, being 1 per cent. of the amount erroneously paid, the loss was assumed by the department; in twelve cases the amount, $202.97, was recovered by special agents of this department; in another case, $19.81, being 99 per cent. of the loss, and in another, $113.08, being 79.1 per cent. of the loss, was so recovered; and fifty-six cases, amounting to $1,768.27, remained unsettled at the close of the year.

On the 30th day of June, 1876, there were 179 money-order offices in the United States authorized to issue money-orders payable in Switzerland, and to pay orders drawn in that country. During the year three of these offices were discontinued, leaving 176 in operation at its close. The number of orders issued in the United States, payable in Switzerland, was 3,802, amounting to $79,625.33, and the number of Swiss orders paid in the United States was 1,725, amounting to $40,424.95. The amount of Swiss orders issued in the United States and afterward repaid was $593.18. The fees received for orders issued amounted to $2,296.25.

A comparison of this business with that of the previous year shows a decrease of $3,631.29, or 4.36 per cent., in the amount of orders issued, an increase of $2,030.66, or 5.29 per cent., in the amount of orders paid, and a decrease of $51, or 0.22 per cent., in the amount of fees received.

On the 30th day of June, 1876, the number of money-order offices in the United States authorized to issue orders payable in the United Kingdom of Great Britain and Ireland, and to pay orders drawn in that country, was 1,013. During the year 10 of these offices were discontinued, leaving 1,003 in operation at its close. The number of orders issued in the United States payable in Great Britain was 51,797, amounting to $805,338.63, and the number of British orders paid in the United States was 22,844, amounting to $392,766.19. The amount of British orders issued in the United States and afterward repaid was $2,588.74. The amount of the fees received for orders issued was $25,656.75.

A comparison of this business with that of the previous year shows a decrease of $213,016.52, or 20.92 per cent., in the amount of orders issued; an increase of $20,477.56, or 5.50 per cent., in the amount of orders paid, and a decrease of $5,599.35, or 17.91 per cent., in the amount of fees received.

June 30, 1876, the number of money-order offices in the United States authorized to issue orders payable in the German Empire, and to pay orders drawn in that country, was 631. During the year 3 of these offices were discontinued, leaving 628 in operation at its close. The number of orders issued in the United States, payable in Germany, was 38,455, amounting to $731,873.80, and the number of German orders paid in the United States was 29,889, amounting to $703,836.36. The amount of German orders issued in the United States and afterwards repaid was $2,602.09. The amount of fees received for orders issuedwas $20,135.80.

A comparison of this business with that of the previous year shows a decrease of $48,186.72, or 6.18 per cent., in the amount of orders issued; $25,836.30, or 3.54 per cent., in the amount of orders paid; and of $1,312.30, or 6.12 per cent., in the amount of fees received.

The number of money-order offices in the United States on the 30th day of June, 1876, authorized to issue orders payable in the Dominion of Canada, and to pay orders drawn in that country, was 316. During the year 37 offices were added to this number and 1 was discontinued, leaving 352 in operation at its close. The number of orders issued in the United States, payable in the Dominion, was 10,768, amounting to $227,216.22, and the number of Canadian orders paid in the United States was 16,231, amounting to $297,838. The amount of Canadian orders issued in the United States and afterward repaid was $1,167.84. The amount of fees received for orders issued was $5,233.60.

A comparison of this business with that of the previous year shows an increase of $40,220.48, or 21.51 per cent., in the amount of orders issued; of $65,212.43, or 28.03 per cent., in the amount of orders paid; and of $948.75, or 22.14 per cent., in the amount of fees received.

A postal convention for the exchange of money-orders between the United States and the kingdom of Italy, a copy of which is hereto annexed, was concluded at Washington on the 31st day of March, 1877. In pursuance of the provisions of this convention the exchange of orders with that country commenced July 2, 1877.

The gross number of domestic and international money-orders issued during the year was 5,030,747, amounting to $74,664,563.68, and the gross number paid was 4,840,362, amounting to $73,883,022.03.

Previously to 1876 no part of the net proceeds of the money-order business with foreign countries had been paid over for the service of the Post Office Department. During the last fiscal year the aggregate net proceeds of that business for all years prior to and including the fiscal year ended June 30, 1875, as reported by the Auditor, were $63,261.84, which amount was deposited on the 31st day of October, 1876, with the assistant treasurer of the United States at New York, to the credit of the United States for that service.

A final adjustment of the accounts of the last quarter of the fiscal year ended June 30, 1877, to be made by the Auditor and the proper accounting-officers of the foreign countries with which money-order conventions are in force, has not been reached. He is, therefore, unable at present to furnish an exact statement of the revenue of that year derived from the exchange of money-orders with those countries.

The revenue of the previous year derived from the British business is reported by the Auditor at $542.44; that from the German, at $8,588.30; and from the Canadian, at $194.52. In the transaction of the Swiss business a net loss of $108.44 was sustained, which, when deducted from the aggregate revenue from the British, German, and Canadian business, leaves a balance of net revenue derived from the exchange of money-orders with foreign countries during that year, amounting to $9,216.82.

The sum of $172,409.85, being the aggregate net proceeds of the money-order business of the United States, as reported by the Auditor, has been deposited during the last fiscal year with the Treasury Department to the credit of the United States for the service of the Post Office Department. Of this amount, $99,931.19 represented the net proceeds of the domestic money-order business for the last fiscal year; $9,216.82 the net proceeds of the money-order business with foreign countries for the previous year; and $63,261.84, as before stated, the net proceeds of the business with foreign countries from the establishment of the system to the close of the year ended June 30, 1875.

MISCELLANEOUS.

I desire especially to call attention to a matter which has been earnestly dwelt upon by my two immediate predecessors, and to insist, as they did, upon the urgent necessity for a change in the method of adjusting the salaries of postmasters at fourth-class offices. In this

class are embraced all offices to which appointment is not Presidential, or more than 96 per cent. of the whole number, so that it must be evident that any evil and mischievous influences affecting the management of fourth-class offices must be potent and far-reaching in their effects. Under existing law, postmasters in charge of this class of offices derive their salaries almost entirely from a very large percentage on their sales of postage-stamps, while the salaries of Presidential offices having once been adjusted according to law, remain unchanged until a new adjustment is ordered. Postmasters of the first three classes appointed by the President, receiving fixed salaries of from one thousand to four thousand dollars, (except the postmaster at New York, whose salary is eight thousand dollars,) must account for all stamps sold by them at their face value, and their salaries would not be increased by the sale of an immense number of stamps nor diminished by the failure to sell any. Whether the sales of stamps at Presidential offices amount to ten thousand or one hundred dollars, the government receives the entire amount.

But with offices of the fourth class the opposite is the case. A postmaster at a fourth-class office receives 60 per cent. of the amount of stamps sold by him in each quarter, up to one hundred dollars; on all over one hundred and not over three hundred dollars per quarter, 50 per cent., and on all over three hundred dollars per quarter, 40 per cent., until the amount reaches one thousand dollars or over, when the office becomes Presidential and has a fixed salary under the method of adjustment prescribed by law. If a postmaster of the fourth class sells quarterly one hundred dollars' worth of stamps, or four hundred dollars annually, he receives of the proceeds two hundred and forty dollars, and the government one hundred and sixty dollars. If he sells three hundred dollars' worth quarterly, or twelve hundred dollars' worth a year, the postmaster would receive six hundred and forty dollars, and the government five hundred and sixty dollars. He may go further, and, in addition to the amount stated, may sell annually stamps to the value of eight hundred and ninety-five dollars, of which his share will be three hundred and fifty-eight dollars, and that of the government five hundred and thirty-seven dollars. That is, under existing law, twenty-five out of every twenty-six postmasters may sell annually, in quarterly installments, postage-stamps to the amount of two thousand and ninety-five dollars, of which each will receive nine hundred and ninety-eight dollars, and the government one thousand and ninety-seven dollars, while in only one office out of every twenty-six do the entire proceeds from the sales of stamps accrue to the benefit of the government.

It thus plainly appears that the law now in force has created a direct antagonism between the interest of the government and that of 96 per cent. of the postmasters. The postmasters of the fourth class are interested in selling as many stamps as possible, but the larger their sales

become, the smaller in proportion are the revenues of the department; and, on the contrary, the greater the sales by Presidential offices, the greater the revenues of the department, for the country can only use a certain amount of stamps, and an increase of sales at fourth-class offices necessarily causes a decrease of the receipts from Presidential offices.

When the government thus offers a premium to its officers for defrauding its revenues, it is not surprising that the temptation to speculations at its expense proves, in many cases, too strong to be resisted. Many postmasters are retail merchants, and are accustomed to pay in part or wholly for goods with postage-stamps. Complaints are frequently made to the department by postmasters of cities that they sell no stamps to wholesale merchants, and the merchants in many instances have frankly admitted that they obtained their stamps from their country retail customers. This, however, is but a single instance of the proportions to which the speculative trade in stamps has grown. The excellent opportunities afforded by this law have not escaped the attention of that class of persons who are always ready to turn an honest penny at the expense of the government, and they have spared no efforts to demoralize those postmasters who were not disposed to take that advantage of the government which the law allows.

Sewing-machine agents, dealers in bogus jewelry, and in musical instruments, books, periodicals, &c., have tempted postmasters with printed circulars, urging them to buy their goods, and pay for them in stamps. These circulars estimate the cost in cash to the postmaster of the goods advertised, when paid for in stamps at par, so that he cannot fail to see the profit to himself; and, to quiet any scruples of conscience, recite that "able attorneys have been consulted who state" (and, I must admit, with truth) "that no law is violated by the postmaster in making such trades; that the only thing in his way is an order of the Postmaster-General declaring it cause for removal from office, of which there is little danger, as the postmaster and the party sending the circular can deal confidentially."

A large amount of valuable information concerning the manner in which the revenues of the Department are defrauded through these schemes will be found in the accompanying report of the Third Assistant Postmaster-General, to which especial attention is invited.

The consequence is, and must continue to be so long as the law remains unchanged, that the sales from these offices increase far beyond the legitimate wants of the people served by them, and they supply to a large extent our cities, while the sales from the city offices correspondingly diminish, and the net revenues of the department are thereby reduced.

That this evil needs correction can hardly be denied. The remedy is not so apparent. The business of a post-office is best indicated by the number and value of the stamps cancelled at it, and the best method, in my opinion, of correcting the mischief to which attention has been called,

s to make the value of the stamps cancelled at the office the basis of compensation to postmasters in all cases in which the sale of stamps is at present the basis. It is true that this plan has its objections and was abandoned for the present system, but experience has demonstrated that the original method is better than the present. I do not see how any basis of compensation can be devised which will not be subject to abuse. Something must be left to the fidelity and diligence of the postmaster. All that can be done is to provide the best means possible of detecting him should he prove careless or dishonest. The amount of stamps cancelled at an office would afford a pretty fair test of the demand for them in the neighborhood, and of the legitimate sales therein; and should the postmaster be required to state under oath that his report of the cancellation of stamps at his office is accurate, it will be far more likely to give a true statement of the legitimate business of the office than the present system, which furnishes nothing in the nature of a check, save the number and value of the stamps received for sale, which the postmaster may sell everywhere and for anything, and the more of them he sells, the larger his compensation.

If Congress should decline to change the present basis of compensation, there ought, at least, to be some security provided against the perpetuation of the great abuses which have grown up, by providing penalties against both buyer and seller in cases of trading and speculating in stamps; and it might be required of postmasters to make report under oath of the stamps sold, and that none had been sold in trade or on speculation, or for anything but money at their face value.

Section 3843 of the Revised Statutes of the United States requires postmasters to render quarterly reports of the moneys received by them on account of the revenues of their offices. The requirement of quarterly reports was originally made when post-offices were more widely separated, when the means of intercourse and communication were slower than now, and when the business of the department was insignificant in comparison with its present proportions. It would be more in accordance with the present method of transacting business, and would enable the department to form a better judgment as to the solvency of postmasters and the accuracy of their accounts, if these reports were made monthly, at least from the principal offices. Defalcations, failures, and the insolvency of sureties would be more readily ascertained, the losses by reason thereof would be greatly decreased, and promptness in collecting and disbursing the revenues of the department would be correspondingly increased. The change would involve very little additional expense—none, in fact, except that attending a small addition to the clerical force in the Sixth Auditor's office—while the amount saved would be considerable, and collections would be attended with less embarrassment, difficulty, and expense. I recommend, therefore, that section 3843 of the Revised Statutes be so amended as to require all postmasters who are appointed by the President to

make their reports monthly instead of quarterly, leaving the smaller offices to be reported from as under existing law. This would require monthly reports from but a small proportion of the offices, but would embrace all the great commercial and business centers from which most of the postal revenues are derived.

I think it may be taken as settled by Congress that regular, legitimate, printed periodicals, issued at stated intervals from a known office of publication, shall pass through the mails at privileged rates of postage; that is, at less than the cost of their transportation. I think it may also be taken as settled that other printed publications shall pay a higher rate of postage, and I do not recommend any change of either of these rates. The great difficulty is to determine what periodicals are entitled to privileged rates and what are not. The boundary-line between them is by no means distinct nor easily ascertained, and the department is overwhelmed with questions and controversies in regard to it. The fifteenth section of the act of Congress approved July 12, 1876, provides that "transient newspapers and magazines, regular publications, designed primarily for advertising purposes, * * * * * * shall be admitted to and transmitted in the mails at the rate of one cent for every two ounces or fractional part thereof." "Regular publications, designed primarily for advertising purposes," assume the shape of regular periodicals as completely as may be, so as to avoid the higher rate of postage, if possible, and obtain the advantage of the regular newspaper pound-rates. It is important to escape these difficulties as well as may be, and hence I have requested Mr. A. H. Bissell, who has for some time been connected with the office of the Assistant Attorney-General for this department, and has had much to do with these questions, to investigate and report the best method of carrying out the expressed will of Congress in respect to this matter. He has done so ably and faithfully. I transmit herewith his report, and indorse his recommendations. As will be seen, he has conferred with some of our ablest and most experienced postmasters, who have been almost constantly required to deal with questions arising under this law, and they approve his plan for perfecting the law. His plan is to include publications of all kinds, transient as well as regular, issued from an office of publication, or sent by individuals, in the second class of mail-matter, and to have one rate for matter registered for transmission through the mails, and another rate for transient and miscellaneous matter. A repeal of section 15 of the act of July 12, 1876, relative to classification of printed matter and the rates of postage thereon, and the enactment of a statute classing together printed publications of all kinds, whether regular or transient and miscellaneous, the rate for the former to be uniform at two cents per pound, when registered for transmission through the mails; and for the latter, one cent for every two ounces or fraction thereof, as recommended by Mr. Bissell, will, in my opinion, go very far toward obviating existing

difficulties, and better secure the collection of the postal revenues to which the government is entitled on printed publications.

The law in regard to the manufacture, distribution, and use of official envelopes and postage-stamps is involved in much obscurity, and leads to unnecessary confusion and complication. I would recommend that the use of official postage-stamps be abolished, and that official envelopes be used in all cases in their stead.

Discontent and suspicion have been aroused in many instances and in various localities in respect to the lettings of contracts for carrying the mails, because companies organized for the purpose have underbid local contractors, obtained the contracts, and, by reason of their advantage, have then sublet them to the local contractors, who had stock and material for their execution, which would become useless and a source of loss if the routes upon which they had carried the mails passed into other hands. Hence these companies organized for speculation only, and never intending to do the work required by their contracts, have, in many instances, driven hard bargains with the previous contractors, and afterward defrauded them of their pay. By law the department is required to accept the offer of the lowest bidder who complies with its terms, and has no power to reject a lower bid, conforming to law, for a higher one, so that these hardships have been unavoidable. Nor can I see that any change of the law in this respect would be advisable or just to the government. The government is interested in obtaining the lowest terms for the work, and in promoting competition, instead of discouraging it. Under the law the department, in such cases, must deal with the party to whom the contract has been awarded, must make payments for the service to him, and can take no notice of and make no payments to the subcontractor. It has sometimes happened that a subcontractor has gone forward and faithfully rendered the service his principal was bound to perform, and for which the principal received the pay, and yet the subcontractor received no pay from his principal because the latter had become insolvent, or was proof against legal process for the collection of debts. I would recommend that a law be enacted giving the subcontractor a lien for his pay on the compensation due the contractor, provided he file in the office of the Second Assistant Postmaster-General satisfactory evidence of his contract, together with its terms; and that in such case he may be paid by the department for the services rendered by him out of the funds which may be due or become due his principal under his contract in the particular case. I desire to call attention to the recommendations of the Second Assistant Postmaster-General in regard to this subject.

Congress at the last session incorporated in "An act making appropriations for sundry civil expenses of the Government for the fiscal year ending June 30, 1878, and for other purposes," approved March 3, 1877, the following clause:

"That the sum of three hundred and seventy-five thousand dollars, or so much thereof as may be necessary, be appropriated to pay the amount due mail-contractors for mail-service performed in the States of Alabama, Arkansas, Florida, Georgia, Kentucky, Louisiana, Mississippi, Missouri, North Carolina, South Carolina, Texas, Tennessee, Virginia, and West Virginia, in the years eighteen hundred and fifty-nine, eighteen hundred and sixty, and eighteen hundred and sixty-one, and before the said States engaged in war against the United States."

In regard to this appropriation the Secretary of the Treasury has decided that "no money be paid out of this appropriation until the whole of the claims are received and adjusted, and if the appropriation is insufficient they should then be paid *pro rata*."

Under the general law it is the duty of the Post Office Department to certify these claims to the Treasury Department for payment, after ascertaining their amount, but it will necessarily be a work of time to ascertain the entire amount of these claims. Another difficulty has arisen in these cases. Each of these contracts, under authority of law, contained a provision that the Postmaster-General might discontinue or curtail the service in whole or in part, whenever the public interests required it, he allowing one month's pay on the amount of service dispensed with. In view of the condition of affairs existing at the time, Congress enacted, February 28, 1861, "That whenever, in the opinion of the Postmaster-General, the postal service cannot be safely continued, or the post-office revenues collected, or the postal laws maintained on any post-route, by reason of any cause whatever, the Postmaster-General is hereby authorized to discontinue the postal service on such route, or any part thereof, and any post offices thereon, till the same can be safely restored." On May 27, 1861, the Postmaster-General issued an order suspending the service after May 31, 1861, on the routes embraced in the States above enumerated, under the act of February 28, 1861. Under the authority of the decision of the Supreme Court of the United States, in the case of Reeside *vs.* United States, (8th Wallace's Reports, 38–44,) it is a very grave question whether the contractors provided for by this appropriation are not entitled to one month's extra pay upon the discontinuance of their routes, if the amount due them is to be ascertained and certified under the general law, which would considerably increase the sum necessary to pay these claims in full. I refer to the condition of things under this appropriation that Congress may take such action in regard thereto as it may deem proper.

As required by an act passed at the last regular session of Congress, such investigations have been made as the force and means at command would permit, in regard to a reduction of the force and salaries of clerks, carriers, and other employés, and the general expenses of the post-offices, but so far without discovering how such reductions may be made without impairing the efficiency of the service. It may be that further

investigation may discover instances in which it may be done, for as yet a careful and complete inquiry has not been possible. The business of the department is annually increasing to meet the demands of a growing population and a rapidly developing country, and its expenses must necessarily correspondingly increase rather than diminish, but the ratio of expenses to the gross receipts will be gradually reduced until the Post Office Department will eventually prove a source of revenue to the government.

The railroads of the country constitute the main lines, the arteries, so to speak, of our postal system, and it is of the highest importance that our railway-mail service be as perfect in its organization and as reliable in its operation as possible. The relations between the railroad officers and the department have been and are now of a most friendly character. The managers of the railroads all over the country manifest a disposition to aid the government in the prompt, safe, speedy, and regular transmission of the mails, and very few controversies have arisen between the officers of the department and those of the railroads in regard to the postal service. Indeed, during the late unfortunate labor-strikes, and the disorders following them, the railroad companies therein involved made every reasonable effort to carry the mails during the disorderly period, and resumed the service promptly when the turbulence subsided; and those roads not disturbed immediately notified the department that they were ready to assist it by forwarding the delayed mails over their lines. It is hoped that these friendly relations will be continued, but it may be well to provide remedies against their disturbance. Should a dispute arise between any railroad company and the government in regard to carrying the mail, the company has it in its power to oppose or resist the demands of the government by refusing longer to carry the mails, leaving this department to make such other arrangements for their transportation as may be within its ability. It is easy to see that serious interruptions of the postal service and consequent embarrassments to the business of the country may result from such a condition of affairs. To prevent or provide against such evil consequences, I suggest that legislation would be advisable to compel the railroads to carry the mails on terms to be prescribed by law. It might be well to leave the matter of compensation to the discretion of the Postmaster-General within such narrowly circumscribed boundaries as may be prescribed by Congress. If this officer and the railroad companies should, for any cause, fail to agree as to the terms of the service, or the compensation therefor, let there be a commission, board of arbitration, or other tribunal established by law to which such disputes may be referred upon the application of the Postmaster-General or of the railroad authorities. It would not be in consonance with the spirit of free institutions and popular liberty for the government to require railroads to do certain work and to fix the price at which the work should

be done. To do so would deprive the railroad companies of any voice or discretion in the management of a part of their business. It appears to me that the interests of the public demand that railroads should be required to transport the mails with certainty, celerity, safety, and regularity, but that they should be allowed to have some voice in negotiations as to terms and in the settlement and adjustment of disputes growing out of the service.

The intimate postal relations recently established between the principal commercial nations have greatly increased their intercourse, promoted their trade, and improved their acquaintance with and knowledge of each other. Inasmuch as this country was one of the first to call for an international postal treaty, it behooves us, as a matter of national pride, to make our postal machinery and its management as nearly perfect as possible, and we ought in no particular to permit our postal service to be surpassed by that of any other nation. An intelligent inspection of the postal systems of Europe and an accurate knowledge of their details would be of great advantage to us in this respect. I therefore suggest that the Postmaster-General be authorized to detail from his department three able and experienced officers to go to Europe and examine the operation and details of the postal service of those governments which have the most complete and efficient postal systems. Persons familiar with our own postal operations would be best qualified for this duty; and to detail officers of the department would involve less expense to the government than the appointment of others, as only their necessary travelling and other expenses would need to be provided for in addition to their salaries. An appropriation of five thousand dollars would be sufficient for this purpose, and I believe would produce most satisfactory results. One of these officers might examine the departmental organization of the postal systems in these countries; another, the railway-mail service and its incidents; and the third, the methods of conducting post-offices, the distribution of the mails, the carrier system, and that part of their mail transportation which most nearly allies itself to our star and steamboat service.

When called to the head of this department, I found it in a high state of efficiency, with all its bureaus in excellent working order. No changes of consequence have been made in the *personnel* of the department. I found it composed of able, experienced, and faithful officers and employés, admirably qualified for the duties of their stations. Everything connected with the postal service testified to the ability, honesty, fidelity, and excellence characterizing the administration of our postal affairs by my predecessor and those associated with him.

An act of Congress, approved July 12, 1876, authorized the President "to appoint a commission of three skilled and competent persons, who shall examine into the subject of transportation of the mails by railroad companies, and report to Congress at the commencement of its next session such rules and regulations for such transportation and rates of compen-

sation therefor as shall, in their opinion, be just and expedient, and enable the department to fulfill the required and necessary service for the public." The President appointed three gentlemen, who entered earnestly upon the discharge of their duties and labored very industriously, but were not prepared to report satisfactorily to the next session of Congress after their appointment, and at that session they were granted time until the present session of Congress to report. This commission has labored diligently, and many of their recommendations will, no doubt, be of great value, and deserve consideration of the most favorable character.

In a communication to the Postmaster-General, which appears in the appendix to this report, Mr. Gardiner G. Hubbard, the chairman of this commission, reports a deficiency in the appropriation for its expenses.

I desire especially to invite attention to the necessity for an increased appropriation for the railway-mail service, the reasons for which are vigorously presented in the report of Mr. Vail, general superintendent of that service. An increase of force in that branch of the service will add much to its efficiency.

Congress, by act of February 17, 1865, authorized a contract for carrying the mails between San Francisco and Hong-Kong, for ten years, at the rate of five hundred thousand dollars per annum. According to the provisions of this act, the Postmaster-General, 16th October, 1866, made a contract with the Pacific Mail-Steamship Company for carrying said mails. The company, under the terms of the contract, were to receive "five hundred thousand dollars for the performance of twelve round trips per annum for a contract term of ten years, to begin on or before the first day of January, 1867, and on the day the first steamship of the line shall depart from the port of San Francisco with the mails for China." Five millions of dollars were appropriated for this service. It required a little more than two months to make one round trip. Ten years from the beginning of the contract expired December 31, 1876, but the trips, commenced on the 1st of November and the 1st of December, 1876, were not completed until after January 1, 1877. The company has never received any compensation for carrying the mails on these two round trips, and no money has at any time been specifically appropriated for that purpose. This matter is mentioned that the attention of Congress may be called to it for such action as, in its judgment, the law and equity of the contract may demand.

Section 853 of the Revised Statutes, under the title "printers' fees," prescribes as the rates to be paid for advertising, forty cents per folio of one hundred words for the first insertion, and twenty cents for each subsequent insertion. Under an early construction of the law by a former Attorney-General it was held that this section applied only to advertisements ordered by the United States courts, and this department has been accustomed to contract with publishers of newspapers for its annual advertisements at their regular commercial rates. After the

contracts had been made for advertising the miscellaneous mail-lettings of April 10, 1877, on the usual basis, the Attorney-General decided that the rates prescribed in section 853 must govern all government advertising, and the Auditor of the Treasury for the Post Office Department was thereby compelled to annul the contracts with the publishers. The matter is submitted for such action as Congress may see fit to take in the premises. If the law remains unchanged, the department will be unable to procure the insertion of its advertisements in most of the leading newspapers of the country; and in some States it will be impossible to make other than temporary contracts for carrying the mails, on account of the inability of the Postmaster-General to comply with the law requiring the advertisements of the mail-lettings to be published in one paper at the capital of the State in which the mail-routes are located, by reason of the refusal of publishers to insert the advertisements at the rates allowed by law.

As will be seen by reference to the statement of the financial condition of the department, the revenues of this department have fallen off to the extent of $427,585.25 during the last fiscal year, as compared with those of the previous year. This is not the result of a diminished business. It arises, I apprehend, mainly from two causes: The large sales of postage-stamps made by the postmasters of small offices have supplied the market to such an extent that postage-stamps have accumulated in the hands of wholesale merchants and other business men, who have ceased to purchase stamps for their correspondence from their city offices; and many stamps purchased and on hand before the last fiscal year began have been used during that year. The deficiency arises, chiefly, from the diminished sales of stamps at Presidential offices. Another thing which has, no doubt, decreased the revenues of the department is the substitution of postal cards for letters. The number of letters and postal cards collected by carriers in cities having a free delivery gives conclusive evidence that such is the case. The letters collected in these cities in 1876 amounted to 200,280,079, and in 1877 they numbered 197,375,847; nearly three millions less than in the preceding year. In 1876, there were 33,950,503 postal cards collected in the same cities, and in 1877, 40,237,597; an increase of six and a quarter millions. So that, although there were more messages mailed in those cities, there were fewer letters in the last than in the previous year. No doubt the same causes had a corresponding influence and produced like results at the other offices.

The tendency of legislation affecting this department has been to cheapen the rates of postage to a point below the cost of transportation. While the business of the department has been thereby enlarged, its expenses have been correspondingly increased, and the result is that the greater the business the greater the deficiency which Congress is called upon to meet by appropriations from the Treasury. Postal matter of the first class, including letters and postal cards, pays, and more

than pays, its way through the mails; but matter of the second and third classes fails, by a large amount, to pay the cost of its transmission; while the large quantity of official and Congressional mail matter, which, under recent legislation, goes free, costs the government for its transportation just as much as other matter. Under existing postal laws, deficiencies in this department must, for a long time to come, increase as business increases, and it is best that this fact be clearly understood.

Very respectfully, your obedient servant,

D. M. KEY,
Postmaster-General.

THE PRESIDENT.

APPENDIX.

Statement of the operations of the free-delivery

Post-offices.	Number of carriers in service June 30, 1877.	Delivered.					
		Mail.		Local.		Registered letters.	Newspapers.
		Letters.	Postal cards.	Letters.	Postal cards.		
Albany, N. Y	25	2, 384, 909	272, 383	267, 530	210, 219	3, 321	1, 043, 450
Allegheny, Pa	11	1, 009, 092	100, 187	108, 487	47, 805	3, 265	704, 175
Atlanta, Ga	6	725, 017	149, 891	48, 231	61, 076	10, 112	375, 884
Baltimore, Md	62	5, 427, 291	648, 884	1, 082, 913	725, 217	22, 839	1, 933, 188
Bangor, Me	4	278, 515	52, 276	18, 326	6, 209	2, 750	155, 266
Boston, Mass	154	9, 750, 018	1, 871, 620	4, 346, 491	1, 720, 516	37, 650	4, 730, 248
Bloomington, Ill	6	378, 757	106, 983	31, 672	16, 368	2, 777	276, 478
Brooklyn, N. Y	89	4, 756, 533	906, 329	1, 148, 725	771, 990	19, 985	2, 767, 126
Buffalo, N. Y	34	3, 384, 683	367, 907	417, 873	277, 414	30, 106	2, 014, 500
Burlington, Iowa	6	615, 353	111, 886	37, 405	29, 696	3, 631	465, 790
Camden, N. J	6	615, 728	98, 041	55, 636	33, 226	1, 538	288, 888
Charleston, S. C	8	410, 694	68, 873	49, 508	34, 032	2, 856	232, 781
Chicago, Ill	157	16, 961, 036	2, 649, 086	2, 919, 719	1, 601, 729	157, 845	5, 041, 014
Cincinnati, Ohio	71	6, 765, 221	817, 760	1, 261, 408	710, 023	26, 649	1, 993, 389
Cleveland, Ohio	32	3, 538, 297	765, 067	479, 151	263, 912	36, 281	1, 802, 818
Columbus, Ohio	12	832, 633	178, 849	76, 920	52, 447	4, 014	547, 007
Covington, Ky	4	255, 644	38, 344	17, 088	10, 945	710	147, 340
Davenport, Iowa	7	462, 621	94, 399	31, 323	22, 906	2, 617	311, 171
Dayton, Ohio	12	1, 041, 893	199, 424	109, 650	71, 524	9, 211	660, 287
Des Moines, Iowa	6	517, 050	126, 134	55, 416	34, 623	3, 761	323, 629
Detroit, Mich	31	3, 895, 722	753, 473	484, 760	174, 079	32, 749	2, 077, 403
Dubuque, Iowa	5	448, 962	96, 411	23, 678	21, 455	4, 048	285, 472
Easton, Pa	6	792, 269	144, 603	43, 167	21, 069	1, 181	399, 223
Elizabeth, N. J	6	451, 305	73, 877	66, 988	30, 915	970	359, 601
Elmira, N. Y	6	664, 065	120, 063	46, 574	26, 058	4, 731	288, 526
Erie, Pa	7	572, 675	40, 881	55, 299	34, 846	840	427, 257
Evansville, Ind	7	521, 643	114, 415	28, 465	24, 481	3, 465	397, 612
Fall River, Mass	4	395, 507	30, 954	29, 074	15, 230	585	233, 855
Fort Wayne, Ind	7	818, 560	89, 872	98, 546	82, 654	3, 340	635, 638
Grand Rapids, Mich	8	858, 843	182, 273	99, 316	48, 858	6, 274	571, 297
Harrisburg, Pa	6	355, 554	75, 114	27, 372	20, 324	874	262, 228
Hartford, Conn	11	919, 735	175, 586	220, 120	124, 411	2, 515	712, 541
Hoboken, N. J	4	251, 002	52, 676	17, 236	24, 931	1, 321	102, 155
Indianapolis, Ind	28	2, 912, 755	421, 711	288, 378	186, 854	13, 074	1, 274, 052
Jersey City, N. J	14	1, 144, 385	116, 394	126, 956	79, 156	2, 780	418, 169
Kansas City, Mo	11	1, 502, 224	223, 695	113, 197	68, 340	16, 186	849, 836
La Fayette, Ind	5	312, 542	83, 995	28, 570	7, 363	1, 471	227, 496
Lancaster, Pa	5	523, 344	80, 188	22, 601	18, 325	1, 273	266, 802
Lawrence, Mass	8	642, 755	64, 283	45, 789	54, 550	953	391, 192
Leavenworth, Kans	5	316, 748	52, 298	12, 037	11, 982	1, 493	257, 389
Louisville, Ky	30	2, 731, 093	531, 472	309, 073	287, 658	19, 482	1, 156, 779
Lowell, Mass	10	652, 095	97, 102	66, 770	40, 455	1, 574	300, 764
Lynn, Mass	7	542, 209	108, 602	39, 094	50, 667	508	302, 199
Manchester, N. H	5	509, 595	94, 276	27, 541	29, 221	2, 308	438, 353
Memphis, Tenn	12	1, 366, 701	112, 032	81, 125	47, 510	11, 717	431, 800
Milwaukee, Wis	26	3, 137, 597	299, 592	297, 761	271, 552	18, 882	903, 152
Minneapolis, Minn	9	552, 133	72, 500	66, 530	42, 484	2, 826	545, 643
Mobile, Ala	6	259, 662	33, 654	24, 073	15, 212	1, 102	227, 022
Nashville, Tenn	10	1, 000, 270	182, 220	74, 400	51, 939	10, 712	628, 318
Newark, N. J	24	1, 862, 115	385, 575	388, 533	210, 361	9, 661	890, 212
New Bedford, Mass	7	693, 905	53, 768	49, 810	24, 941	989	385, 389
New Haven, Conn	14	831, 596	125, 611	103, 402	54, 172	1, 770	664, 718
New Orleans, La	47	1, 618, 591	164, 732	337, 648	223, 707	12, 098	891, 165
New York, N. Y	429	38, 286, 096	4, 725, 487	21, 367, 119	6, 663, 054	264, 689	9, 449, 136
Norfolk, Va	5	518, 437	93, 059	25, 078	21, 774	1, 079	201, 142
Omaha, Nebr	6	560, 467	91, 286	41, 842	29, 162	4, 022	349, 557
Oswego, N. Y	6	380, 121	70, 274	29, 032	17, 034	1, 186	191, 817
Paterson, N. J	7	437, 775	49, 022	45, 065	23, 349	1, 333	316, 394
Peoria, Ill	8	629, 339	133, 004	35, 315	26, 433	3, 543	337, 850
Petersburg, Va	5	366, 732	65, 211	13, 654	9, 861	2, 233	185, 489
Philadelphia, Pa	247	24, 860, 694	3, 729, 208	13, 761, 157	4, 533, 684	91, 433	13, 780, 186
Pittsburgh, Pa	34	2, 163, 170	277, 866	432, 217	191, 845	9, 623	1, 157, 007
Portland, Me	10	620, 042	126, 093	58, 210	63, 941	2, 167	574, 539
Pottsville, Pa	4	234, 042	49, 560	19, 156	6, 850	807	263, 613
Poughkeepsie, N. Y	6	595, 465	65, 155	51, 896	47, 135	1, 049	502, 159
Providence, R. I	20	1, 070, 773	182, 222	298, 706	89, 929	2, 764	626, 033
Quincy, Ill	7	483, 960	123, 494	33, 377	24, 867	3, 987	455, 682
Reading, Pa	8	662, 211	104, 602	53, 362	42, 663	1, 455	388, 704
Richmond, Va	16	1, 213, 378	228, 331	90, 227	75, 184	9, 691	533, 118
Rochester, N. Y	23	2, 255, 995	232, 513	190, 657	175, 641	17, 817	1, 011, 337
Saint Joseph, Mo	7	782, 179	132, 684	43, 436	24, 979	7, 537	566, 893
Saint Louis, Mo	107	9, 784, 494	1, 196, 878	1, 279, 664	926, 807	77, 479	4, 236, 863
Saint Paul, Minn	10	940, 870	156, 684	53, 253	44, 408	12, 170	595, 272

system for the year ended June 30, 1877.

Collected.			Pieces handled.		Cost of service, (including incidental expenses.)			Postage on local matter.
Letters.	Postal cards.	Newspapers.	Aggregate.	Per carrier.	Aggregate.	Per piece.	Per carrier.	
						Mills.		
1, 584, 327	272, 464	207, 638	6, 246, 241	250, 650	$19, 235 93	3. 07	$769 43	$8, 534 39
669, 769	86, 634	44, 465	2, 772, 879	252, 079	8, 376 56	3. 02	761 50	4, 770 70
506, 730	162, 992	41, 596	2, 081, 529	346, 921	4, 514 39	2. 16	752 39	2, 417 99
7, 357, 462	1, 242, 023	372, 290	18, 812, 107	303, 421	53, 408 61	2. 85	861 11	33, 081 58
332, 547	79, 118	23, 703	948, 710	237, 117	2, 710 02	2. 85	677 50	1, 042 43
13, 181, 176	3, 323, 052	1, 770, 553	40, 731, 324	264, 499	128, 393 72	3. 15	833 72	133, 843 22
217, 890	80, 773	38, 210	1, 149, 908	191, 651	4, 624 15	4. 02	770 65	1, 401 67
3, 677, 633	1, 117, 593	447, 569	15, 613, 485	175, 432	77, 051 37	4. 93	865 74	53, 738 18
2, 002, 910	504, 313	233, 024	9, 232, 730	271, 506	29, 262 79	3. 16	860 67	12, 603 66
504, 911	100, 392	142, 559	2, 011, 623	335, 270	4, 631 91	2. 32	771 81	1, 490 22
295, 866	68, 424	54, 631	1, 511, 978	251, 996	4, 478 92	2. 30	746 48	2, 285 19
331, 827	69, 446	54, 608	1, 254, 625	156, 823	5, 951 00	4. 74	743 87	2, 158 34
18, 780, 810	5, 134, 651	4, 526, 277	57, 771, 267	365, 332	133, 433 39	2. 30	849 89	81, 127 41
4, 467, 353	901, 534	393, 975	17, 337, 312	244, 188	62, 407 74	3. 59	878 98	45, 494 38
2, 609, 321	790, 682	308, 691	10, 594, 220	331, 070	29, 335 39	2. 77	916 73	17, 765 94
624, 686	182, 556	54, 031	2, 553, 143	212, 762	9, 503 24	3. 72	791 93	3, 761 90
114, 852	21, 836	10, 032	616, 831	154, 207	2, 826 64	4. 58	706 66	844 64
246, 172	81, 812	23, 204	1, 276, 225	182, 318	5, 361 82	4. 20	765 97	1, 414 00
769, 606	275, 567	358, 893	3, 496, 055	291, 338	9, 406 64	2. 69	792 22	3, 656 10
349, 262	87, 256	36, 343	1, 533, 474	255, 579	4, 919 65	3. 20	819 94	2, 198 49
1, 970, 039	425, 870	220, 133	10, 034, 228	323, 685	27, 402 40	2. 73	883 94	12, 089 12
447, 196	141, 200	52, 188	1, 520, 610	304, 122	3, 856 22	2. 53	771 24	1, 021 62
610, 941	131, 078	460, 918	2, 604, 449	434, 074	4, 840 55	1. 85	806 75	1, 315 04
229, 927	53, 480	26, 335	1, 283, 398	213, 899	4, 806 17	3. 74	801 02	1, 671 91
264, 616	70, 327	37, 475	1, 522, 415	253, 739	4, 728 97	3. 10	788 16	1, 803 61
288, 472	60, 022	27, 626	1, 507, 918	215, 416	5, 678 91	3. 76	811 27	2, 104 27
372, 787	108, 694	29, 113	1, 600, 675	228, 667	5, 393 43	3. 36	770 49	1, 063 00
155, 835	18, 841	26, 152	906, 034	226, 508	2, 504 52	2. 76	626 13	2, 055 35
769, 598	100, 397	84, 129	2, 682, 734	383, 210	5, 033 03	1. 87	719 00	4, 288 61
647, 798	156, 025	53, 812	2, 624, 496	328, 062	6, 086 13	2. 31	760 76	3, 928 41
137, 519	38, 774	10, 508	928, 267	154, 711	4, 329 24	4. 66	721 54	1, 502 68
652, 524	130, 146	89, 632	3, 027, 210	275, 200	8, 573 71	2. 83	779 42	6, 279 66
120, 094	37, 157	8, 810	615, 382	153, 845	3, 083 14	5. 01	770 78	737 08
1, 717, 784	477, 948	180, 049	7, 472, 605	266, 521	23, 110 94	3. 09	825 39	10, 762 03
537, 684	91, 636	50, 348	2, 567, 508	183, 393	10, 311 16	4. 01	731 51	3, 281 31
832, 315	233, 914	210, 363	4, 050, 060	368, 187	8, 809 46	2. 17	800 86	6, 958 35
214, 334	63, 013	18, 643	957, 427	191, 425	3, 621 63	3. 79	724 32	925 95
138, 347	33, 896	25, 477	1, 110, 253	222, 050	3, 632 02	3. 27	726 40	768 17
625, 983	78, 044	61, 429	1, 964, 978	245, 622	5, 869 89	2. 48	733 74	1, 688 99
261, 511	69, 155	33, 665	1, 016, 278	203, 255	3, 610 30	3. 55	722 06	728 36
1, 505, 048	429, 933	222, 544	7, 193, 082	249, 736	25, 591 70	3. 55	853 05	11, 942 74
651, 147	106, 593	49, 233	1, 965, 733	196, 573	7, 554 94	3. 84	755 49	4, 839 92
377, 858	106, 407	39, 746	1, 567, 290	223, 898	5, 561 38	3. 54	794 48	1, 791 86
259, 728	65, 719	53, 070	1, 479, 811	295, 962	3, 900 75	2. 63	780 15	1, 200 15
699, 432	123, 246	106, 354	2, 979, 917	248, 326	9, 377 41	3. 14	781 45	2, 174 89
1, 743, 917	403, 272	238, 760	7, 314, 485	281, 326	23, 683 87	3. 23	910 91	12, 933 86
457, 808	100, 119	53, 620	1, 893, 663	210, 407	7, 157 93	3. 79	795 43	3, 088 48
392, 278	80, 338	128, 721	1, 162, 062	193, 677	3, 943 33	3. 39	657 22	1, 853 99
543, 489	150, 125	84, 096	2, 725, 569	272, 556	7, 579 89	2. 78	757 98	2, 797 10
1, 051, 784	243, 550	128, 277	5, 170, 068	215, 419	20, 489 93	3. 96	853 74	10, 763 37
335, 076	57, 172	15, 783	1, 616, 833	230, 976	5, 352 54	3. 31	764 64	1, 940 86
711, 587	82, 960	69, 933	2, 645, 749	188, 982	10, 726 38	4. 05	766 17	10, 621 15
2, 179, 294	424, 582	708, 245	6, 560, 062	139, 575	37, 249 51	5. 67	792 52	11, 177 18
51, 836, 732	7, 229, 613	6, 298, 214	146, 120, 137	340, 606	347, 506 47	2. 37	810 03	1, 090, 052 65
585, 845	113, 478	41, 742	1, 601, 634	320, 326	3, 906 07	2. 42	781 21	1, 617 20
291, 562	95, 425	36, 558	1, 499, 881	249, 980	4, 703 28	3. 20	783 88	2, 506 82
265, 331	58, 926	26, 113	1, 039, 834	173, 305	4, 777 27	2. 49	796 21	849 48
232, 451	49, 478	32, 624	1, 187, 491	169, 641	5, 604 10	4. 97	800 58	1, 592 01
527, 830	160, 925	97, 902	1, 952, 141	244, 017	5, 984 67	3. 06	748 08	1, 602 84
254, 743	61, 068	24, 257	983, 248	196, 649	3, 594 28	3. 65	718 85	433 08
35, 420, 045	6, 947, 477	6, 357, 142	109, 481, 026	443, 243	227, 862 33	2. 08	922 51	360, 040 54
1, 765, 060	364, 062	29, 070	6, 589, 920	193, 809	28, 359 29	4. 30	834 09	19, 796 36
810, 969	197, 983	103, 398	2, 557, 342	255, 734	7, 591 29	2. 96	759 12	3, 887 65
132, 334	35, 866	64, 983	807, 211	201, 802	3, 027 72	3. 75	756 93	854 65
675, 061	120, 245	156, 593	2, 214, 758	369, 126	4, 003 17	1. 80	667 19	1, 853 38
587, 011	110, 813	32, 712	3, 001, 023	150, 051	16, 876 46	5. 62	843 82	13, 913 99
288, 206	94, 953	33, 156	1, 541, 682	220, 240	5, 564 89	3. 60	794 98	1, 428 27
351, 253	83, 835	26, 923	1, 715, 008	214, 376	6, 464 57	3. 32	808 07	1, 904 99
725, 963	185, 400	77, 859	3, 139, 151	196, 196	12, 196 07	3. 88	762 25	3, 771 94
1, 736, 390	204, 869	107, 630	5, 932, 849	257, 949	17, 273 55	2. 91	752 32	9, 580 10
516, 940	120, 502	101, 845	2, 296, 995	328, 142	5, 012 35	2. 18	716 05	1, 850 91
6, 918, 240	1, 789, 713	1, 983, 546	28, 093, 684	282, 557	93, 697 04	3. 33	875 67	40, 268 46
735, 670	177, 032	73, 264	2, 788, 623	278, 662	7, 537 90	2. 70	753 79	2, 804 83

Statement of the operations of the free-delivery

Post-offices.	Number of carriers in service June 30, 1877.	Delivered.					
		Mail.		Local.		Registered letters.	Newspapers.
		Letters.	Postal cards.	Letters.	Postal cards.		
Salem, Mass	6	357, 227	65, 344	37, 827	35, 597	10	295, 362
San Francisco, Cal	42	3, 710, 837	264, 391	1, 277, 808	665, 363	13, 069	1, 528, 521
Savannah, Ga	6	387, 652	84, 812	68, 637	18, 813	2, 444	215, 412
Springfield, Mass	8	761, 716	126, 823	94, 574	42, 514	1, 928	299, 182
Springfield, Ill	5	442, 895	101, 533	24, 364	16, 592	1, 623	311, 736
Syracuse, N. Y	17	1, 749, 303	280, 393	193, 797	137, 849	7, 046	915, 592
Toledo, Ohio	15	1, 413, 925	140, 475	123, 461	85, 952	6, 717	612, 807
Trenton, N. J	6	400, 294	70, 963	40, 223	24, 482	999	250, 326
Troy, N. Y	15	1, 620, 779	220, 822	222, 776	98, 373	3, 906	814, 535
Utica, N. Y	13	1, 038, 297	201, 990	121, 989	56, 386	5, 189	527, 945
Washington, D. C	37	2, 576, 989	275, 337	359, 939	151, 647	7, 490	1, 345, 994
Wheeling, W. Va	6	592, 518	136, 747	42, 064	32, 975	5, 708	317, 960
Wilmington, Del	10	619, 893	103, 977	75, 451	51, 644	1, 794	319, 207
Worcester, Mass	11	689, 140	121, 425	103, 755	80, 304	27	355, 618
Total aggregates and averages	2, 265	197, 375, 847	28, 965, 946	57, 017, 443	23, 654, 728	1, 149, 682	87, 848, 807

Compensation of special agents of the Post-Office Department paid out of appropriations for letter-

Total .....

system for the year ended June 30, 1877—Continued.

Collected.			Pieces handled.		Cost of service, (including incidental expenses.)			Postage on local matter.
Letters.	Postal cards.	Newspapers.	Aggregate.	Per carrier.	Aggregate.	Per piece.	Per carrier.	
						Mills.		
271, 997	57, 526	64, 420	1, 185, 310	197, 551	$4, 539 53	3. 83	$756 58	$1, 531 68
5, 529, 435	675, 462	714, 683	14, 379, 569	342, 370	43, 283 71	3. 01	1, 030 56	61, 321 34
394, 903	92, 188	54, 860	1, 319, 721	219, 953	4, 618 33	3. 49	769 72	2, 654 49
425, 286	90, 990	41, 079	1, 884, 092	235, 511	6, 237 63	3. 31	779 70	3, 365 83
234, 803	77, 005	67, 226	1, 277, 777	255, 555	3, 709 98	2. 90	741 99	1, 203 72
923, 162	261, 149	141, 492	4, 609, 783	271, 163	13, 173 11	2. 85	774 88	5, 730 84
1, 156, 235	243, 004	191, 974	3, 974, 550	264, 970	11, 893 02	2. 99	792 87	4, 567 17
310, 715	53, 517	23, 577	1, 175, 096	195, 849	4, 392 11	3. 73	732 01	2, 097 67
1, 351, 705	229, 573	312, 310	4, 934, 779	328, 985	11, 100 03	2. 24	740 02	5, 671 28
831, 677	196, 595	84, 147	3, 064, 215	235, 708	9, 883 17	3. 23	760 24	3, 956 53
1, 795, 809	271, 757	287, 936	7, 072, 898	191, 159	32, 314 79	4. 56	873 37	21, 422 07
515, 442	129, 364	51, 448	1, 824, 226	304, 057	4, 429 19	2. 42	738 19	1, 552 59
295, 927	79, 336	14, 352	1, 561, 581	156, 158	7, 329 37	4. 69	732 93	2, 621 73
442, 841	101, 717	44, 481	1, 939, 308	176, 300	8, 766 95	4. 52	796 99	5, 538 27
199, 566, 433	40, 237, 597	30, 746, 995	666, 563, 478	.....	1, 890, 497 95	.....	.....	2, 254, 597 83
carriers from July 1, 1876					3, 121 90			
.....					1, 893, 619 85			

Table showing the increase and decrease of post-offices in the several States and Territories; also the number of post-offices at which appointments are made by the President and by the Postmaster-General for the year ended June 30, 1877.

States and Territories.	Whole number of post-offices in the United States June 30, 1876.	Whole number of post-offices in the United States June 30, 1877.	Increase.	Decrease.	Number of postmasters appointed by the President June 30, 1876.	Number of postmasters appointed by the President June 30, 1877.	Increase.	Decrease.	Number of postmasters appointed by the Postmaster-General June 30, 1876.	Number of postmasters appointed by the Postmaster-General June 30, 1877.	Increase.	Decrease.
Alabama	796	856	60	...	17	12	...	5	779	844	65	..
Alaska	2	2	....	....	.....	.....	....	....	2	2	....	..
Arizona	39	42	3	....	3	2	....	1	36	40	4	..
Arkansas	636	668	32	....	9	6	....	3	627	662	35	..
California	763	771	8	....	35	41	6	....	728	730	2	..
Colorado	212	236	24	....	12	13	1	....	200	223	23	..
Connecticut	444	442	....	2	45	37	....	8	399	405	6	..
Dakota	148	175	27	....	2	1	....	1	146	174	28	..
Delaware	102	104	2	....	6	3	....	3	96	101	5	..
District of Columbia	6	6	....	....	2	2	....	....	4	4	....	..
Florida	222	240	18	...	6	7	1	....	216	233	17	..
Georgia	754	811	57	....	23	18	...	5	731	793	62	..
Idaho	74	73	....	1	3	2	....	1	71	71	....	..
Illinois	1,887	1,907	20	....	138	129	....	9	1,749	1,778	29	..
Indiana	1,523	1,542	19	....	68	58	....	10	1,455	1,484	29	..
Indian Territory	55	57	2	....	.....	.....	....	....	55	57	2	..
Iowa	1,370	1,402	32	....	84	89	5	....	1,286	1,313	27	..
Kansas	1,104	1,139	35	....	38	26	....	12	1,066	1,113	47	..
Kentucky	1,110	1,168	58	....	28	24	....	4	1,082	1,144	62	..
Louisiana	345	347	2	....	6	5	....	1	339	342	3	..
Maine	877	880	3	....	28	23	....	5	849	857	8	..
Maryland	619	621	2	....	14	9	....	5	605	612	7	..
Massachusetts	721	729	8	....	102	93	...	9	619	636	17	..
Michigan	1,225	1,251	26	....	70	63	....	7	1,155	1,188	33	..
Minnesota	832	849	17	...	23	23	...	....	809	826	17	..
Mississippi	576	576	...	...	21	15	...	6	555	561	6	..
Missouri	1,510	1,531	21	....	46	40	....	6	1,464	1,491	27	..
Montana	94	97	3	...	4	4	....	....	90	93	3	..
Nebraska	584	614	30	....	15	14	....	1	569	600	31	..
Nevada	92	98	6	....	9	10	1	....	83	88	5	..
New Hampshire	436	438	2	....	23	24	1	....	413	414	1	..
New Jersey	655	656	1	....	47	47	....	....	608	609	1	..
New Mexico	72	81	9	....	3	1	....	2	69	80	11	..
New York	2,835	2,839	4	...	182	154	....	28	2,653	2,685	32	..
North Carolina	1,134	1,175	41	....	13	10	....	3	1,121	1,165	44	..
Ohio	2,189	2,222	33	....	113	100	....	13	2,076	2,122	46	..
Oregon	291	305	14	....	6	5	....	1	285	300	15	..
Pennsylvania	3,155	3,203	48	....	131	113	....	18	3,024	3,090	66	..
Rhode Island	104	107	3	....	11	10	....	1	93	97	4	..
South Carolina	496	511	15	....	13	10	....	3	483	501	18	..
Tennessee	1,076	1,134	58	....	19	15	....	4	1,057	1,119	62	..
Texas	908	1,022	114	....	30	32	2	....	878	990	112	..
Utah	171	182	11	....	3	3	....	....	168	179	11	..
Vermont	488	489	1	....	21	18	....	3	467	471	4	..
Virginia	1,441	1,489	48	....	24	21	....	3	1,417	1,468	51	..
Washington	148	153	5	....	3	3	....	....	145	150	5	..
West Virginia	774	779	5	....	10	8	....	2	764	771	7	..
Wisconsin	1,244	1,275	31	....	56	51	....	5	1,188	1,224	36	..
Wyoming	44	51	7	....	3	3	....	....	41	48	7	..
Total	36,383	37,345	965	3	1,568	1,397	17	188	34,815	35,948	1,133	..

Total operations of the appointment-office for the year ended June 30, 1877.

States and Territories.	Post-offices.				Postmasters.			Total number of cases.
	Established.	Discontinued.	Names and sites changed.	Appointments on change of names and sites.	Resigned and commissions expired.	Removed.	Deceased.	
Alabama	79	19	7	2	108	20	9	242
Alaska	.....	.....	.....	.....	.....	.....	.....	.....
Arizona	9	6	1	1	9	.....	1	26
Arkansas	71	39	16	8	129	29	14	298
California	50	42	15	15	131	12	7	257
Colorado	37	13	9	9	70	5	1	135
Connecticut	1	3	.....	.....	23	4	6	37
Dakota	38	11	7	7	34	5	.....	95
Delaware	2	.....	.....	.....	6	2	1	11
District of Columbia	.....	.....	.....	.....	.....	.....	.....	.....
Florida	32	14	2	1	49	24	2	123
Georgia	74	17	3	3	95	7	10	206
Idaho	6	7	4	3	12	2	.....	31
Illinois	57	37	13	13	247	16	23	393
Indiana	38	19	5	5	249	29	23	363
Indian Territory	7	5	1	.....	10	6	1	30
Iowa	68	36	1	3	187	18	11	321
Kansas	73	38	38	29	221	26	10	406
Kentucky	85	27	5	5	204	26	13	360
Louisiana	20	18	3	3	60	23	10	134
Maine	5	2	1	1	65	8	10	91
Maryland	16	14	9	5	77	13	11	140
Massachusetts	8	.....	1	.....	36	6	5	56
Michigan	52	26	15	4	169	36	11	309
Minnesota	37	20	12	7	86	19	5	179
Mississippi	40	40	5	2	87	17	7	196
Missouri	64	43	15	4	228	41	19	410
Montana	10	7	1	.....	15	4	1	38
Nebraska	52	22	19	14	117	8	2	220
Nevada	13	7	1	.....	17	3	3	44
New Hampshire	4	2	1	1	27	5	4	43
New Jersey	5	4	6	4	48	7	9	79
New Mexico	13	4	2	2	26	2	2	49
New York	16	12	3	1	194	36	38	299
North Carolina	100	59	7	2	145	29	7	347
Ohio	49	16	5	1	234	42	17	363
Oregon	22	8	5	5	100	6	3	144
Pennsylvania	68	20	27	25	304	32	31	482
Rhode Island	3	.....	.....	.....	6	.....	2	11
South Carolina	42	27	4	4	56	9	12	150
Tennessee	79	21	8	3	170	34	13	325
Texas	172	58	16	9	216	18	11	491
Utah	18	7	.....	.....	23	9	2	59
Vermont	2	1	.....	.....	44	6	4	59
Virginia	103	55	14	6	184	28	9	393
Washington	8	3	2	1	40	5	1	59
West Virginia	26	21	3	1	113	18	6	187
Wisconsin	41	10	5	5	113	16	10	195
Wyoming	10	3	1	1	16	.....	.....	30
Total	1,825	863	318	215	4,800	711	397	8,914

POST-OFFICE DEPARTMENT,
OFFICE OF THE SECOND ASSISTANT POSTMASTER-GENERAL,
Washington, D. C., November 1, 1877.

SIR: At the close of the last fiscal year, June 30, 1877, the annual cost of inland transportation was as follows, viz:

On 958 railroad-routes, aggregating 74,546 miles in length	$9,053,936
On 98 steamboat-routes, aggregating 17,685 miles in length	666,989
On 8,178 other routes designated as "star routes," aggregating 200,589 miles in length	5,663,970
Total cost	15,384,895

Compared with the state of the service at the close of the preceding year, the railroad-routes show an increase of 46 routes in number, of 2,198 miles in aggregate length, while the cost has been decreased $489,198. This decrease is attributable to the operation of the act of July 12, 1876, reducing the compensation to all railroads for the transportation of the mails 10 per centum per annum on allowances for weight of mails, and the allowance of 80 per centum per annum after such reduction where the railroad was constructed in whole or in part by a land-grant made by Congress.

These reductions do not (under the decision of the Attorney-General) affect railroads carrying the mails under contract, except where endowed with a grant of land, nor allowances for railway post-office cars.

The steamboat-routes show an increase of 10 in number, of 2,802 miles in aggregate length, and of $60,524 in annual cost; and the "star routes" an increase of 175 in number, of 6,022 miles in aggregate length, and of $612,429 in annual cost. Taken together, the increase in the number of routes was 231, in the aggregate length 11,022 miles, and in the annual cost $183,755.

RAILROAD MAIL-SERVICE.

The cost of transportation on railroad-routes for the fiscal year ended June 30, 1876, was $9,543,134. The reduction for the last fiscal year under the act of July 12, 1876, as given in the report for 1876, was $986,901. A number of roads, however, to which the reduction of 20 per cent. was applied, were subsequently decided by the law-officer to be exempt from such abatement. The decrease of reduction from this cause is $51,374, making the reduction $935,527. The annual cost of transportation on railroad-routes for the fiscal year ended June 30, 1877, was $9,053,936, which is $489,198 less than the cost of the service on June 30, 1876, the reduction being caused by the act of July 12, 1876. The difference between the reduction of $935,527 resulting from the act of July 12, 1876, and the $489,198 actual decrease in the cost of service for the year ended June 30, 1877, as against the cost for 1876, shows the increase of cost attributable to the growth and extension of the service to be $446,392. This sum being an increase of 4.67 per centum for 1877 over 1876.

The increase of 4.67 per centum in the cost of 1877 over 1876 must, in view of the general prostration of all branches of trade, be regarded as a less rate of increase than will, with the expected revival of business, result from the development of the service in 1878 and 1879. Accepting 4.67 per centum, however, as the rate of increase for 1878 over the cost for 1877, the cost for 1878 would be $9,476,754, and this sum is used as the basis upon which to cast the estimate for 1879. Regarding 7 per centum as the probable rate of increase for 1879 over 1878, the

estimate for 1879 is fixed at $10,140,126, which is 9.62 per centum increase over the $9,250,000 appropriated for the current year.

In estimating the cost of service for 1878, the act of July 12, 1876, requiring abatements to be made in the rates allowable under the act of March 3, 1873, was regarded as temporary. If that act should be repealed an additional appropriation equal to the amount deducted would be required.

One of the requirements of contractors for the performance of "star" service is that the mails shall be taken from and delivered into every post-office on their routes. The gradual displacement of "star" service by the establishment of the railroad system entailed upon the latter this requirement as to the delivery of mails, with the exception that the railroad companies were not required to deliver mails to intermediate offices located over a quarter of a mile from depots or stations. The performance of this service has been the occasion of frequent remonstrance on the part of the railroad companies; and it is obvious that on many short routes on which the pay is small the cost of delivery to terminal and side offices is equal to, and in some instances perhaps greater than, the whole pay received from the Government for carrying the mails. It is believed that this service would be more satisfactorily rendered if the railroad companies were required to carry the mails between depots or stations only, and their delivery from those points provided for by the department; but to do this would require an appropriation estimated at $1,500,000 in addition to the $692,472 given as the probable cost of the mail-messenger service for 1879.

Since the commencement of the transportation of mails by railroad companies, it has been the custom of the department to require the company first engaging to carry the mails over a road to provide for the transportation of all mails necessary to be carried over the road or any part thereof. In carrying out this principle the Philadelphia, Wilmington and Baltimore Railroad Company have been paid for all service performed over their road between Baltimore and Philadelphia. The Philadelphia and Baltimore Central Railroad Company are the recognized carriers of the mails between Chester and Port Deposit. This company, for their own convenience, do not make connection with the Philadelphia, Wilmington and Baltimore Company's trains at Chester, but run their trains, and did carry the mails, from Chester over the Philadelphia, Wilmington and Baltimore Company's track to Philadelphia, a distance of about 14 miles, the weight of mails carried in the trains of the Philadelphia and Baltimore Central Railroad Company between Chester and Philadelphia being added to the weight of the mails carried in the trains of the Philadelphia, Wilmington and Baltimore Railroad Company, and the compensation therefor paid to that company, the effect being to increase the rate of pay equivalent to $8.00 per mile per annum for the 14 miles.

The Philadelphia and Baltimore Central Railroad Company objected to this adjustment, and claimed that they should be paid for the service between Chester and Philadelphia as a separate and independent route, or as if there were no other service performed between those points, which, if admitted, would have entitled them to $82 per mile per annum. The case was submitted to the law-officer of the department, who decided that the adjustment had been properly made. The case was then appealed to the Attorney-General of the United States, who sustained the decision of the Assistant Attorney-General. Again the case was referred to the United States Court of Claims, where it now awaits

action. The president of the Philadelphia, Wilmington and Baltimore Railroad Company having refused to allow mails to be carried on the trains of the Philadelphia and Baltimore Central Railroad Company between Chester and Philadelphia, wagon-service has been employed at a cost of $8 per day to make connection with the Philadelphia and Baltimore Central trains at Chester.

Upon the submission of the case to the Court of Claims, the Department proposed to the president of the Philadelphia, Wilmington and Baltimore Railroad Company that if he would permit the mails to be carried on the trains of the Philadelphia and Baltimore Central Railroad between Philadelphia and Chester, the payment therefor would be made in accordance with the decision of the Court of Claims when rendered. This proposition has been declined.

A similar case has been presented by the Philadelphia, Wilmington and Baltimore Railroad Company, in which they claim pay as for a separate and distinct route for the mails carried in their own cars run over their own track between Philadelphia and Wilmington, 28 miles, and thence over their spur of road from Wilmington to Delmar; this would make two routes between Wilmington and Chester, and three between Chester and Philadelphia, all over one track. The Philadelphia, Wilmington and Baltimore Railroad Company receive $492.90 per mile for all service performed over their track between Philadelphia and Baltimore, 96 miles. If these claims were admitted the pay would be about $485.67 per mile between Baltimore and Wilmington, 68 miles, $618.87 per mile thence to Chester, 14 miles, and $692.67 per mile thence to Philadelphia, 14 miles.

As claims of this kind are numerous, and if allowed would involve a large expenditure of money, as well as the equity of aggregating the weight of mails carried on different trains run by one company over one track, it is deemed proper to submit the matter for the consideration of Congress.

DELIVERY OF MAILS BY RAILROAD COMPANIES FROM STATIONS TO POST-OFFICES.

For sometime past it has been the practice, in certain cases, to employ railroad companies to perform mail-messenger service to offices to which they were not required by the regulations to deliver the mails. The cost of such service in the States in which the contract term expired on the 30th of June last was $35,273.50 per annum. It was determined to open this service to competition from July 1, 1877; the result is a saving of $23,197.58 per annum to the department.

GROWTH OF RAILWAY MAIL-SERVICE.

An interesting statement, in tabular form, (Table G of the Appendix to your annual report,) shows, as far as the records are complete, the length of railroad-routes, the increase in the length thereof, the miles of annual transportation and the cost of the service for each year from 1836 to 1877. It will be noticed that the length of routes was increased, during the decade from 1867 to 1877, from 34,015 to 74,546 miles, which is an average increase in length of new routes, in each year, of a little less than the entire railroad-service in operation in 1845, viz, 4,092 miles. These facts may be accepted as a fair index to the rapid expansion and very important relations of the railway system to the postal service of the entire country.

RAILROAD MAIL-COMPENSATION.

It cannot be too strongly urged that some provision be made by Congress to enable the department to command from all railroad companies such facilities as it may require, not only for the transportation of mails on all railroads, but the furnishing of such accommodations as may be required to make a distribution of the mails while in transit.

Whatever is done should be done in such a manner that it will secure permanency, as without that the department cannot adjust its service with a view to its economical administration.

The greatest uncertainty, vexation, and embarrassment is caused by the changes in the accommodations upon railroads, such as the department has experienced during the fiscal year, and cannot affect favorably the public interests.

If such legislation was given, the department could then establish between the East and the West, and the North and South such permanent postal communication, either upon the regular trains or by a combination of regular and special trains, as would result in great advantage to the public.

This matter is referred to more in detail in the report of the general superintendent of railway mail-service.

UNIFORMING RAILWAY MAIL-SERVICE EMPLOYÉS.

Legislation should be had upon the question of uniforming all employés of this department who have, in the performance of their duties, to handle the mails in public.

The uniform is already adopted by order of the Postmaster-General. In addition, there should be a penalty against unauthorized persons wearing the same.

FIRE.

It will be seen that the mails have suffered severely from fire resulting from collision on railroads. It is strongly recommended that this department be given a small sum with which to make a few experiments as to the best method of avoiding in future such occurrences. Five hundred or one thousand dollars placed at the disposal of this department for that purpose could not but secure favorable results.

PAY OF RAILWAY POST-OFFICE CLERKS.

Attention is respectfully called to the remarks of the general superintendent of railway mail service in regard to the salaries of railway post-office clerks, and the method of readjusting their salaries, and the adoption of same is earnestly recommended.

MAIL-BAGS, MAIL-CATCHERS, AND MAIL-LOCKS AND KEYS.

By reference to Table H, prepared for the appendix to your annual report, it will be seen that the total number of new mail-bags purchased and put into the service during the year 1877 was 93,700, of which 14,700 were locked pouches, used chiefly for letters, and 79,000 canvas sacks, used for printed and third-class matter, being 8,114 pouches and 1,980 sacks less than the number purchased during the previous year ended June 30, 1876.

The total expense of mail-bags and mail-catchers, including repairs,

&c, amounted to $165,641.29, being $43,206.20 less than the amount ($208,847.49) expended during the last preceding year. This curtailment of expense was caused chiefly by the large number of mail-bags reclaimed by repairs from an unserviceable condition and put into service again during the year.

The present system of repairing mail-bags still contrasts favorably with the former system, and continues to give ample proofs of the wisdom, utility, and economy of its adoption.

The total number of mail-bags repaired during the year ended 30th June last was 295,319; or 100,000 more than during the previous year.

The cost of such repairs during the year ended 30th June last amounted to $37,389.71. The same repairs, if done at the prices paid under the former system of repairs, would have amounted to $72,926.66, or about 92 per centum more (without any fraudulent practice) than the actual cost of the present system.

The total expense of mail-locks and keys during the year ended 30th June, 1877, amounted to $13,475; being $3,425.95 less than the expense of the previous year.

The following amounts are estimated to be necessary to cover the cost of requisite mail-bags, mail-catchers, mail-locks and keys for the year ending 30th June, 1879:

For mail-bags and mail-catchers	$200,000 00
For mail-locks and keys	15,000 00

The amount estimated for mail-bags and mail-catchers is the same which was appropriated by law for the current fiscal year; that for mail-locks and keys is 6¼ per centum less than the appropriation for this year.

CONTRACTS FOR MAIL-BAGS, MAIL-CATCHERS, ETC.

Appended hereto is a tabular statement of the contracts in operation the 30th June, 1877, for mail-bags, mail-catchers, &c.; also for mail-locks and keys. All orders under these contracts were properly and faithfully executed during the year, by the several contractors, with but one exception. That exception refers to the manufacture and delivery, through either carelessness or design on the part of the contractor, or of others for whom he was lawfully responsible, of quantities of mail-pouches made slightingly and of very inferior parts of leather, and accepted by the inspector, whose duty it was to reject all such.

On an intimation of leather pouches being delivered at the New York post-office, suspected of being inferior to the requirements of the contract, a thorough investigation was made. This investigation, conducted by Mr. Parker, chief special agent of this department, and Mr. Vail, general superintendent of railway mail-service, aided by the postmaster of New York and skilled experts, developed the facts above stated, and resulted in the prompt removal of an untrustworthy inspector, the appointment of a skillful and faithful inspector in his stead, and the repudiation of 489 leather pouches, at a loss to the contractor of $2,150.95, the contract price. Another consequence of this investigation has been the procurement of better pouches, in every respect, than were ever before furnished under the contract referred to.

ESTIMATES.

In the table of estimates accompanying this letter, the columns of "Cost for 1876–'77" show the contract and "adjusted" cost or price of star, steamboat, railway, and messenger service, and the yearly salaries of railway post-office clerks, route-agents, mail-route messengers, and local agents employed, as appear by the books of this bureau upon the 30th June of said years, and do not take into account the fines and deductions against contractors or the lapses in service of salaried agents for which no payments are made, all of which more or less affect the amounts finally paid, and which are accurately shown by the report of the Auditor for the Post Office Department. There will consequently be an apparent discrepancy between this table and the Auditor's statement.

The demand for increased mail facilities is probably greater at this time than ever before in the history of the department. And particularly is this true of the service other than railway. It has therefore been deemed best to make a liberal estimate for this branch of the service, and the sum of $7,090,673 is asked for.

The aggregate estimate for 1879 for inland transportation and the items incident thereto will be found to be $20,889,271, against an appropriation for the current year of $18,858,993; an increase of $2,030,278—about 10.76 per centum.

FINES AND DEDUCTIONS.

The amount of fines imposed upon contractors, and deductions made from their pay for failures and other delinquencies, for the fiscal year ended June 30. 1877, is $89,755.46, and the amount remitted for the same is $25,473.32, leaving the net amount of fines and deductions $64,282.14.

TEMPORARY CONTRACTS.

The law formerly authorized the Postmaster-General, when immediate service became necessary, or a new route was established, to make a temporary contract, without advertisement, "for a period not to exceed twelve months."

By section 12 of act of June 23, 1874, and section 251 act of August 11, 1876, the law was so amended as to limit all temporary contracts to six months. This change has caused much embarrassment to the service, and has made it necessary to issue two miscellaneous advertisements each year instead of one, as formerly, thus greatly increasing the labor and expense of the department without seeming to gain any advantage to the service.

The extension of the limit for temporary contracts to one year, as formerly, would seem to be an improvement of the law.

SPECULATIVE BIDDING.

Contracts for transportation of the mails other than by railway or steamboat are let to the lowest bidder, after advertisement. Under the law the department has no option, and cannot well have, but must let to the lowest bidder, provided he gives a good and sufficient bond for the proper performance of his contract. There has grown up, under this law, a system of speculative bidding that is a source of much trouble to the department and of frequent loss to sub-contractors, (the men

who actually do the work of carrying the mails.) The department at present can do nothing to protect the sub-contractor. This has been the occasion of some scandal during the past summer, and it is to be hoped that the law may be so amended that the department may at least extend some protection to the men who do its most important work. Several methods have been suggested, principal among which are the following:

1. To amend section 271 of the postal laws by the insertion of the word "sub-let" after the words "assign or transfer," thus confining the contracts for carrying the mails to those who expect actually to perform the service, or at least stock the routes, though they may employ some one to ride the horse or drive the stage that carries the mail. Undoubtedly this would correct the evil; but against this plan may be urged the possibility of increasing the cost of transporting the mails, for the reason that competition would be greatly restricted.

2. To give the sub contractor a lien upon the contractor's pay. This would require proper notice to the contract office, probably by filing the contract itself, whereupon said office would notify the Auditor of the Treasury for the Post Office Department of the fact of such filing, describing by name the contractor, sub-contractor, giving the number of the routes and the amount claimed by the sub-contractor. Upon the receipt of this notice the Auditor would retain out of the amount due the contractor a sum sufficient to satisfy the said claim of the sub-contractor, which would be paid under the rules and regulations now governing the payment made to contractors, provided that upon sufficient evidence that the contractor had discharged his obligations to the sub-contractor the contract office should certify that fact to the auditor, who would thereupon pay the contractor the full amount due him. This method, while it does not prevent speculative bidding—and I mean by "speculative bidding" bidding by parties who do not expect to do the service themselves, or to even invest money in the necessary stock with which to do it, but who secure a contract for the sole purpose of sub-letting it at a profit—would probably curtail its present proportions, and would give the sub-contractor a remedy of protection where now he has none. It would largely increase the labors of this office, and, to some extent, those of the Auditor's; but, if the method first suggested is considered too sweeping in its provisions, I would earnestly urge a favorable consideration of this.

NEWSPAPER ADVERTISING.

The law requires that the miscellaneous advertisement for mail service shall be published in certain newspapers, one of which shall be at the capital of the State. A recent decision of the law-officers of the government is that sections 853 and 854 of the Revised Statutes fix the rates to be allowed for such publication. These rates (forty cents per folio of one hundred words for the first insertion, and twenty cents per folio for each subsequent insertion) are so low that no newspaper could be found at the capitals of two States (Kentucky and Alabama) which would publish the advertisement at the rates fixed. The consequence is that no legal letting of the routes can be made. It is suggested that some Congressional action is necessary to relieve the department from this embarrassment.

THE TOPOGRAPHER'S OFFICE.

I earnestly recommend that the work of the office of the topographer of the department be sustained by more ample appropriations than have been allowed for the past two fiscal years, as I find that not only have the current postal diagrams, so necessary for the daily use of almost every desk in the department, been unavoidably getting in arrears, but that the work toward the construction and publication of several of the maps most urgently required has been laid aside for want of means. Maps of Georgia, Texas, Arkansas and the Indian Territory, California, Nevada, Oregon, and the Territories are daily called for, and cannot be furnished under present circumstances.

I have the honor to be, very respectfully, your obedient servant,

THOS. J. BRADY,
Second Assistant Postmaster-General.

Hon. DAVID M. KEY,
Postmaster-General.

Statement of all contracts in operation the 30th June, 1877, for mail-bags, mail-catchers, mail-bag labels, mail-bag-label cases, and mail-bag hooks.

Articles contracted for.	Names of contractors.	Residence.	Term of contract.		Prices paid.				
			From—	To—	Size No. 1.	Size No. 2.	Size No. 3.	Size No. 4.	Size No. 5.
Jute canvas mail-sacks	John Boyle	New York, N. Y	July 1, 1875	July 1, 1879	$0 66	$0 52	$0 15	.....	.....
Cotton canvas mail-sacks	....do	....do	July 1, 1875	July 1, 1879	1 32	1 02	21	.....	.....
Leather horse-mail bags	Polydore S. Thomson	....do	July 1, 1875	July 1, 1879	6 60	5 60	5 10	.....	.....
Mail-catcher pouches	John Boyle	....do	July 1, 1875	July 1, 1879	.....	.....	4 25	.....	.....
Mail-bag-label cases	Gaylord Manufacturing Company	Chicopee, Mass	July 1, 1875	July 1, 1879	.....	.....	12	.....	.....
Leather mail-pouches	J. C. Feltman	Albany, N. Y	Nov. 20, 1875	July 1, 1879	6 50	5 70	4 75	$3 80	$2 70
Use of patent for leather pouches	John Boyle, (patentee)	New York, N. Y	Aug. 7, 1875	(*)	10	10	10	10	10
Printed wooden tags	John M. May	Georgetown, D. C	Jan. 1, 1877	Jan. 1, 1878	.....	.....	003½	.....	.....
Mail-bag hooks	Plume & Atwood Manufacturing Company.	Waterbury, Conn	Aug. 1, 1876	Aug. 1, 1877	.....	.....	15 00 per M.	.....	.....
Use of patent for mail-bag hooks	George H. Fayman	Washington, D. C	June 17, 1876	(†)	.....	.....	00½	.....	.....
Mail-bag catchers	Younglove & Co	Cleveland, Ohio	.....	.....	.....	.....	15 00	.....	.....
Mail-bag-catcher sockets	....do	....do	.....	.....	70	40	.....	.....	.....

* Until aggregate sum of payments amounts to $10,000, when any further payment will cease for use of patent.
† Until aggregate sum of payments amounts to $1,250, when any further payment will cease for use of patent.

Statement of all contracts in operation the 30th June, 1877, for mail locks and keys.

Articles contracted for.	Names of contractors.	Residence.	Term of contract.		Prices paid.	
			From—	To—	Locks.	Keys.
Registered-mail locks and keys	F. W. Mix	Terryville, Conn	Jan. 1, 1874	Jan. 1, 1878	$1 75	$0 30
Letter-box locks and keys	Smith & Egge	Bridgeport, Conn	Jan. 1, 1874	Jan. 1, 1878	1 25	15
Mail-bag locks and keys, (brass)	James C. Mix	Syracuse, N. Y	July 1, 1874	July 1, 1878	74	13
Mail-bag locks and keys, (iron)	....do	....do	July 1, 1874	July 1, 1878	58	11

THOS. J. BRADY,
Second Assistant Postmaster-General.

Mail-bags and mail-bag catchers.

Object.	Cost for 1876.	Cost for 1877.	Percentum increase or decrease of 1877 as to 1876.		Appropriation for 1878.	Percentum increase or decrease of appropriation of 1878 as to cost of 1877.		Estimate for 1879.	Percentum increase or decrease as to appropriation for 1878.	
			Increase.	Decrease.		Increase.	Decrease.		Increase.	Decrease.
Inland transportation, railroad	$9,543,134 00	$9,053,936 00	.....	5⅛	$9,250,000 00	2⅛	.....	$10,140,126 00	9.62	.....
Inland transportation other than railroad	5,658,006 00	6,330,959 00	11.88	.....	6,237,993 00	.....	1.47	7,090,673 00	13.66	.....
Railway post-office clerks	1,278,340 00	1,222,690 00	.....	4.35	1,225,000 00	0.19	.....	1,385,000 00	13.06	.....
Route agents	975,280 00	994,540 00	1.97	.....	1,000,000 00	0.55	.....	1,070,000 00	7.00	.....
Mail-route messengers	145,610 00	162,086 00	11.3	.....	150,000 00	.....	7.45	171,000 00	14.00	.....
Local agents	104,910 00	105,530 00	.....	0.59	110,000 00	4.23	.....	125,000 00	13.63	.....
Mail-messengers	655,768 00	659,497 00	0.57	.....	670,000 00	1.59	.....	692,472 00	3.35	.....
Mail locks and keys	16,720 00	13,475 00	.....	19.4	16,000 00	18.73	.....	15,000 00	.....	6.25
Mail-bags and mail-bag catchers	208,847 49	165,641 29	.....	20.68	200,000 00	20.74	.....	200,000 00	.....	.....
	.....	.....	.....	.....	18,858,993 00	.....	.....	20,889,271 00	10.76	.....

NOTE.—The above estimates are based upon the contract-prices and annual salaries, without reference to fines and deductions. This will explain the apparent discrepancy between this table and the Auditor's statement.

THOS. J. BRADY,
Second Assistant Postmaster-General.

POST OFFICE DEPARTMENT,
OFFICE OF THE SECOND ASSISTANT POSTMASTER-GENERAL,
Washington, D. C., November 1, 1877.

SIR: For a statement of the mail-service for the contract-year ended June 30, 1877, &c., I have the honor to refer you to the tables hereto annexed.

Table A exhibits the character of the service, the length of routes, the number of miles of transportation, and the cost thereof, at the close of the contract-year.

Table B exhibits the railroad service as in operation on the 30th of June, 1877; also the cost per mile in each State and Territory.

Table C exhibits the steamboat service as in operation on the 30th of June, 1877.

Table D shows the increase and decrease of mail-transportation and cost in the several States and Territories during the year ended June 30, 1877.

Table E shows the weight of the mails, the speed with which they are conveyed, the accommodations for mails and agents, the trips per week, and the rates of pay per mile per annum on railroad routes in States in which the contract-term expired June 30, 1877, and also in other States and Territories, the returns having been obtained with a view to the readjustment of the pay in accordance with the act of March 3, 1873, and used also in accordance with the act of July 12, 1876, in the case of readjustments taking effect on and after July 1, 1876. This table is accompanied with an alphabetical index of the titles of the companies carrying the mails.

Table F shows the readjustment of the rates of pay per mile on railroad routes in States in which the contract-term expired June 30, 1877, and also in other States and Territories, and on certain new routes the adjustment of the rates based upon returns of the weight of the mails, the speed with which they are conveyed, the accommodations for mails and agents, and the number of trips per week, in accordance with the act of March 3, 1873, and with the act of July 12, 1876, in the case of readjustments taking effect on and after July 1, 1876. This table also is accompanied with an alphabetical index of the titles of the companies carrying the mails.

In connection with the railroad mail-service, table G shows the amount of this class of service and cost thereof, from the commencement of such service in the fiscal year ended June 30, 1836, to June 30, 1877.

Table H is a statement of the number, description and prices of mail-bags, mail-bag catchers, mail locks and keys purchased, and the expense incurred on account thereof, during the fiscal year ended June 30, 1877.

Table I is a list of railway post-office lines in the United States, June 30, 1877, showing the increase in the service since June 30, 1876.

Very respectfully, your obedient servant,

THOS. J. BRADY,
Second Assistant Postmaster-General.

Hon. DAVID M. KEY,
Postmaster-General.

A.—*Table of mail-service for the year ended June 30, 1877, as exhibited by the state of the arrangements at the close of the year, authorized by the Postmaster-General.*

[*The entire service and pay on each route are set down to the State under which the route is numbered, though extending sometimes into other States instead of being divided among the States in which the different portions lie.*]

States and Territories.	Length of routes.	Annual transportation and cost.						Total annual transportation by celerity, certainty, and security.	Total annual transportation by steamboat.	Total annual transportation by railroad.	Total annual transportation.	Total annual cost.
		Celerity, certainty, and security.		By steamboat.		By railroad.						
	Miles.	*Miles.*	*Dollars.*	*Miles.*	*Dollars.*	*Miles.*	*Dollars.*	*Miles.*	*Miles.*	*Miles.*	*Miles.*	*Dollars.*
Maine	4,587	3,459	90,592	42	900	1,086	151,269	1,596,434	12,792	1,060,471	2,669,697	242,761
New Hampshire	1,728	1,020	31,977	60	1,850	648	69,546	501,621	18,200	890,296	1,410,117	103,373
Vermont	2,244	1,556	50,982	.....	.....	688	98,746	797,177	.....	727,197	1,524,314	149,728
Massachusetts	2,837	926	56,392	45	2,500	1,866	299,877	632,710	15,600	2,818,067	3,466,377	358,769
Rhode Island	579	216	9,737	198	1,600	165	18,680	111,396	135,969	295,275	542,640	44,417
Connecticut	1,738	672	27,868	.....	.....	1,066	156,473	372,060	.....	1,872,431	2,244,491	184,341
New York	11,904	5,764	253,674	162	6,753	5,978	1,103,039	2,996,495	80,779	8,785,048	11,862,322	1,363,466
New Jersey	2,407	867	32,274	19	1,181	1,521	163,730	461,149	24,461	2,092,930	2,578,540	197,185
Pennsylvania	14,206	9,376	261,458	88	4,700	4,712	589,031	3,686,449	55,224	7,244,145	10,985,818	855,189
Delaware	427	169	6,257	.....	.....	258	21,305	79,660	.....	221,439	301,099	27,562
Maryland	3,229	1,787	61,559	290	6,150	1,152	248,348	953,677	137,280	2,211,561	3,302,518	316,057
West Virginia	5,357	4,867	76,894	240	13,700	250	35,954	1,166,620	103,740	255,990	1,526,350	126,548
Virginia	10,799	7,835	137,271	1,157	39,800	1,807	238,206	2,189,335	333,840	2,060,185	4,603,360	415,277
North Carolina	10,399	8,704	91,780	351	10,003	1,344	104,336	1,580,072	98,800	1,207,586	2,886,458	206,119
South Carolina	3,998	2,826	31,262	50	1,281	1,122	88,117	402,220	9,947	1,139,002	1,551,169	120,660
Georgia	7,549	4,962	54,871	155	3,600	2,432	192,678	772,304	32,240	2,335,086	3,139,630	251,149
Florida	7,009	2,114	27,536	4,435	75,439	460	21,161	306,549	639,409	434,772	1,380,730	124,136
Alabama	8,538	6,466	81,928	.....	.....	2,072	152,958	1,118,702	.....	2,116,081	3,234,783	234,886
Mississippi	6,553	4,791	70,678	616	9,000	1,146	89,806	876,865	91,728	861,506	1,830,099	169,484
Louisiana	5,098	3,584	105,454	994	62,114	520	45,383	810,900	269,360	468,985	1,549,245	212,951
Texas	15,869	12,930	343,440	896	69,605	1,843	168,529	2,953,909	179,135	1,507,037	4,640,081	581,574
Arkansas	9,591	6,942	168,808	2,222	94,600	427	26,072	1,872,741	387,192	280,403	2,540,336	289,480
Missouri	13,916	9,468	182,635	575	26,250	3,873	459,895	2,559,491	179,400	3,874,207	6,613,098	668,780
Tennessee	7,185	5,857	67,870	159	4,106	1,169	133,342	1,131,663	53,456	1,231,618	2,416,737	205,318
Kentucky	8,208	6,034	83,114	889	40,800	1,285	154,287	1,548,488	352,976	1,318,644	3,220,108	278,201
Ohio	12,575	6,601	146,616	216	13,993	5,758	1,033,158	2,400,646	123,193	9,093,888	11,617,727	1,193,767
Indiana	7,749	4,616	79,593	.....	.....	3,133	327,959	1,251,782	.....	3,796,698	5,048,480	407,552
Illinois	11,798	4,702	105,208	.....	.....	7,096	884,914	1,566,916	.....	8,135,930	9,702,846	990,122
Michigan	9,184	4,907	121,648	808	19,222	3,469	277,312	1,523,317	192,434	4,364,401	6,080,152	418,180
Wisconsin	7,966	5,123	85,937	.....	.....	2,843	263,692	1,369,576	.....	2,734,225	4,103,801	349,629
Iowa	10,924	7,216	138,725	.....	.....	3,708	314,679	2,110,316	.....	2,721,257	4,831,573	453,404

A.—*Table of mail-service for the year ended June 30, 1877, as exhibited by the state of the arrangements at the close of the year, &c.*—Continued.

States and Territories.	Length of routes.	Annual transportation and cost.						Total annual transportation by celerity, certainty, and security.	Total annual transportation by steamboat.	Total annual transportation by railroad.	Total annual transportation.	Total annual cost.
		Celerity, certainty, and security.		By steamboat.		By railroad.						
	Miles.	*Miles.*	*Dollars.*	*Miles.*	*Dollars.*	*Miles.*	*Dollars.*	*Miles.*	*Miles.*	*Miles.*	*Miles.*	*Dollars.*
Minnesota	7,415	5,243	86,378			2,172	136,759	1,199,354		1,648,536	2,847,890	223,137
Nebraska	8,120	6,645	155,786			1,475	345,442	1,727,680		1,030,074	2,757,754	501,228
Kansas	11,617	9,008	179,877			2,609	236,076	2,431,858		2,009,806	4,441,664	415,953
Nevada	2,318	2,175	194,405			143	7,833	945,366		89,244	1,034,610	202,238
California	10,586	7,474	405,296	962	37,100	2,150	319,082	2,591,404	240,342	1,691,330	4,523,076	761,478
Oregon	4,254	3,766	106,821	240	30,442	248	20,106	720,954	149,760	154,571	1,025,285	157,369
Washington Territory	3,063	1,142	43,699	1,816	75,900	105	5,702	238,940	120,981	65,894	425,815	125,301
Idaho Territory	1,456	1,456	91,842					412,650			412,650	91,842
Montana Territory	1,708	1,708	108,583					580,250			580,250	108,583
Dakota Territory	2,969	2,908	115,947			61	4,426	833,144		38,364	871,508	120,373
Wyoming Territory	903	903	135,924					379,368			379,368	135,924
Utah Territory	3,205	2,991	301,500			214	12,990	1,492,375		141,972	1,634,347	314,490
Colorado Territory	3,378	2,936	173,359			442	33,038	830,584		312,558	1,143,142	206,397
Indian Territory	1,276	1,276	46,617					296,452			296,452	46,617
New Mexico Territory	2,492	2,492	312,245					1,157,054			1,157,054	312,245
Arizona Territory	2,109	2,109	121,655					417,690			417,690	121,655
Total	292,820	200,589	5,663,970	17,685	666,989	74,546	9,053,936	57,956,303	4,038,238	85,358,710	147,353,251	15,384,895
Railway post-office clerks												1,222,690
Route-agents												994,540
Mail-route messengers												162,086
Local agents												105,530
Mail-messengers												659,497
Aggregate												18,529,238

THOS. J. BRADY,
Second Assistant Postmaster-General.

B.—*Railroad-service as in operation on the 30th of June, 1877.*

Number of route.	State and termini.	Corporate title of company carrying the mail.	Distance.	Total distance in each State.	Number of trips per week.	Annual pay.	Annual pay in each State.	Annual cost per mile on each route.	Remarks.
	MAINE.		*Miles.*	*Miles.*		*Dollars.*	*Dollars.*	*Dollars.*	
1	Augusta to Skowhegan	Maine Central	22 17		18 6	4,610 00		140 00 90 00	
2	Portland to Bangor	do	73.28 55		6 6	25,199 00		175 00 225 00	
3	Newport to Dexter	do	14		12	840 00		50 00	$140 per annum included for mail-messenger service.
4	Calais to Princeton	Saint Croix and Penobscot	21		6	2,100 00		50 00	$1,050 per annum included for mail-messenger service.
5	Portland to Augusta Branch, Brunswick to Bath	Maine Central	64 9			16,120 00		235 00 120 00	Twelve trips a week for 7 months; six trips a week for 5 months.
6	Portland to Canada Line	Grand Trunk	92 73		12 6	22,770 00		138 00	
7	Portland to Rochester, N. H	Portland and Rochester	52		12	3,800 00		65 00	$420 per annum included for mail-messenger service.
9	Bangor to Vanceborough	Consolidated European and North American.	118.25		6	20,693 75		175 00	
10	Old Town to Blanchard	Bangor and Piscataquis	63.8		6	3,158 10		49 50	Pay estimated on 9.6 miles.
11	Belfast to Burnham Village	Maine Central	34.19		12	1,846 20		54 00	
12	Portland to Lunenburgh Station, Vt	Portland and Ogdensburgh	116.55		12	15,734 25		135 00	Pay estimated on 43.7 miles.
13	Bath to Rockland	Knox and Lincoln	50		12	6,000 00		100 00	$1,000 per annum included for ferriage.
14	Houlton to New Brunswick Line	New Brunswick and Canada	3.82		6	171 90		45 00	
34	Farmington to Brunswick	Maine Central	71.5		6	4,676 25		67 50	$50 per annum included for mail-messenger service.
124	Portland to Portsmouth, N. H	Eastern	52		18	14,716 00		283 00	
221	Salmon Falls, N. H., to Portland, Me	Boston and Maine	44.18		12	5,798 62		131 25	
231	West Waterville to North Anson	Somerset	25.7		6	1,285 00		50 00	Pay estimated on 5.1 miles.
244	Bangor to Bucksport	Consolidated European and North American.	19.35		12	1,549 93		80 10	
				1,086.62			151,269 00		
	NEW HAMPSHIRE.								
251	Concord to Nashua	Concord	36		33	9,000 00		250 00	

B.—*Railroad-service as in operation on the 30th of June*, 1877—Continued.

Number of route.	State and termini.	Corporate title of company carrying the mail.	Distance.	Total distance in each State.	Number of trips per week.	Annual pay.	Annual pay in each State.	Annual cost per mile on each route.	Remarks.
	NEW HAMPSHIRE—Continued.		*Miles.*	*Miles.*		*Dollars.*	*Dollars.*	*Dollars.*	
252	Concord to Well's River, Vt	Boston, Concord and Montreal	52 42		18 12	13,160 00		125 00	$1,410 per annum included for mail-messenger service.
253	Concord to White River Junction, Vt. Branch, Franklin to Bristol	Northern New Hampshire	69 13		18 6	16,635 00		215 00 50 00	$1,150 per annum included for mail-messenger service.
254	Concord to Claremont Junction	Concord and Claremont	54.99		12	6,998 80		120 00	$400 per annum included for mail-messenger service.
255	Concord to Portsmouth	Concord	60		12	3,600 00		60 00	
256	Manchester to North Weare	do	20.5		12	1,025 00		50 00	
257	Nashua to Greenfield	Boston, Lowell and Nashua	27		18	1,755 00		65 00	
258	Contoocook Village to Hillsborough Bridge.	Concord and Claremont	15		12	750 00		50 00	
259	Dover to Alton Bay	Boston and Maine	28		12	1,400 00		50 00	
260	Brock's Crossing to North Conway	Portsmouth, Great Falls and Conway.	6 64.11		12 7	3,835 94		54 00	$50 per annum included for mail-messenger service.
261	Groveton to Wells River, Vt	Boston Concord and Montreal	54		12	4,860 00		90 00	
262	Hookset to Pittsfield	Concord	20		11	1,000 00		50 00	
351	Wolfborough Junction to Wolfborough.	Eastern	12.11		12	363 30		30 00	
359	Wing Road to Fabyan House	Boston, Concord and Montreal	13.85		6	742 50		50 00	$50 per annum included for mail-messenger service.
360	Portsmouth to Dover	Eastern	11.64		6	419 04		36 00	
371	Nashua to Rochester	Nashua and Rochester	49.4		6	4,001 40		81 00	
				648.6			69,545 98		
	VERMONT.								
401	Burlington to Rouse's Point, N. Y.	Central Vermont	24.5 31		15 6	9,471 50		193 00 153 00	
402	White River Junction to Derby Line.	Connecticut and Passumpsic Rivers and Massawippi Valley.	114.87		6	18,092 02		157 50	
403	Windsor to Burlington Branch, Montpelier to Barre	Central Vermont	93 26 6.76		15 15 6	23,121 80		200 20 160 20 50 00	Pay on branch estimated.

405	Bellows Falls to Windsor	do	25		12	4,612 50		184 50	
406	Bellows Falls to Burlington	do	52 67.5		15 18	18,404 10		141 30 163 80	
407	Brattleborough to Bellows Falls	do	24		12	4,428 00		184 50	
408	Saint Albans to Canada Line	do	17		6	1,300 50		76 50	
409	Saint Albans to Richford	do	28.66		6	1,934 55		67 50	
410	Lunenburgh Junction to Johnson	Portland and Ogdensburgh	78.81		6	9,851 25		125 00	
592	Richford to Newport	Missisquoi and Clyde Rivers	31.38		6	3,138 00		100 00	
525	Leicester Junction to Ticonderoga Station, N. Y.	Central Vermont	14.5		6	1,305 00		90 00	
528	Wells River to Montpelier	Montpelier and Wells River	38.62		6	2,433 06		63 00	
532	White River Junction to Woodstock.	Woodstock	14.53		6	653 85		45 00	
				688.13			98,746 13		
	MASSACHUSETTS.								
601	Boston to Portsmouth, N. H.	Eastern	56.5		24	16,667 50		295 00	
602	Boston to Salmon Falls, N. H Branch, Rollingsford to Great Falls.	Boston and Maine	71.16 3		12 12	13,901 67		193 25 50 60	
603	Boston to Nashua, N. H.	Boston, Lowell, and Nashua	42		18	9,660 00		230 00	
604	Boston to Fitchburgh	Fitchburgh	52		18	10,348 00		199 00	
605	Boston to Albany, N. Y.	Boston and Albany	101 102		26 13	99,350 70		619 50 360 60	
606	Boston to Bellingham	New York and New England	31.77		15	1,975 58		54 00	$260 per annum included for mail-messenger service.
607	Boston to Southbridge	do	53 17		12 12	9,318 60		161 10 45 90	
608	Boston to Providence, R. I	Boston and Providence	23 21		24 12	6,098 40		138 60	
609	Boston to Plymouth Branch, Atlantic to West Quincy.	Old Colony	11.28 26.72 3.45		42 12 6	6,767 50		150 00 150 00 50 00	$895 per annum included for mail-messenger service.
610	Boston to Medford	Boston and Maine	5.5		12	335 00		50 00	$60 per annum included for mail-messenger service.
615	Boston to West Lynn Depot	Eastern	10		12	500 00		50 00	
616	Boston to Dedham	Boston and Providence	11		12	550 00		50 00	
617	Grafton Depot to Millbury	Boston and Albany	4		9	180 00		45 00	
618	Salem to Gloucester	Eastern	16		18	1,072 00		67 00	
619	Salem to Marblehead	do	4		15	200 00		50 00	
620	Salem to Lawrence	do	20		6	800 00		40 00	
621	Georgetown to Haverhill	Boston and Maine	6.5		12	325 00		50 00	
622	Lawrence to Manchester, N. H.	Manchester and Lawrence	28		18	4,564 00		163 00	
623	Lowell to Lawrence	Boston, Lowell, and Nashua	14		21	1,050 00		50 00	$350 per annum included for mail-messenger service.
624	Winchester to Woburn	do	3		12	150 00		50 00	
625	Somerville Station to Concord	do	15.96		12	798 00		50 00	
626	South Acton Depot to Hudson	Fitchburg	9		12	455 00		45 00	$50 per annum included for mail-messenger service.

B.—*Railroad-service as in operation on the 30th of June*, 1877—Continued.

Number of route.	State and termini.	Corporate title of company carrying the mail.	Distance.	Total distance in each State.	Number of trips per week.	Annual pay.	Annual pay in each State.	Annual cost per mile on each route.	Remarks.
	MASSACHUSETTS—Continued.		*Miles.*	*Miles.*		*Dollars.*	*Dollars.*	*Dollars.*	
627	Ayer to Lowell	Boston, Lowell and Nashua	17		15	850 00		50 00	
628	Ayer to Greenville, N. H.	Fitchburgh	23		12	1,293 75		56 25	
629	Auburndale Station to Newton Lower Falls.	Boston and Albany	2		6	90 00		45 00	
630	Natick to Saxonville	do	4		12	180 00		45 00	
631	South Framingham to Pratt's Junction.	Boston, Clinton, Fitchburgh and New Bedford.	29		18	2,349 00		81 00	
632	South Framingham to Milford	Boston and Albany	12		24	948 00		54 00	$300 per annum included for mail-messenger service.
633	Canton Depot to Stoughton	Boston and Providence	4		12	250 00		50 00	$50 per annum included for mail-messenger service.
634	South Braintree Junction to Newport, R. I.	Old Colony	61.75		12	8,710 50		126 00	$930 per annum included for mail-messenger service.
635	South Abington to Bridgewater	do	7.75		6	390 00		40 00	$80 per annum included for mail-messenger service.
636	Braintree Depot to Cohasset	South Shore	12		12	1,400 00		58 00	$704 per annum included for mail-messenger service.
637	Middleborough to Hyannis	Old Colony	47		12	8,191 00		153 00	$1,000 per annum included for mail-messenger service.
638	Yarmouth Port to Provincetown	do	45.08		12	9,319 44		118 00	$4,000 per annum included for mail-messenger service.
639	New Bedford to West Wareham	Boston, Clinton, Fitchburgh and New Bedford.	16.25		15	1,012 50		45 00	$281.25 per annum included for mail-messenger service.
640	Taunton to Middleborough	Old Colony	10.54		30	527 00		50 00	
641	Taunton to Mansfield Junction	Boston, Clinton, Fitchburgh and New Bedford.	12		36½	1,950 00		112 50	$600 per annum included for mail-messenger service.
642	Taunton to New Bedford	do	20.5		27	3,066 35		119 70	$612.50 per annum included for mail-messenger service.
643	Worcester to Nashua, N. H.	Worcester and Nashua	46.25		18	4,453 87		96 30	
644	Sterling Junction to Fitchburgh	Boston, Clinton, Fitchburgh and New Bedford.	14		18	1,134 00		81 00	
645	Fitchburgh to Bellows Falls, Vt.	Cheshire	64		18	10,240 00		160 00	

	Branch, Greenfield to Turner's Falls.	[illegible]	5		6	[illegible]		45 00	[illegible] Adams.
647	Palmer to Miller's Falls	Central Vermont	35		6	3,150 00		90 00	
648	Springfield to South Vernon Junction, Vt.	Connecticut River	50		15	10,775 00		209 50	$300 per annum included for side supply of Chicopee Falls.
649	South Vernon Junction, Vt., to Keene, N. H.	Cheshire	24		12	1,500 00		62 50	
650	Pittsfield to North Adams	Boston and Albany	21		18	1,449 00		54 00	$315 per annum included for mail-messenger service.
651	Gloucester to Pigeon Cove	Eastern	6.5		12	450 00		50 00	$125 per annum included for mail-messenger service.
652	Wakefield to Newburyport	Boston and Maine	30.5		12	1,525 00		50 00	
653	South Braintree Junction to Fall River.	Old Colony	34		12	2,530 00		45 00	$1,000 per annum included for mail-messenger service.
654	East Salisbury to Amesbury	Eastern	4		15	250 00		50 00	$50 per annum included for mail-messenger service.
655	Palmer to Winchendon	Boston and Albany	15.75 7.96 25.54		24 18 12	2,216 25		45 00	
656	Mansfield to South Framingham	Boston, Clinton, Fitchburgh and New Bedford.	22		6	1,188 00		54 00	
657	Winchendon to Peterborough, N. H.	Boston, Barre and Gardner, lessee of Monadnock Railroad.	16.37		6	1,060 77		64 80	
658	Springfield to Athol	Springfield, Athol and Northeastern.	49.98		6	2,998 86		57 00	$150 per annum included for mail-messenger service.
659	South Framingham to Lowell	Boston, Clinton, Fitchburgh and New Bedford.	29		12	1,618 20		55 80	
660	Worcester to Winchendon	Boston, Barre and Gardner	37		12	2,913 75		78 75	
661	Holyoke to Westfield	New Haven and Northampton	10.53		12	473 85		45 00	
662	Milford to Bellingham Junction	Providence and Worcester	5		12	250 00		50 00	
736	Milford to Ashland	do	11.68		6	584 00		50 00	
737	Cohasset Narrows to Wood's Holl	Old Colony	17.67		6	1,311 51		53 00	$375 per annum included for mail-messenger service.
741	Wenham to Essex	Eastern	5.55		6	249 75		45 00	
742	Lynn to Marblehead	do	6.05		6	272 25		45 00	
743	Wakefield to Peabody	do	8.54		6	384 30		45 00	
744	Miller's Falls to Brattleborough, Vt.	Central Vermont	21		18	3,543 75		168 75	
745	Newton Depot, N. H., to Merrimac, Mass.	Boston and Maine	5.05		12	347 25		45 00	$120 per annum included for mail-messenger service.
746	Taunton to Attleborough	Boston, Clinton, Fitchburgh and New Bedford.	16.67		28	1,125 22		67 50	
747	Cohasset to South Duxbury	Duxbury and Cohasset	17.57		6	790 65		45 00	
753	Ashburnham Depot to Ashburnham.	Ashburnham	2.89		6	130 05		45 00	
754	New Bedford to Fall River	Fall River	15		6	675 00		45 00	
755	North Brookfield to East Brookfield.	Boston and Albany, lessee of North Brookfield Railroad.	4.41		24	198 45		45 00	
				1,865.95			299,877 54		

B.—*Railroad-service as in operation on the 30th of June*, 1877—Continued.

Number of route.	State and termini.	Corporate title of company carrying the mail.	Distance.	Total distance in each State.	Number of trips per week.	Annual pay.	Annual pay in each State.	Annual cost per mile on each route.	Remarks.
	RHODE ISLAND.		*Miles.*	*Miles.*		*Dollars.*	*Dollars.*	*Dollars.*	
801	Providence to Worcester, Mass	Providence and Worcester	44		18	6,340 00		110 00	$1,500 per annum included for mail-messenger service.
802	Providence to New London, Conn.	Stonington and Providence	63.75		22½	8,319 37		130 50	
803	Providence to Bristol	Providence, Warren and Bristol	14.6		12	1,926 00		60 00	$1,050 per annum included for mail-messenger service.
804	Warren to Fall River, Mass	Fall River, Warren and Providence.	7		6	420 00		60 00	
823	Providence to Pascoag	Providence and Springfield	23.12		12	1,040 40		45 00	
825	Wickford Landing to Wickford Junction.	Newport and Wickford Railroad and Steamboat Company.	3.4		15½	177 48		52 20	
830	Kingston Depot to Narragansett Pier.	Narragansett Pier	9.14		6	457.00		50 00	Pay estimated.
				165.01			18,680 25		
	CONNECTICUT.								
901	Norwich to Worcester, Mass	New York and New England, lessee of Norwich and Worcester Railroad.	60		12	4,590 00		76 50	
902	New London to Palmer, Mass	Central Vermont	30 35		23 18	7,020 00		108 00	
903	Middletown to Berlin Depot	New York, New Haven and Hartford.	10		16	718 00		46 80	$250 per annum included for mail-messenger service.
904	New Haven to New London	do	50		28	7,942 00		157 50	$67 per annum included for mail-messenger service.
905	New Haven to Springfield, Mass. Branch, Windsor Locks to Suffield.	do	63.833 4.76		34 12	28,766 85		447 30 45 00	
906	New Haven to Williamsburgh, Mass. Branch, Farmington to New Hartford.	New Haven and Northampton	85.48 16.56		12 12	13,054 32		144 00 45 00	
907	New Haven to New York	New York, New Haven and Hartford.	76.333		31	40,876 50		535 50	
908	Bridgeport to Winsted Branch, Waterbury to Watertown.	Naugatuck	62 5.75		14 12	6,993 15		106 20 45 00	$150 per annum included for mail-messenger service.

909	Bridgeport to Pittsfield, Mass..	Housatonic	110.55		12	10,204 47		86 40	
	Branch, Van Deusenville to State Line.		11.06		12			45 00	
	Branch, Danbury to Brookfield Junction.		5.75		6			27 00	
910	South Norwalk to Danbury	Danbury and Norwalk	23.5		24½	2,776 95		99 00	
	Branch, Branchville to Ridgefield.		4		12			45 00	
	Branch, Bethel to Hawleyville..		6.01		12			45 00	
911	Waterbury to Providence, R. I...	Hartford, Providence and Fishkill.	122.5		22¾	8,820 00		72 00	
912	Vernon Depot to Rockville.....	.....do	4.625		18	476 87		45 00	$368.75 per annum included for mail-messenger service.
	Side-supply of Vernon								
913	New Haven to Willimantic.....	Boston and New York Air Line...	56		8½	8,215 20		146 70	
914	Hartford to Saybrook Point.....	Connecticut Valley	43.16		12	2,330 64		54 00	
915	New Haven to Ansonia	New Haven and Derby	13.5		12	742 50		55 00	
916	Hartford to Millerton, N. Y	Connecticut Western	69.18		9½	4,150 80		60 00	
917	Litchfield to Hawleyville	Shepaug	32.25		12	1,935 00		60 00	
975	East Thompson to Willimantic ...	New York and New England	33.68		6	5,304 60		157 50	
991	Hartford to Springfield, Mass.....	Connecticut Valley and Springfield	31.1		6	1,555 00		50 00	Pay estimated.
				1,066.58			156,472 85		
	NEW YORK.								
1201	New York to Dunkirk	Erie	332		17½	151,852 10		341 90	
			127		17½			301 90	
1202	Suffern to Piermont	.....do	18		6	900 00		50 00	
1203	Buffalo to Suspension Bridge	.....do	25.94		13	1,517 49		58 50	
1204	Newburgh to Chester	.....do	19.75		12	1,921 25		65 00	
	Branch, Vail's Gate to Junction with main stem.		12.75		12			50 00	
1205	Rochester to Avon	.....do	18		12	1,296 00		72 00	
1206	Avon to Dansville	.....do	30.73		12	1,843 80		60 00	
1207	Attica to Corning	.....do	111		19½	27,472 50		247 50	
1208	Buffalo to Hornellsville	.....do	91		22½	20,475 00		225 00	
1209	Goshen to Montgomery	.....do	10.25		6	512 50		50 00	
1210	Goshen to Pine Island	.....do	11		6	440 00		40 00	
1211	New York to Troy	New York Central and Hudson River.	144		46½	81,534 60		559 20	
			6		46½			168 30	
1212	Troy to Schenectady	.....do	22		18	1,623 60		73 80	
1213	Syracuse to Rochester	.....do	104		21½	14,040 00		135 00	
1214	Canandaigua to Niagara Falls	.....do	97		6	6,547 50		67 50	
1215	Buffalo to Lockport	New York Central and Hudson River.	22		12	1,485 00		67 50	
1216	Buffalo to Lewiston	.....do	29		6	1,957 50		67 50	
1217	Albany to Buffalo	.....do	298		34	176,028 60		590 70	
1218	Rochester to Niagara Falls	.....do	76		24	14,865 60		165 60	$2,280 per annum included for railway post-office cars.
1219	New York to Chatham Village	New York and Harlem	66		12	13,257 35		102 70	$500 per annum included for conveying carriers to Fordham.
			64.5		6			92 70	
1221	Eagle Bridge to Rutland, Vt	Delaware and Hudson Canal Company.	51		18	8,709 75		137 70	
			11.5		30			146 70	
1223	Schenectady to Ballston	.....do	16		6	748 80		46 80	

B.—*Railroad-service as in operation on the 30th of June*, 1877—Continued.

Number of route.	State and termini.	Corporate title of company carrying the mail.	Distance.	Total distance in each State.	Number of trips per week.	Annual pay.	Annual pay in each State.	Annual cost per mile on each route.	Remarks.
	NEW YORK—Continued.		*Miles.*	*Miles.*		*Dollars.*	*Dollars.*	*Dollars.*	
1224	Albany to Canada Line	Delaware and Hudson Canal Company.	189.93		17½	27,827 42		136 80	
	Branch, Whitehall to Castleton, Vt.		16		6			90 00	
	Branch, Albany Junction to Troy		6		24			67 50	
1225	Oswego to Richland	Rome, Watertown and Ogdensburgh.	28.5		12	1,852 50		65 00	
1226	Watertown to Cape Vincent	do	26		12	1,625 00		62 50	
1227	Rome to Ogdensburgh	do	72.62		18	21,158 50		138 00	
	Branch, De Kalb Junction to Norwood.		69.38		12			138 00	
			25		6			62 50	
1228	Chenango Forks to Norwich	Delaware, Lackawanna and Western.	30.69		12	1,841 40		60 00	
1229	Utica to Norwich	do	54.5		12	4,360 00		80 00	
1230	Owego to Ithaca	do	35		12	2,800 00		80 00	
1231	Cassville Junction to Richfield Springs.	do	21		12	1,155 00		55 00	
1232	Mineola to Locust Valley	Long Island	12.25		12	551 25		45 00	
1233	New York to Greenport	do	32		12	10,140 50		81 00	$2,000 per annum included for mail-messenger service at New York.
	Branch, Mineola to Hampstead.		35		9				
			31		6				
			2.5		12				
1234	Hicksville to Port Jefferson	do	20		12	2,119 50		54 00	
			16.5		12			63 00	
1235	Oswego to Middletown	New York and Oswego Midland	250.2		6	11,619 00		45 00	
	Branch, Summit Junction to Ellenville.		8		6				
1236	Sidney Plains to New Berlin	do	24.84		6	1,117 80		45 00	Pay estimated.
1238	Norwich to Cortland Village	do	49.21		6	2,214 45		45 00	
1239	Clinton to Rome	Rome and Clinton	13.75		6	618 75		45 00	
1240	Walton to Delhi	New York and Oswego Midland	16		6	720 00		45 00	
1241	Buffalo to Chicago, Ill	Lake Shore and Michigan Southern	184.5		19	310,011 61		708 50	
			34.2					719 75	
			79.3					649 12	
			143					251 80	
			101					665 30	
1242	Rouse's Point to Ogdensburgh	Ogdensburgh and Lake Champlain	119		9	13,387 50		112 50	

1244	Cobleskill to Cherry Valley	Delaware and Hudson Canal Company.	22.47	.....	6	1,011 15	.....	45 00	
1245	Albany to Binghamton	do	142	.....	16½	12,907 80	.....	90 90	
1246	Schoharie to Middleburgh	Middleburgh and Schoharie	5.5	.....	12	367 50	.....	45 00	$120 per annum included for side-service.
1247	Central Bridge to Schoharie	Schoharie Valley	5	.....	18	360 00	.....	72 00	
1248	Utica to Smith Valley Station	Utica, Clinton and Binghamton	31.4	.....	6	1,413 00	.....	45 00	
1249	Buffalo to Emporium	Buffalo, New York and Philadelphia.	123.51	.....	6	7,410 60	.....	60 00	
1250	Fredonia to Dunkirk	Dunkirk and Fredonia	3.5	.....	27	500 00	.....	142 86	
1251	Skaneateles Junction to Skaneateles.	Skaneateles	5.5	.....	12	560 00	.....	50 00	$285 per annum included for mail-messenger service.
1252	Brocton to Corry, Pa	Allegheny Valley	45.3	.....	6	2,760 81	.....	47 70	$600 per annum included for side-service.
1253	Chesterville to Warwick	Warwick Valley	11	.....	12	495 00	.....	45 00	
1255	Canandaigua to Elmira	Northern Central	68.5	.....	12	7,459 65	.....	108 90	
1256	Syracuse to Oswego	Oswego and Syracuse	35.5	.....	18	3,550 00	.....	100 00	
1257	Syracuse to Binghamton	Syracuse, Binghamton and New York.	80	.....	12	7,200 00	.....	90 00	
1258	Rouse's Point to Canada Line	Champlain and Saint Lawrence	2.25	.....	6	262 50	.....	116 66	
1259	Troy to North Adams, Mass Branch, North Hoosick Junction to State Line.	Troy and Boston	23.2 26.8 5.5	....	24 18 6	6,243 75	.....	112 50	
1260	Stapleton to Tottenville	Staten Island	21	.....	12	1,800 00	.....	50 00	$750 per annum included for side-service.
1261	Hudson to Chatham Village	Boston and Albany	17.25	.....	12	776 25	.....	45 00	
1262	East Gainesville to Perry	Rochester and Pine Creek	6.55	.....	12	327 50	.....	50 00	
1264	Syracuse to Earlville	Syracuse and Chenango	20 22.47	....	12 6	2,123 50	.....	50 00	
1265	Dunkirk to Titusville, Pa	New York Central and Hudson River.	91.16	.....	6	4,102 20	.....	45 00	
1266	Ithaca to State Line	Geneva, Ithaca and Sayre	34.6	.....	6	1,557 00	.....	45 00	
1267	Syracuse to Lacona	Rome, Watertown and Ogdensburgh.	44.92	.....	12	2,223 54	.....	49 50	
1268	Rondout to Stamford	Ulster and Delaware	73.3	.....	6	3,298 50	.....	45 00	
1269	Ithaca to Cortland Village	Utica, Ithaca and Elmira	23	.....	12	1,345 50	.....	58 50	
1270	Port Jervis to Monticello	Monticello and Port Jervis	24	.....	6	1,200 00	.....	50 00	
1271	Poughkeepsie to State Line	Poughkeepsie, Hartford and Boston.	43.15	.....	6	1,941 75	.....	45 00	
1272	Canastota to Cazenovia	Cazenovia, De Ruyter and Canastota.	15	.....	18	675 00	.....	45 00	
1273	Fonda to Gloversville	Fonda, Johnstown and Gloversville.	10	.....	12	1,390 00	.....	64 00	$750 per annum included for side-service.
1274	Johnsonville to Greenwich	Greenwich and Johnsonville	14	.....	12	540 00	.....	38 57	
1275	Montgomery to Kingston	Wallkill Valley	33.46	.....	6	903 42	.....	27 00	
1276	Athens, Pa., to Fair Haven, N. Y.	Southern Central	122	.....	6	7,788 00	.....	54 00	$1,200 per annum included for side-service.
1277	Newburgh to Millerton Branch, Clove Branch Junction to Sylvan Lake.	Dutchess and Columbia	56.5 4.5	....	6 6	2,745 00	.....	45 00	
1278	Cooperstown to Cooperstown Junction.	Cooperstown and Susquehanna Valley.	16	.....	12	900 00	.....	56 25	

B.—*Railroad-service as in operation on the 30th of June*, 1877—Continued.

Number of route.	State and termini.	Corporate title of company carrying the mail.	Distance.	Total distance in each State.	Number of trips per week.	Annual pay.	Annual pay in each State.	Annual cost per mile on each route.	Remarks.
	NEW YORK—Continued.		*Miles.*	*Miles.*		*Dollars.*	*Dollars.*	*Dollars.*	
1279	Chatham Village to Rutland, Vt.	Central Vermont	111.3		6	12,629 25		112 50	
	Branch, North Bennington to State Line.		2		6			54 00	
1280	Plattsburgh to Au Sable Forks	Delaware and Hudson Canal Company.	23		6	1,035 00		45 00	
1283	Utica to Watertown	Utica and Black River	92.22		12	5,394 87		58 50	
1284	Cayuga to Ithaca	Cayuga	38.05		6	2,359 10		62 00	
1285	Sodus Point to Gorham Station	Sodus Point and Southern	34		6	1,700 00		50 00	
1286	Horseheads to Ithaca	Utica, Ithaca and Elmira	48.5		6	2,269 80		46 80	
1287	Oswego to Lewiston	Rome, Watertown and Ogdensburg.	146.92		6	7,404 77		50 40	Pay estimated.
1288	Carthage to Morristown	Utica and Black River	20.5		12	3,632 45		67 50	
	Branch, Theresa Junction to Clayton.		29.58		12			51 30	
			16.25		12			45 00	
1289	Freeville to Scipio	Utica, Ithaca and Elmira	28.82		6	1,296 90		45 00	
1290	Buffalo to Jamestown	Buffalo and Jamestown	71.09		6	4,478 67		63 00	
1291	Golden's Bridge to Mahopac	New York and Harlem	7.5		6	337 50		45 00	
1292	Crawford Junction to Pine Bush	Middletown and Crawford	10.18		6	554 10		45 00	$96 per annum included for mail-messenger service.
1293	Ithaca to Geneva	Geneva, Ithaca and Sayre	40.25		6	2,282 17		56 70	
1294	Watertown to Sackett's Harbor	Utica and Black River	12.5		6	562 50		45 00	
1295	New York to Babylon	Southern Railroad Company of Long Island.	36.25		12	3,581 25		45 00	$1,950 per annum included for side-service.
1296	New York to Patchogue	Flushing, North Shore and Central	59.21		12	6,914 23		51 30	$3,600 per annum included for side-service.
	Branch, Flushing to Whitestone		3.12		12			45 00	
	Branch, Bay Side to Manhasset		3.03		12			45 00	
1802	Quaker Street to Schenectady	Delaware and Hudson Canal Company.	15		6	607 50		40 50	
1803	Nineveh Junction to Jefferson Junction.	do	21		6	850 50		40 50	
1804	Saratoga Springs to North Creek	Adirondack	57.96		6	3,755 80		64 80	
1805	Thirtieth Street, New York, to Spuyten Duyvil.	New York Central and Hudson River.	10		18	450 00		45 00	
1806	Manorville to Sag Harbor	Long Island	35.25		6	1,713 15		48 60	
1810	Bath to Hammondsport	Bath and Hammondsport	9.4		15	423 00		45 00	
1811	Rochester to Charlotte	New York Central and Hudson River.	9		12	421 20		46 80	

1812	Rhinecliff to Boston Corner	Rhinebeck and Connecticut	35.2		6	1,584 00		45 00	
1813	Gloversville to Northville	Gloversville and Northville	17.375		12	1,288 45		68 40	$100 per annum included for side-service.
1815	Fort Edward to Glens Falls	Delaware and Hudson Canal Company.	6.92		12	379 90		54 90	
1816	Crown Point to Hammondsville	Crown Point Iron Company's Railroad.	11.82		6	372 33		31 50	
1823	West Chazy to Rouse's Point	Delaware and Hudson Canal Company.	15 29		12	2,091 67		136 80	
1825	Valley Stream to Oceanus	Long Island	5.13 3.37		6 6	382 50		45 00	Service omitted during four months on 3.37 miles.
				5,978.065			1,103,039 60		
	NEW JERSEY.								
7001	New York to Easton, Pa	Central Railroad Company of New Jersey.	74		49	10,656 00		144 00	
7002	Somerville to Flemington	do	16.06		6	621 52		38 70	
7003	Elizabethport to Sea Plain	do	47.9		12	2,931 48		61 20	
7004	New York to West Philadelphia, Pa. Branch, Princeton Junction to Princeton. Branch, Frankford Junction to Kensington Station.	Pennsylvania	90 3.2 2.95		47 12 18	75,934 35		839 30 49 50 81 00	
7005	Camden to Monmouth Junction Branch, Bordentown to Trenton Branch, Jamesburgh to South Amboy.	do	53.56 7 14.95		12 12 6	5,628 51		81 00 88 20 45 00	
7006	Philadelphia, Pa., to Hightstown, N. J. Branch, Mount Holly to Burlington.	do	25 27.5 7		12 6 12	3,392 50		67 50 36 00 45 00	$400 per annum included for mail-messenger service.
7007	Mount Holly to Medford	do	6.5		12	292 50		45 00	
7008	Trenton to Intersection with Delaware, Lackawanna and Western Railroad.	do	68.7		15	4,946 40		72 00	
7009	Lambertville to Flemington	do	12.13		12	545 85		45 00	
7010	Greensburgh Station to New Brunswick.	do	29.13		6	1,048 68		36 00	
7011	Rocky Hill to Monmouth Junction	do	8		6	360 00		45 00	
7012	Kinkora to Lewistown	do	10.81		6	389 16		36 00	
7013	New York to Easton, Pa	Morris and Essex	54 19 14.4		12 18 6	9,555 30		117 90 126 90 54 00	
7014	Dover to Chester	do	10		9	450 00		45 00	
7015	Camden to Atlantic City	Camden and Atlantic	60			3,240 00		54 00	18 trips a week for 4 months, 12 trips a week for 8 months.
7016	Egg Harbor City to May's Landing.	do	7.43		12	334 35		45 00	

B.—*Railroad-service as in operation on the 30th of June, 1877*—Continued.

Number of route	State and termini.	Corporate title of company carrying the mail.	Distance.	Total distance in each State.	Number of trips per week.	Annual pay.	Annual pay in each State.	Annual cost per mile on each route.	Remarks.
	NEW JERSEY—Continued.		*Miles.*	*Miles.*		*Dollars.*	*Dollars.*	*Dollars.*	
7017	New York to Nyack, N. Y	Northern Railroad Company of New Jersey.	30		6	2,008 00		45 00	$658 per annum included for side-service.
7018	Philadelphia, Pa., to Bridgeton, N. J.	West Jersey	38.4		12	4,401 60		99 00	$600 per annum included for side-service.
7019	Glassborough to Millville	do	22		12	1,683 00		76 50	
7020	Millville to Cape May	do	41		12	2,214 00		54 00	
7021	Elmer to Salem	do	16.6		12	747 00		45 00	
7022	Woodbury to Swedesborough	do	11		6	495 00		45 00	
7023	Jamesburgh to Sea Girt	Freehold, Jamesburgh and Agricultural.	27.7		12	1,788 64		45 00	$542.14 per annum included for side-service.
7024	New York to Stony Point, N. Y	New Jersey and New York	16.5 27.18		6	1,720 98		45 00 36 00	
7025	Waterloo to Franklin Furnace.	Sussex	12 12.76		12 6	1,495 00		45 00	$100 per annum included for side-service on branch.
	Branch, La Fayette Junction to Branchville.		6.24		6				
7026	Sandy Hook to Pemberton Junction.	New Jersey Southern	41 24		12 6	5,274 00		60 30 60 30	
	Branch, Eatontown to Port Monmouth.		9.8		9			45 00	
	Branch, Manchester to Barnegat Junction.		20.3		9			45 00	
7027	Newark to Mont Clair	Newark and Bloomfield	5.67		12	255 15		45 00	
7028	New York to Denville	Delaware, Lackawanna and Western.	35.93		18	3,621 75		100 80	
7029	Whiting to Atco	New Jersey Southern	33.3		6	1,498 50		45 00	
7030	Newark to Paterson	Erie	13.12		6	590 40		45 00	
7031	Atsion to Bridgeton	Vineland	37.75		6	1,359 00		36 00	
7032	Whiting to Long Beach	Tuckerton	29.56 8.5		6	1,425 82		45 00 45 00	Six trips a week for three months on 8.5 miles.
7033	Bridgeton to Port Norris	Bridgeton and Port Norris	20.24		6	1,196 48		27 00	$650 per annum included for side-service.
7034	Jersey City to Greenwood Lake	Mont Clair and Greenwood Lake	46.9		6	1,688 40		36 00	Pay on part of route estimated.
7035	Atco to Williamstown	Williamstown	9		6	243 00		27 00	
7036	Summit to Bernardsville	New Jersey West Line	14.6		6	657 00		45 00	

		Jersey.		1,421.51			163,730 45		
	PENNSYLVANIA.								
8001	Philadelphia to Pittsburgh	Pennsylvania	353.6		37¼	284,860 16		805 60	
8002	Philadelphia to Pottsville	Philadelphia and Reading	92.5		14½	10,406 25		112 50	
8003	Philadelphia to West Chester	West Chester and Philadelphia	26.13		18	1,866 52		67 50	$102.75 per annum included for side-service.
8004	Philadelphia to Bethlehem	North Pennsylvania	54.6		45½	5,846 40		99 00	
	Branch, Lansdale to Doylestown		9.8		45½			45 00	
8005	Philadelphia to Norristown	Philadelphia and Reading	16.24		12	803 88		49 50	
8006	Philadelphia to Darby	Philadelphia and Darby	5		6	450 00		90 00	
8007	Bridgeport to Downingtown	Philadelphia and Reading	21.48		6	579 96		27 00	
8008	Lamokin to Port Deposit	Philadelphia and Baltimore Central	58.25		12	4,298 85		73 80	
8009	Honesdale to Lackawaxen	Erie	25		12	1,350 00		54 00	
8010	East Penn Junction to Waverly	Lehigh Valley	190.67		20½	27,971 28		146 70	
8011	Penn Haven Junction to Mount Carmel.	do	52.84		12	2,377 80		45 00	
8012	Hazel Creek Bridge to Audenried	do	8.5		6	382 50		45 00	
8013	Pottsville to Herndon	Philadelphia and Reading	81.1		10½	4,014 45		49 50	
8014	Port Clinton to Williamsport	do	121.53		7	6,562 62		54 00	
8015	Sunbury to Tombicken	Pennsylvania	44.1		6	2,143 26		48 60	
8016	Penn Haven Junction to Tombicken.	Lehigh Valley	24.7		14½	2,159 10		72 00	
			6.23		12			45 00	
			2.23		6			45 00	
8017	Scranton to Northumberland	Delaware, Lackawanna and Western.	80		7½	6,480 00		81 00	
8018	Scranton to Carbondale	Delaware and Hudson Canal Company.	17.11		12	1,114 45		45 00	$344.50 per annum included for mail-messenger service.
8019	Binghamton, N. Y., to New Hampton, N. J.	Delaware, Lackawanna and Western.	144.5		9¾	11,054 25		76 50	
8020	Blossburgh to Corning, N. Y	Tioga	39.88		12	3,341 70		67 50	
	Branch to Fall Brook		6.85		12			45 00	
	Branch to Morris Run		3.8		6			45 00	
	Branch to Arnot		3.79		6			45 00	
8021	Williamsport to Elmira, N. Y	Northern Central	78		12	12,480 00		160 00	
8022	Sunbury to Erie	Pennsylvania	39.8		18	32,538 53		178 75	
			247.8		18			102 60	
8023	Sunbury to Mount Carmel	Northern Central	28		10	1,260 00		45 00	
8024	Alton to Carrollton, N. Y	Erie	25.5		6	918 00		36 00	
8025	Irvine to Corry	Pittsburgh, Titusville and Buffalo	95		12	5,728 50		60 30	
8026	Strasburgh to Leaman Place	Herr & Company	4.25		6	225 00		52 94	
8027	Lancaster to Middletown	Pennsylvania	31.2		15	1,965 60		63 00	
8028	Harrisburgh to Auburn	Philadelphia and Reading	58.3		7½	2,623 50		45 00	
8029	Newcastle to Homewood	Pittsburgh, Fort Wayne and Chicago.	15		12	2,025 00		135 00	
8030	Harrisburgh to Martinsburgh, W. Va.	Cumberland Valley	94		11½	6,511 20		69 30	

B.—*Railroad-service as in operation on the 30th of June, 1877*—Continued.

Number of route.	State and termini.	Corporate title of company carrying the mail.	Distance.	Total distance in each State.	Number of trips per week.	Annual pay.	Annual pay in each State.	Annual cost per mile on each route.	Remarks.
	PENNSYLVANIA—Continued.		*Miles.*	*Miles.*		*Dollars.*	*Dollars.*	*Dollars.*	
8031	Columbia to Sinking Spring	Reading and Columbia	39.7		18	2,973 42		48 60	
	Branch, Junction to Quarryville		23.2		18			45 00	
8033	Columbia to Frederick, Md	Pennsylvania, lessee of Hanover Branch Railroad.	69.5		6½	3,127 50		45 00	
8034	Hanover to Gettysburgh	Hanover Branch	17.5		12	945 00		54 00	
8035	Huntingdon to Mount Dallas Station.	Huntingdon and Broad Top	44		6	2,700 00		54 00	
			6		6				
8036	Tyrone to Curwinsville	Pennsylvania	40.6		12	2,755 35		58 50	Pay on 6.5 miles estimated.
			6.5		12				
8037	Altoona to Martinsburgh	do	22.3		18	1,440 00		45 00	
	Branch, Duncansville to Newry		3		6				
	Branch, Martinsburgh Junction to Henrietta.		6.7		6				
8038	Cresson to Ebensburgh	do	11		12	495 00		45 00	
8039	Tyrone to Lock Haven	do	55.1		12	3,245 17		56 25	
	Branch, Milesburgh to Bellefonte.		2.7		12			54 00	
8040	Blairsville to Allegheny	do	63.7		9¼	3,726 45		58 50	
8041	Washington to Wheeling, W. Va	Hempfield	32		12	1,961 00		49 50	$377 per annum included for side-service.
8042	Pittsburgh to Oil City	Allegheny Valley	132.71		18	11,943 90		90 00	
8043	Branch Junction to Indiana	Pennsylvania	19		12	1,026 00		54 00	
8044	Meadville to Oil City	Atlantic and Great Western	36.25		9	2,039 06		56 25	
8045	Miles Grove to Newcastle	Erie and Pittsburgh	83		12	9,711 00		117 00	
8046	Oil City to Ashtabula, Ohio	Lake Shore and Michigan Southern	87.09		6	3,919 05		45 00	
8047	Bethlehem to Chapman Quarries	Lehigh and Lackawanna	15		12	675 00		45 00	
8048	Downingtown to New Holland	Pennsylvania	28		6	1,260 00		45 00	Pay on 10 miles estimated.
8049	West Chester to intersection Pennsylvania Railroad.	West Chester	9		6	270 00		30 00	
8050	Junction, Pennsylvania Railroad to Milroy.	Pennsylvania	12.5		12	562 50		45 00	
8051	Pottsville to Frackville	Philadelphia and Reading	8.51		10½	382 95		45 00	
8052	Greenville to Hilliard's	Shenango and Allegheny Valley	47.5		6	2,565 00		54 00	Pay on 14 miles estimated.
8053	Carlisle to Mountain Creek	South Mountain Iron Company	18		6	450 00		25 00	
8054	Freeport to Butler	Pennsylvania	21.3		12	958 50		45 00	

8055	Wilmington, Del., to Reading, Pa.	Wilmington and Reading	72.6		6	3,267 00		45 00	
8056	Pittsburgh to Washington	Pittsburgh, Cincinnati and Saint Louis.	22.8		12	1,333 80		58 50	
8057	Perkiomen Junction to Emaus	Philadelphia and Reading	37.72		6¾	1,097 40		45 00	
8058	Pottstown to Colebrookdale	do	13.05		6	469 80		36 00	
8059	Barnitz to Williams' Mill Junction	Harrisburgh and Potomac	13.9		6	625 50		45 00	Pay estimated.
8060	Lebanon to Tower City	Philadelphia and Reading	43.1		7½	1,551 60		36 00	
8061	Towanda to Bernice	Sullivan and Erie Coal and Railroad Company.	29.32		6	1,187 46		40 50	
8062	Schuylkill Haven to Glen Carbon	Philadelphia and Reading	13.2		12	475 20		36 00	
8063	Topton to Kutztown	do	4.36		9	196 20		45 00	
8064	Pittsburgh to Cumberland, Md.	Pittsburgh and Connellsville	147.8		53½	15,530 58		98 10	
	Branch, Broad Ford to Mount Pleasant.		9		12			45 00	
	Branch, Connellsville to Uniontown.		12		12			52 20	
8065	Carbondale to Susquehanna Depot	Erie	38.25		6	1,721 25		45 00	
8066	Lawrenceville to Antrim	Falls Brook Coal Company	23.5		12	2,198 25		67 50	
			13.6		6			45 00	
8067	Phœnixville to Eagle	Philadelphia and Reading	11.12		6	500 40		45 00	
8068	Lewisburgh to Laurelton	Pennsylvania, lessee of Lewisburgh Center and Spruce Creek Railroad.	20.73		6	1,226 42		54 00	$107 per annum included for mail-messenger service.
8069	Lewistown Junction to Sunbury	Pennsylvania, lessee of Sunbury and Lewistown Railroad.	45		6	2,025 00		45 00	Pay estimated.
8070	Union City to Titusville	Pittsburgh, Titusville and Buffalo.	14.1		6	634 50		45 00	
8071	Towanda to Barclay	Towanda Coal Company, lessee of Barclay Railroad.	12		6	432 00		36 00	
8072	Shaff's Bridge to Somerset	Somerset and Mineral Point	9.1		12	609 50		45 00	$200 per annum included for mail-messenger service.
8073	Marion Junction to Mercersburgh	Cumberland Valley	21.44		6	964 80		45 00	
8074	Mount Dallas Station to New Bridgeport	Pennsylvania	32		7	1,440 00		45 00	
8075	Allentown to Harrisburgh	Philadelphia and Reading	90		26½	9,963 00		110 70	$145 per annum included for mail-messenger service.
8076	Conshohocken to Flourtown	do	7.25		6	340 75		27 00	
8077	Easton to Allentown	Lehigh Valley	17.84		64	2,890 08		162 00	
8078	Red Bank Furnace to Driftwood	Allegheny Valley	109.95		6	4,947 75		45 00	
8079	Chambersburgh to Mont Alto	Mont Alto	14.75		6	531 00		36 00	
8080	Tunkhannock to Montrose	Montrose	28.05		6	1,009 80		36 00	
8081	Lawrence to Elkland	Falls Brook Coal Company	13.08		12	588 60		45 00	
8082	Mechanicsburgh to Dillsburgh	Cumberland Valley	8.85		6	318 60		36 00	
8083	Pittsburgh to Monongahela City	Pittsburgh, Virginia and Charleston	31.84		9	1,919 95		60 30	
8084	Valley Junction to Eobvale, Md	Bachman Valley	13.3		6	359 10		27 00	
8085	Pomeroy to Delaware City, Del	Pennsylvania	38.58		6	1,388 88		36 00	
8086	Hollidaysburgh to Royer	do	21.25		9½	860 62		40 50	
8087	Mount Union to Broad Top	East Broad Top Railroad and Coal Company.	32.23		6	1,160 28		36 00	
8088	Pollock to Butler	Parker and Karns City	27		6	1,215 00		45 00	Pay estimated.
8089	Antestown to Lloydsville	Bell's Gap	8.82		6	396 90		45 00	
8090	Philipsburgh to Morrisdale Mines	Pennsylvania	3.69		6	166 05		45 00	

B.—*Railroad-service as in operation on the 30th of June*, 1877—Continued.

Number of route.	State and termini.	Corporate title of company carrying the mail.	Distance.	Total distance in each State.	Number of trips per week.	Annual pay.	Annual pay in each State.	Annual cost per mile on each route.	Remarks.
	PENNSYLVANIA—Continued.		*Miles.*	*Miles.*		*Dollars.*	*Dollars.*	*Dollars.*	
8091	Reading to Slatington	Philadelphia and Reading, lessee of Bucks County Railroad.	43.32		6	1,754 46		40 50	
8092	Berlin to Garrett	Buffalo Valley	8.62		12	387 90		45 00	
8093	Larabee to Clermont	McKean and Buffalo	23.3		6	943 65		40 50	
8094	York to Delta	Peach Bottom	35.56		6	1,600 20		45 00	
8095	Lawsonham to Sligo	Allegheny Valley	10.47		6	376 92		36 00	
8096	Oxford to Peter's Creek	Peach Bottom	20.51		6	738 36		36 00	Pay on 3.76 miles estimated.
8097	Pittsburgh to Castle Shannon	Pittsburgh and Castle Shannon	7		6	189 00		27 00	
8098	Newcastle to Stoneborough	Newcastle and Franklin	36.5		6	1,642 50		45 00	
8099	White Haven to Upper Lehigh	Central Railroad Company of New Jersey.	9.82		6	441 90		45 00	Pay estimated.
8100	Norristown to Lansdale	Stony Creek	10.9		6	490 50		45 00	Do.
8101	Osceola Mills to Ramey	Pennsylvania	9.06		6	407 70		45 00	Do.
8102	Tamaqua to Mauch Chunk	Central Railroad Company of New Jersey.	16.7		6	751 50		45 00	Do.
8103	Wilkesbarre to Wanamie	do	11.55		6	519 75		45 00	
8104	Hanover Junction to Hanover	Hanover Branch	13		12	585 00		45 00	
8105	Jenkintown to Boundbrook, N. J.	Delaware and Boundbrook	49.1		6	2,209 50		45 00	Pay estimated.
8106	Millersburgh to Williamstown	Summit Branch	21.09		6	949 05		45 00	Do.
8107	Southwest Junction to Uniontown	Pennsylvania	37.38		6	1,682 10		45 00	Do.
8108	Emlenton to Knox	Emlenton and Shippensville	15.2		6	684 00		45 00	Do.
8109	Tioga Junction to Elmira, N. Y.	Tioga and Elmira State Line	23		6	1,035 00		45 00	Do.
8110	Lewistown Junction to Selin's Grove Junction.	Pennsylvania, lessee of Sunbury and Lewistown Railroad.	45		6	2,025 00		45 00	Do.
				4,741.89			589,030 62		
	DELAWARE.								
9501	Wilmington to Delmar	Philadelphia, Wilmington and Baltimore.	84		12	13,333 95		141 30	
			13.02		12			112 50	
9502	Delmar to Crisfield, Md	Eastern Shore	38		6	2,223 00		58 50	
9503	Clayton to Easton, Md	Maryland and Delaware	44		6	2,376 00		54 00	
9504	Harrington to Lewes	Junction and Breakwater	40		6	1,800 00		45 00	
9505	Wilmington to Landenburgh, Pa.	Wilmington and Western	19.53		6	703 08		36 00	
9506	Georgetown to Selbyville	Breakwater and Frankford	19.3		6	868 50		45 00	
				257.85			21,304 53		

	MARYLAND.								
10001	Baltimore to Philadelphia, Pa. Branch, Perryville to Port Deposit.	Philadelphia, Wilmington and Baltimore.	96 4		28⅔ 6	47,498 40		492 90 45 00	
10002	Baltimore to Sunbury, Pa	Northern Central	140.7		18	26,184 27		186 10	
10003	Baltimore to Wheeling, W. Va.	Baltimore and Ohio	294 99		27¾ 27¾	129,699 30		340 10 300 10	
10004	Araby to Frederick	do	3		12	270 00		90 00	
10005	Weverton to Hagerstown	do	24.25		12	1,156 72		47 70	
10006	Baltimore to Williamsport	Western Maryland	91.62		12	6,184 35		67 50	
10007	Annapolis to Annapolis Junction	Annapolis and Elk Ridge	20.5		12	1,383 75		67 50	
10008	Cambridge to Seaford, Del	Dorchester and Delaware	33.5		6	1,507 50		45 00	
10009	Salisbury to Ocean City	Wicomico and Pocomoke	30.5		6	1,372 50		45 00	
10010	Townsend, Del., to Centreville, Md.	Queen Anne and Kent	36		6	1,620 00		45 00	
10011	Cumberland to Piedmont, W. Va.	Cumberland and Pennsylvania	34		6	1,530 00		45 00	
10012	Clayton, Del., to Chestertown, Md	Kent County	30.8		6	1,580 04		51 30	
10013	Bay View to Washington, D. C.	Baltimore and Potomac	46.1		29	18,158 79		393 90	
10014	Bowie to Pope's Creek	do	48.68		6	2,190 60		45 00	
10015	Newtown Junction to Newtown	Worcester and Somerset	9		6	405 00		45 00	
10016	Selbyville, Del., to Franklin City, Va.	Worcester	35.24		6	1,585 80		45 00	Pay on 3.8 miles estimated.
10017	Saint Denis to Point of Rocks	Baltimore and Ohio	60		6	5,400 00		90 00	
10018	Lake Roland to Western Maryland Railroad Junction.	Northern Central	8.5		6	306 00		36 00	
10019	Emmittsburgh to Rocky Ridge	Emmittsburg	7		12	315 00		45 00	
				1,152.39			248,348 02		
	WEST VIRGINIA.								
12001	Harper's Ferry to Staunton, Va.	Baltimore and Ohio	126.53		6	9,451 79		74 70	
12002	Grafton to Parkersburg	do	104.58		14	25,737 13		246 10	
12004	Laurel Junction to Volcano	Laurel Fork and Sand Hill	10.009		18	360 00		36 00	
12005	Pennsborough to Ritchie C. H.	Pennsborough and Harrisville	9		6	405 00		45 00	
				250.119			35,953 92		
	VIRGINIA.								
11001	Washington, D. C., to Richmond, Va.	Richmond, Fredericksburgh and Potomac.	131		13	38,448 50		243 50	$6,550 per annum included for railway post-office cars.
11002	Alexandria to Lynchburgh Branch, Owl Run to Warrenton	Washington City, Virginia Midland and Great Southern.	170.82 9		13 6	43,537 05		227 50 45 00	$4,270.50 per annum included for railway post-office cars.
11003	Manassas to Strasburgh	do	62.55		6	2,871 00		45 90	
11004	Alexandria to Round Hill	Washington and Ohio	52.74		6	2,515 70		47 70	
11005	Richmond to Huntington, W. Va.	Chesapeake and Ohio	272.75 148.39		12 12	30,773 56		81 00 58 50	
11006	Richmond to Greensborough, N. C.	Richmond and Danville	189.58		16	29,005 74		153 00	
11007	Richmond to West Point	Richmond, York River and Chesapeake.	39.84		6	1,792 80		45 00	

B.—*Railroad-service as in operation on the 30th of June, 1877*—Continued.

Number of route.	State and termini.	Corporate title of company carrying the mail.	Distance.	Total distance in each State.	Number of trips per week.	Annual pay.	Annual pay in each State.	Annual cost per mile on each route.	Remarks.
	VIRGINIA—Continued.		*Miles.*	*Miles.*		*Dollars.*	*Dollars.*	*Dollars.*	
11008	Richmond to Petersburgh	Richmond and Petersburgh	24.07		14	5,296 16		163 80	$1,203.50 per annum for railway post-office cars, and $150 per annum for mail-messenger service, included.
11009	Petersburgh to Weldon, N. C	Petersburgh	65.51		14	10,796 04		164 80	
11010	Petersburgh to City Point	Atlantic, Mississippi and Ohio	10.75		6	483 75		45 00	
11011	Petersburgh to Norfolk	do	82.4		6	4,449 60		54 00	
11012	Petersburgh to Lynchburgh	do	123.75		6	7,239 37		58 50	
11013	Lynchburgh to Bristol, Tenn	do	205		14	49,917 50		218 50	$5,125 per annum included for railway post-office cars.
11014	Glade Spring to Saltville	do	9.5		6	256 50		27 00	
11015	Portsmouth to Weldon, N. C	Seaboard and Roanoke	79.26		6	4,208 70		53 10	
11016	Lynchburgh to Danville	Washington City, Virginia Midland and Great Southern.	66.34		6	2,985 30		45 00	
11017	Chester to Winterpock	Clover Hill	18.5		6	333 00		18 00	
11018	Washington to Alexandria	Alexandria and Washington	7		13	1,575 00		225 00	
11020	Fredericksburgh to Orange C. H.	Royal Land Company	38.25		6	1,721 25		45 00	Pay estimated.
				1807			238,206 52		
	NORTH CAROLINA.								
13001	Raleigh to Weldon, N. C	Raleigh and Gaston	97		6	5,761 80		59 40	
13002	Weldon to Wilmington Branch, Rocky Mount to Tarborough.	Wilmington and Weldon	163.07 19.79		13 7	27,014 36		160 20 45 00	
13003	Wilmington to Charlotte	Carolina Central	195.9		13	9,697 05		49 50	
13004	Goldsborough to Greensborough Greensborough to Charlotte	Richmond and Danville	130.35 93		7 7	19,847 02		67 50 118 80	
13005	Goldsborough to Morehead City	Atlantic and North Carolina	94.04		6	4,993 53		53 10	
13006	Salisbury to Henry's	Western North Carolina	117.31		6	6,123 58		52 20	
13007	Charlotte to Augusta, Ga	Charlotte, Columbia and Augusta	195.75		10½	20,260 13		103 50	
13008	Charlotte to Shelby	Carolina Central	55.25		6	2,486 25		45 00	
13009	Charlotte to Statesville	Atlantic, Tennessee and Ohio	49.38		6	1,999 89		40 50	
13010	Raleigh to Cameron	Raleigh and Augusta Air Line	58.78		6	2,645 10		45 00	

13011	Fayetteville to Sanford	Western	38.53		6	2,003 85		45 00
	Branch, Sanford to Egypt Depot		6		6			
13012	Greensborough to Salem	Northwestern North Carolina	29.31		6	1,503 60		51 30
				1,344.46			104,336 16	
	SOUTH CAROLINA.							
14001	Columbia to Greenville C. H	Greenville and Columbia	144.01		6	9,017 66		55 80
	Branch, Hodges to Abbeville C. H.		11.81		6			45 00
	Branch, Belton to Anderson C. H.		10.01		6			45 00
14002	Columbia to Florence	Wilmington, Columbia & Augusta	82.08		7	22,938 93		81 00
	Florence to Wilmington, N. C.		109.7		13			148 50
14003	Kingsville to Augusta, Ga	South Carolina	118		13	14,900 63		63 00
	Branch, Kingsville to Camden		39.25		6			40 50
	Branch, Kingsville to Columbia		25.7		13			63 00
	Branch, Branchville to Charleston.		62.25		20			68 40
14004	Charleston to Savannah, Ga	Savannah and Charleston	110		13	12,870 00		117 00
14005	Charleston to Florence	Northeastern	103		13	13,905 00		135 00
14006	Florence to Cheraw	Cheraw and Darlington	40.88		6	1,829 60		45 00
14007	Chester to Dallas	Chester and Lenoir Narrow-Gauge	49.93		6	2,246 85		45 00
14008	Alston to Spartanburgh C. H	Spartanburgh and Union	68.12		6	3,065 40		45 00
14009	Anderson C. H. to Walhalla	Greenville and Columbia	35.06		6	1,577 70		45 00
14010	Port Royal to Augusta, Ga	Port Royal	112.2		6	5,755 86		51 30
				1,122			88,117 63	
	GEORGIA.							
15001	Atlanta to Charlotte, N. C	Atlanta and Richmond Air-Line	266.5		7	21,586 50		81 00
15002	Atlanta to Chattanooga, Tenn	Western and Atlantic	138.47		14	23,775 29		171 70
15003	Atlanta to West Point	Atlanta and West Point	86.68		14	12,169 88		140 40
15004	Augusta to Atlanta	Georgia	171.62		12	24,507 33		142 80
15005	Millen to Augusta	Central Railroad and Banking Company.	53.125		14	3,538 12		66 60
15006	Washington to Double Wells	Georgia	18.86		6	848 70		45 00
15007	Union Point to Athens	do	39.92		6	2,227 54		55 80
15008	Kingston to Rome	Rome	20.35		7	915 75		45 00
15009	Savannah to Live Oak, Fla	Atlantic and Gulf	179.2		13	26,075 61		118 80
	Branch, Du Pont to Bainbridge		106.37		7			45 00
15010	Savannah to Macon	Central Railroad and Banking Company.	192.125		14	13,660 08		71 10
15011	Macon to Columbus	Southwestern	100.94		13	6,995 14		69 30
15012	Macon to Atlanta	Central Railroad and Banking Company.	103.52		13	10,527 98		101 70
15013	Macon to Brunswick	Macon and Brunswick	188		6	12,880 80		66 60
	Branch, Cochran to Hawkinsville.		10		6			36 00
15014	Gordon to Milledgeville	Central Railroad and Banking Company.	18.25		6	821 25		45 00

B.—*Railroad-service as in operation on the 30th of June*, 1877—Continued.

Number of route.	State and termini.	Corporate title of company carrying the mail.	Distance.	Total distance in each State.	Number of trips per week.	Annual pay.	Annual pay in each State.	Annual cost per mile on each route.	Remarks.
	GEORGIA—Continued.		*Miles.*	*Miles.*		*Dollars.*	*Dollars.*	*Dollars.*	
15015	Eatonton to Milledgeville	Central Railroad and Banking Company.	22.125		6	995 63		45 00	
15016	Macon to Eufaula, Ala Branch, Smithville to Albany Branch, Cuthbert to Fort Gaines Branch, Albany to Arlington	Southwestern	144.84 23.78 22.67 35.5		6 5 6 5	12,781 17		67 50 45 00 36 00 31 50	
15017	Fort Valley to Perry	do	13.32		6	479 52		36 00	
15018	Thomasville to Albany	Atlantic and Gulf	58.91		7	2,650 95		45 00	
15019	Barnesville to Thomaston	Central Railroad and Banking Company.	17.25		6	621 00		36 00	
15020	Cartersville to Rock Mart	Cherokee	22.08		6	596 16		27 00	
15021	Camak to Macon	Macon and Augusta	80.66		6	4,355 64		54 00	
15022	Griffin to Carrollton	Savannah, Griffin and North Alabama.	59.86		6	2,424 33		40 50	
15023	Brunswick to Albany	Brunswick and Albany	173.31		3	4,679 37		27 00	
15024	Columbus to Hamilton	North and South	23.51		6	740 57		31 50	
15025	Athens to Bellton	Northeastern Railroad Company of Georgia.	40.53		6	1,823 85		45 00	Pay estimated.
				2,432.275			192,678 16		
	FLORIDA.								
16001	Fernandina to Cedar Keys	Atlantic, Gulf and West India Transit Company.	154.8		6	5,572 80		36 00	
16002	Jacksonville to Chattahoochee River. Branch, Tallahassee to Saint Marks.	Jacksonville, Pensacola and Mobile.	213.52 21.89		11½ 3	12,692 77		57 60 18 00	
16003	Pensacola to Whiting Junction, Ala.	Pensacola and Louisville	44.05		13	1,902 96		43 20	
16004	Tocoi to Saint Augustine	Saint Johns	15.69		6	706 05		45 00	
16005	Pensacola to Millview	Pensacola and Perdido	10.625		6	286 88		27 00	
				460.575			21,161 46		
	ALABAMA.								
17001	Montgomery to West Point, Ga	Western Railroad Company of Alabama.	88.5		14	12,186 45		137 70	

17002	Montgomery to Selma	do	50		7	2,250 00		45 00	
17003	Montgomery to Eufaula	Montgomery and Eufaula	81.24		7½	3,728 91		45 90	
17004	Montgomery to Decatur	South and North Alabama	182.85		14	16,193 19		88 56	
17005	Memphis, Tenn., to Stevenson, Ala.	Memphis and Charleston	271.5		14	27,823 50		99 00	
	Branch, Moscow to Somerville		14.5		7			45 00	
	Branch, Tuscumbia to Florence		6.5		7			45 00	
17006	Marion Junction to Greensborough.	Selma, Marion and Memphis	37.25		6	1,676 25		45 00	
17007	Opelika to Columbus, Ga	Western Railroad Company of Alabama.	28		14	1,764 00		63 00	
17008	Columbus, Ga., to Troy, Ala	Mobile and Girard	90		6	3,628 80		40 32	
17009	Selma to Meridian, Miss	Alabama Central	108.2		7	6,521 46		60 30	
17010	Selma to Dalton, Ga	Selma, Rome and Dalton	237.5		7	12,825 00		54 00	
17011	Gainesville to Gainesville Junction.	Mobile and Ohio	22		7	891 00		40 50	
17012	Mobile to Montgomery	Mobile and Montgomery	67		14	22,127 58		141 30	
			112		14			113 04	
17013	Mobile to New Orleans, La	New Orleans, Mobile and Texas	140		14	21,798 00		155 70	
17014	Opelika to Buffalo	East Alabama and Cincinnati	22.5		6	810 00		36 00	
17015	Chattanooga, Tenn., to Meridian, Miss.	Alabama and Chattanooga	24.5		7	10,840 50		45 00	
			270.5		7			36 00	
17016	Opelika to Good Water	Savannah and Memphis	59.65		6	2,415 83		40 50	
17017	Selma to Pine Apple	Selma and Gulf	43.19		4	1,749 20		40 50	
17018	Mobile to Bigbee Bridge	Mobile and Alabama Grand Trunk	59.7		6	1,821 90		27 00	$210 per annum included for mail-messenger service.
17019	Chehaw to Tuskegee	Tuskegee	6		14	270 00		45 00	
17020	Atalla to Gadsden	East Alabama and Cincinnati	6		6	270 00		45 00	
17021	Eufaula to Clayton	Vicksburgh and Brunswick	22.5		6	810 00		36 00	
17022	Selma to Martin's Station	Selma and New Orleans	20.5		3	553 50		27 00	Six trips a week for a portion of the year.
				2,072.08			152,958 07		
	MISSISSIPPI.								
18001	Canton to Cairo, Ill	New Orleans, Saint Louis and Chicago.	342.98		7	44,141 52		128 70	
18002	Memphis, Tenn., to Grenada, Miss	Mississippi and Tennessee	101.7		10	6,681 69		65 70	
18003	Vicksburgh to Meridian	Vicksburgh and Meridian	45.5		7	8,072 31		81 00	
			95.2		7			46 08	
18004	Mobile, Ala., to Columbus, Ky.	Mobile and Ohio	472.7		7	28,219 77		57 60	
	Branch, Artesia to Columbus, Miss.		14		7			45 00	
	Branch, Artesia to Starkville		11.5		6			31 50	
18006	Grand Gulf to Port Gibson	Grand Gulf and Port Gibson	8		6	560 00		45 00	$200 per annum included for mail-messenger service.
18007	Muldon to Aberdeen	Mobile and Ohio	9		7	324 00		36 00	
18008	Middleton Station, Tenn., to Ripley, Miss.	Southern Railway Security Company.	24.3		6	874 80		36 00	
18009	Durant to Kosciusko	New Orleans, Saint Louis and Chicago, operating Mississippi Central.	21.57		6	776 52		36 00	
				1,146.45			89,650 61		

B—*Railroad-service as in operation on the 30th of June*, 1877—Continued.

Number of route.	State and termini.	Corporate title of company carrying the mail.	Distance.	Total distance in each State.	Number of trips per week.	Annual pay.	Annual pay in each State.	Annual cost per mile on each route.	Remarks.
	LOUISIANA.		*Miles.*	*Miles.*		*Dollars.*	*Dollars.*	*Dollars.*	
30001	New Orleans to Canton, Miss	New Orleans, Saint Louis and Chicago.	206		13	28,922 40		140 40	
30002	New Orleans to Donaldsonville	New Orleans and Texas	63.66		6	2,864 70		45 00	
30003	New Orleans to Morgan City	Morgan's Louisiana and Texas Railroad.	83		7	7,624 00		88 00	$320 per annum included for side-supply.
30004	Terre Bonne to Houma	do	15.28		7	764 00		50 00	
30005	Baton Rouge to Livonia	Baton Rouge, Grosse Tête and Opelousas.	28		3	504 00		18 00	
30006	Clinton to Port Hudson	Clinton and Port Hudson	21		3	567 00		27 00	
30007	Saint Francisville to Woodville, Miss.	West Feliciana	27.57		3	964 95		35 00	
30008	Vicksburgh, Miss., to Monroe, La	Vicksburgh, Shreveport and Texas	75.5	520.01	7	3,172 36	45,383 41	36 72	$400 per annum included for ferriage and mail-messenger service.
	TEXAS.								
31001	Houston to Galveston	Galveston, Houston and Henderson.	50		19	7,250 00		145 00	
31002	Harrisburgh to San Antonio	Galveston, Harrisburgh and San Antonio.	214.7		12	16,231 32		75 60	Pay estimated on 59.5 miles.
31003	Houston to Denison City	Houston and Texas Central	155 182.55		12 6	42,227 50		125 10	
31004	Hempstead to Austin	do	118.7		12	11,110 32		93 60	
31005	Bremond to Waco	do	44.56		9	3,248.42		79 90	
31006	Longview to Houston Branch, Mineola to Zavala Branch, Phelps to Huntsville	International and Great Northern	236 44.125 8.5		6 6 6	34,491 25		135 00 50 00 50 00	
31007	Palestine to Austin	do	183.84		6	9,192 00		50 00	Pay estimated on 62.84 miles.
31008	Houston to Columbia	do	50		2	1,250 00		25 00	
31009	Shreveport, La., to Fort Worth, Tex	Texas and Pacific	40 179.08		12 6	19,717 20		90 00	Pay estimated on 29.88 miles.
31010	Marshall to Texarkana, Ark	do	74		6	11,100 00		150 00	
31011	Sherman to Texarkana, Ark	do	154.97		6	7,903 47		51 00	Pay estimated on 97.97 miles.
31013	Houston to Orange	Texas and New Orleans	106.84		3	4,807 80		45 00	Pay estimated.
				1,842 865			168,529 28		

	ARKANSAS.								
29001	Memphis, Tenn., to Argenta, Ark	Memphis and Little Rock	134	.....	7	10,130 40	.....	75 60	
29002	Helena to Clarendon	Arkansas Central	48.9	.....	6	1,952 10	.....	40 50	
29005	Argenta to Fort Smith	Little Rock and Fort Smith	169.29	.....	6	10,360 54	.....	61 20	Pay estimated on 43.65 miles.
29006	Malvern to Hot Springs	Hot Springs	25.11	.....	6	1,378 53	.....	54 90	
29007	Pine Bluff to Watson	Little Rock, Mississippi River and Texas.	50	.....	6	2,250 00	.....	45 00	Pay estimated.
				426.6			26,071 57		
	MISSOURI.								
28001	Saint Louis to Atchison, Kans	Missouri Pacific	37 292.75	....	13⅝ 13¼	66,952 09	.....	166 16 207 70	
28002	Saint Louis, to Columbus, Ky Branch, Mineral Point to Potosi	Saint Louis, Iron Mountain and Southern.	197 4	....	13 6	28,568 00	.....	144 00 50 00	
28003	Pacific to Vinita, Ind. T	Atlantic and Pacific	327.25	.....	6	27,096 30	.....	82 80	
28004	Saint Louis to Kansas City	Saint Louis, Kansas City and Northern.	276.56	.....	14¾	38,580 12	.....	139 50	
28005	Quincy, Ill., to Saint Joseph, Mo. Branch, Palmyra to Hannibal	Hanibal and Saint Joseph	171 32.5 15	....	13 7 13	39,022 00	.....	192 00 172 00 40 00	
28006	Kansas City to Union Pacific Transfer.	Kansas City, Saint Joseph and Council Bluffs.	203.5	.....	14	27,289 35	.....	134 10	
28007	Moberly to Ottumwa, Iowa	Saint Louis, Kansas City and Northern.	131	.....	6	9,432 00	.....	72 00	
28008	Tipton to Boonville	Atlantic and Pacific	25	.....	6	1,147 50	.....	45 90	
28009	Centralia to Columbia	Saint Louis, Kansas City and Northern.	22	.....	6	990 00	.....	45 00	
28010	Kansas City to Cameron	Hannibal and Saint Joseph	54	.....	13	13,636 00	.....	239 00	$730 per annum included for ferriage.
28011	Sedalia to Denison City, Tex	Missouri, Kansas and Texas	158.5 265 23.5	....	13 7 7	70,504 95	.....	166 70 155 00 128 00	
28012	Saint Joseph to Lexington	Saint Louis, Kansas City and Northern.	76.75	.....	7	3,522 82	.....	45 90	
28013	Brunswick to Pattonsburgh	Brunswick and Chillicothe and Saint Louis, Council Bluffs and Omaha.	80.05	.....	6	4,106 57	.....	51 30	
28014	Hannibal to Sedalia	Missouri, Kansas and Texas	142.88	.....	13	22,403 58	.....	156 80	
28015	Alexandria to Centreville, Iowa	Missouri, Iowa and Nebraska	85.63	.....	6	4,281 50	.....	50 00	
28016	Pleasant Hill to De Soto	Saint Louis, Lawrence and Western	46.8	.....	6	2,340 00	.....	50 00	Pay estimated.
28017	Sedalia to Lexington	Atlantic and Pacific	56.25	.....	6	2,531 25	.....	45 00	
28018	Keokuk, Iowa, to Clarksville, Mo	Saint Louis, Keokuk and Northwestern.	60.72 35.48	....	6 6	6,948 90	*	75 00 67 50	Pay on 9.4 miles estimated.
28019	Quincy, Ill., to Kirksville, Mo	Quincy, Missouri and Pacific	71.28	.....	12	4,134 24	.....	58 00	
28020	Pierce City to Oswego, Kans	Missouri and Western	26.37 47.39	....	13 7	3,319 20	.....	45 00	
28021	Mexico to Cedar City	Chicago and Alton	50.62	.....	6	2,277 90	.....	45 00	
28022	Road House, Ill., to Mexico, Mo	.....do	90	.....	12	11,655 00	.....	112 50	$1,530 per annum included for railway post-office cars.
28023	Cuba to Salem	Saint Louis, Salem and Little Rock	40.88	.....	6	1,839 60	.....	45 00	

B.—*Railroad-service as in operation on the 30th of June*, 1877—Continued.

Number of route.	State and termini.	Corporate title of company carrying the mails.	Distance.	Total distance in each State.	Number of trips per week.	Annual pay.	Annual pay in each State.	Annual cost per mile on each route.	Remarks.
	MISSOURI—Continued.		*Miles.*	*Miles.*		*Dollars.*	*Dollars.*	*Dollars.*	
28024	Holden to Paola	Missouri, Kansas and Texas	55		6	2,750 00		50 00	
28025	Salisbury to Glasgow	Saint Louis, Kansas City and Northern.	15.66		12	704 70		45 00	
28026	Bismarck to Texarkana, Ark	Saint Louis, Iron Mountain and Southern.	90.24 324.01		7 7	50,146 71		155 00 111 60	
28027	Cairo, Ill., to Poplar Bluff, Mo	do	73.73		6	2,654 28		36 00	
28028	Saint Joseph to Hopkins	Kansas City, Saint Joseph and Council Bluffs.	61.5		6	3,874 50		63 00	
28030	Saint Joseph to Atchison, Kans	Hannibal and Saint Joseph	22.08		13	1,987 20		90 00	
28031	Saint Louis to Normandy	West End Narrow Gauge	10.53		6	331 69		31 50	
28032	Atchison, Kans., to Edgerton Junction, Mo.	Chicago, Rock Island and Pacific	30		6	2,700 00		90 00	Pay estimated.
28033	Kansas City to Lexington	Wyandotte, Kansas City and Northwestern.	43.35		6	2,167 50		50 00	Do.
				3,872.76			459,895 45		
	TENNESSEE.								
19001	Nashville to Lebanon	Tennessee and Pacific	32.75		6	1,473 75		45 00	
19002	Bristol to Chattanooga Branch, Cleveland to Dalton	East Tennessee, Virginia and Georgia.	242.7 28.5		14 7	49,887 69		189 70 135 00	
19003	Rogersville to Bull's Gap	W. P. Elliott, owner of Rogersville and Jefferson Railroad.	15		6	715 00		45 00	$40 per annum included for mail-messenger service.
19004	Nashville to Chattanooga Branch, Wartrace Depot to Shelbyville.	Nashville and Chattanooga	114 39 8		13 20 7	23,355 90		150 30 150 30 45 00	
19005	Fayetteville to Decherd	Nashville, Chattanooga and Saint Louis.	40		6	1,800 00		45 00	
19006	Nashville to Decatur, Ala	Louisville and Nashville	47 75.333		12 12	13,092 60		117 00 100 80	
19007	Nashville to Hickman, Ky	Nashville and Chattanooga	155 15.82		13 7	13,221 47		77 40	
19010	Memphis to Paris	Louisville and Nashville	115.2 17.3		20 13	21,110 85			69 miles, at $135. 43.5 miles, at $209.10.
19011	Knoxville to Caryville	Knoxville and Ohio	38.94		6	1,577 07		40 50	
19012	Morristown to Wolf Creek	East Tennessee, Virginia and Georgia.	39.8		6	1,432 80		36 00	

19013	Tracy City to Cowan	Tennessee Coal and Railroad Company.	23		6	828 00		36 00	
19014	Memphis to Covington	Paducah and Memphis	38.31		6	1,379 16		36 00	
19015	Jasper to Bridgeport, Ala	Nashville and Chattanooga	12		6	324 00		27 00	
19016	Tullahoma to McMinnville	Nashville, Chattanooga and Saint Louis	35		6	1,575 00		45 00	Pay estimated.
19017	Knoxville to Maryville	Knoxville and Charleston	16.27		6	658 94		40 50	
19018	Columbia to Lewisburgh	Duck River Valley	20.23		6	910 35		45 00	Pay estimated.
				1,169.153			133,342 58		
	KENTUCKY.								
20001	Ashland to Geigersville	Lexington and Big Sandy	13.98		6	377 46		27 00	
20002	Covington to Nicholasville	Kentucky Central	99 13		12 6	11,309 40		106 20 61 20	
20003	La Grange to Lexington	Louisville, Cincinnati and Lexington.	67		12	5,246 10		78 30	
20004	Cincinnati, Ohio, to Louisville, Ky	do	110.375		18	22,847 63		207 00	
20005	Louisville to Nashville, Tenn	Louisville and Nashville	113.5 73.1		14 7	49,644 48		277 80 247 80	
20006	Bardstown Junction to Bardstown.	do	17.3		7	700 65		40 50	
20007	Lebanon Junction to Fish Point Branch, Richmond Junction to Richmond.	do	76.4 33.5 33.8		6 6 6	8,506 89		69 30 40 50 54 90	
20008	Bowling Green to Paris	Louisville and Nashville	134.08		13	28,156 80		210 00	
20009	Paducah to Trimble, Tenn	Paducah and Memphis	50 26.64		12 6	3,448 80		45 00	
20011	Elizabethtown to Paducah	Paducah and Elizabethtown	186.19		6	12,567 83		67 50	
20012	Glasgow Junction to Glasgow	Louisville and Nashville	12		10½	540 00		45 00	
20013	Anchorage to Shelbyville	Shelby	19		12	855 00		45 00	
20014	Willard to Greenup	Eastern Kentucky	34.5		6	1,242 00		36 00	
20015	Owensborough to Owensborough Junction.	Evansville, Owensborough and Nashville.	36.13		6	1,625 85		45 00	
20016	Maysville to Paris	Maysville and Lexington	50		6	2,970 00		59 40	
20017	Lexington to Mount Sterling	Louisville Cincinnati and Lexington.	33.84		12	1,644 63		48 60	
20018	Cincinnati Junction to Louisville and Nashville Junction.	do	4.13		12	676 50		163 80	
20019	Louisville to Cecilian	Louisville and Nashville	47.58		6	1,926 99		40 50	
				1,285.045			154,287 01		
	OHIO.								
21001	Bellaire to Columbus	Central Ohio	104.875 33		20 13	25,750 78		220 90 78 30	
21002	Pittsburgh, Pa., to Chicago, Ill	Pittsburgh, Fort Wayne, and Chicago.	469.5		29⅝	103,947 30		221 40	
21003	Pittsburgh, Pa., to Bellaire, Ohio	Cleveland and Pittsburgh	94.5		18	11,056 50		117 00	
21004	Hudson to Columbus	Cleveland, Mount Vernon and Delaware.	61 40 44.88		12 6 12	11,159 82		76 50	

B.—*Railroad-service as in operation on the 30th of June*, 1877—Continued.

Number of route.	State and termini.	Corporate title of company carrying the mail.	Distance.	Total distance in each State.	Number of trips per week.	Annual pay.	Annual pay in each State.	Annual cost per mile on each route.	Remarks.
	Ohio—Continued.		*Miles.*	*Miles.*		*Dollars.*	*Dollars.*	*Dollars.*	
21005	Cleveland to Sharpsville, Pa	Atlantic and Great Western	84.4		10½	6,988 32		82 80	
21006	Cleveland to Wellsville	Cleveland and Pittsburgh	56.5 45.86		12 12	14,279 22		139 50	
21007	Elyria to Millbury	Lake Shore and Michigan Southern	74.98		19	27,294 21		364 02	
21008	Bayard to New Philadelphia	Cleveland and Pittsburgh	32.5		6	1,755 00		54 00	
21009	Minerva to Leavitt	Ohio and Toledo	22.22		6	999 90		45 00	Pay estimated.
21010	Sandusky to Newark	Baltimore and Ohio, lessee of Sandusky, Mansfield and Newark.	28 88		18 18	21,948 40		58 50 230 80	
21011	Xenia to Dayton	Pittsburgh, Cincinnati and Saint Louis.	17		18	979 20		57 60	
21012	Springfield to Sandusky	Cincinnati, Sandusky and Cleveland.	130.35		12	10,343 80		78 75	
21013	Columbus to Delaware	Cleveland, Columbus, Cincinnati and Indianapolis.	24.75		6	2,227 50		90 00	
21014	Columbus to Xenia	Columbus and Xenia	55		13	20,152 00		366 40	
2.015	Columbus to Indianapolis, Ind	Columbus, Chicago and Indiana Central.	188		20	76,647 60		407 70	
21016	Galion to Indianapolis, Ind	Cleveland, Columbus, Cincinnati and Indianapolis.	119.4 84.6		13 19	38,148 00		187 00	
21017	Blanchester to Hillsborough	Marietta and Cincinnati	21		12	963 90		45 90	
21018	Portsmouth to Hamden Junction	do	56		12	4,636 80		82 80	
21019	Toledo to Quincy, Ill Branch, Bluffs to Naples Branch, Clayton to Keokuk	Wabash	476 4 44		12 12 12	118,130 00		242 50 81 00 54 00	
21020	Fremont to Saint Mary's	Lake Erie and Louisville	89.35		6	4,262 00		47 70	
21021	Carey to Findlay	Cincinnati, Sandusky and Cleveland.	16		12	720 00		45 00	
21022	Dayton to Union City	Dayton and Union	48.17		12	2,384 42		49 50	
21023	Dayton to Toledo	Dayton and Michigan	142.96		16½	16,469 00		115 20	
21024	Hamilton to Indianapolis, Ind	Cincinnati, Hamilton and Indianapolis.	99.49		15½	5,730 62		57 60	
21025	Hamilton to Richmond, Ind	Cincinnati, Richmond, and Chicago.	45.1		12	3,653 10		81 00	
21026	Cincinnati to Dayton	Cincinnati, Hamilton and Dayton	26.53 33.92		58½ 27	8,877 06		102 00 135 00	

21027	Cincinnati to Springfield	Pittsburgh, Cincinnati, and Saint Louis.	65.96 19		20 12	25,092 74		366 40 45 00	
21028	Cincinnati to Parkersburgh, W. Va	Marietta and Cincinnati	195.15		14	46,621 33		238 90	
21029	Morrow to Dresden	Pittsburgh, Cincinnati and Saint Louis.	149.4		6¾	8,470 98		56 70	
21030	Dayton to Richmond, Ind	do	42		12	2,154 60		51 30	
21031	North Bend to Hagerstown, Ind	Indianapolis, Cincinnati and La Fayette, lessee of White Water Valley.	72.58		6	4,507 22		62 10	
21032	Columbus to Pittsburgh Pa Branch, Means to Cadiz	Pittsburgh, Cincinnati, and Saint Louis.	193 8		20 12	125,790 70		649 90 45 00	
21033	Springfield to Columbus	Cincinnati Sandusky and Cleveland.	45.86		6	2,146 24		46 80	
21034	Salamanca, N. Y., to Dayton, Ohio	Atlantic and Great Western	389.55		16	32,955 93		84 60	
21035	Youngstown to Cross Cut	Pittsburgh, Fort Wayne and Chicago.	22.8		6	1,025 00		45 00	
21036	Columbus to Athens Branch, Logan to New Straitsville.	Columbus and Hocking Valley	77.4 13.02		15 15	5,333 85		62 10 40 50	
21037	Niles to New Lisbon	Atlantic and Great Western	33.94		6	1,618 94		47 70	
21038	Newark to Shawnee	Newark, Somerset and Straitsville.	44.045		12	1,785 62		36 00	
21039	Clinton to Massillon	Cleveland, Mount Vernon and Delaware.	13.7		6	493 20		36 00	
21040	Marietta to Canal Dover	Marietta and Pittsburgh	90.96		6	4,858 05		48 60	
21041	Lorain to Ubricksville	Cleveland, Tuscarawas Valley and Wheeling.	102.45		6⅔	6,915 38		67 50	
21042	Cleveland to Cincinnati	Cleveland, Columbus, Cincinnati and Indianapolis.	80 165.25		19 19	54,704 22		239 90 214 90	
21043	Mansfield to Toledo	Pennsylvania Company	88.1		12	5,788 17		65 70	
21044	Harbor to Youngstown	do	62.1		7½	2,794 50		45 00	
21045	Toledo to Elkhart, Ind	Lake Shore and Michigan Southern	133.6		12	74,842 72		560 20	
21046	Painesville to Youngstown	Painesville and Youngstown	60.12		6	2,813 62		46 80	
21047	Chicago, Ohio, to Chicago, Ill	Baltimore and Ohio, operating Baltimore, Pittsburgh and Chicago.	271.53		13	69,022 92		254 20	
21048	Dyson's to Cumberland	Eastern Ohio	7.8		12	351 00		45 00	
21049	Marietta to Parkersburgh, W. Va	Marietta and Cincinnati	15.87		26	1,028 37		64 80	
21050	Athens to Scott's Landing	do	37		6	1,498 50		40 50	
21051	Columbus to Chillicothe	Scioto Valley	51.76		6	2,562 12		49 50	
21052	Little Miami Railroad Junction to Sardinia.	Cincinnati and Eastern	37.99		6	1,709 55		45 00	Pay estimated.
31053	Columbus to Toledo	Columbus and Toledo	125.23		6	5,635 35		45 00	Do.
25054	Xenia to Washington C. H	Dayton and Southeastern	31.15		6	1,401 75		45 00	Do.
				5,758 15			1,033,158 02		
	INDIANA.								
22001	Indianapolis to Vincennes	Indianapolis and Vincennes	116.32		6	6,595 35		56 70	
22002	Indianapolis to Terre Haute	Terre Haute and Indianapolis	73		22	19,345 00		265 00	
22003	Indianapolis to Cincinnati, Ohio	Indianapolis, Cincinnati and La Fayette.	113.5		18	33,936 50		299 00	
22004	Indianapolis to Peru	Indianapolis, Peru and Chicago	78		20½	6,356 40		73 80	$600 per annum included for side-service.

B.—*Railroad-service as in operation on the 30th of June*, 1877—Continued.

Number of route.	State and termini.	Corporate title of company carrying the mail.	Distance.	Total distance in each State.	Number of trips per week.	Annual pay.	Annual pay in each State.	Annual cost per mile on each route.	Remarks.
	INDIANA—Continued.		*Miles.*	*Miles.*		*Dollars.*	*Dollars.*	*Dollars.*	
22005	Indianapolis to La Fayette	Indianapolis, Cincinnati and La Fayette.	65.625		22	20,389 68		310 70	
22006	Columbus to Madison	Jeffersonville, Madison and Indianapolis.	46		12	2,525 40		54 90	
22007	New Albany to Indianapolis	do	114		19	15,082 20		132 30	
22008	New Albany to Michigan City	Louisville, New Albany and Chicago.	288		7	19,440 00		67 50	
22009	Richmond to Chicago, Ill	Pittsburgh, Cincinnati and Saint Louis.	225.5		13	16,641 90		73 80	
22010	Cincinnati, Ohio, to East Saint Louis, Ill.	Ohio and Mississippi	341		13½	73,315 00		215 00	
22011	Cambridge City to Columbus	Jeffersonville, Madison and Indianapolis.	68		6	3,060 00		45 00	
22012	Evansville to Terre Haute	Evansville and Crawfordsville	110		12	10,494 00		95 40	
22013	Terre Haute to Rockville	Logansport, Crawfordsville and Southwestern.	23		6	1,035 00		45 00	
22014	State Line to Logansport	Pittsburgh, Cincinnati and Saint Louis.	61		6	4,117 50		67 50	
22015	Peru to La Porte	Chicago, Cincinnati and Louisville	73		12	4,007 70		54 90	
22016	Fairland to Martinsville	Fairland, Franklin and Martinsville.	38.5		6	1,732 50		45 00	
22017	Bradford, Ohio, to Logansport, Ind.	Pittsburgh, Cincinnati and Saint Louis.	114.6		12	6,085 26		53 10	
22018	Indianapolis to Peoria, Ill	Indianapolis, Bloomington and Western.	212.2		18	20,434 86		96 30	
22019	Jeffersonville to North Vernon	Ohio and Mississippi	53.5		13	6,259 50		117 00	
22020	Fort Wayne to Connersville	Fort Wayne, Muncie and Cincinnati.	109		6	5,787 90		53 10	
22021	Richmond to Fort Wayne	Grand Rapids and Indiana	91.5		12	5,435 10		59 40	
22022	Anderson to Goshen	Cincinnati, Wabash and Michigan	114.32		6	6,687 72		58 50	
22024	Terre Haute to Danville, Ill	Evansville, Terre Haute and Chicago.	56.6		13	3,056 40		54 00	
22025	Indianapolis to Terre Haute	Indianapolis and Saint Louis	72		12	8,294 40		115 20	
22026	La Porte to Michigan City	Indianapolis, Peru and Chicago	12.36		12	556 20		45 00	
22027	Butler to Logansport	Detroit, Eel River and Illinois	94.5		6	5,103 00		54 00	
22028	Rockville to Logansport	Logansport, Crawfordsville and Southwestern.	92.1		6	4,393 17		47 70	

22029	La Fayette to Kankakee, Ill	Cincinnati, La Fayette and Chicago	75.75		13	21,967 50		290 00	
22030	Terre Haute to Martz	Cincinnati and Terre Haute	26.15		6	843 73		31 50	
22031	Attica to Veedersburgh	Indiana North and South	14		6	504 00		36 00	
22032	Evansville to Boonville	Lake Erie, Evansville and Southwestern.	18		12	810 00		45 00	
22033	Frankfort to Kokomo	Frankfort and Kokomo	25.5		12	1,101 60		43 20	
22034	Rockport to Huntingburgh	Cincinnati, Rockport and Southwestern.	31.02		6	977 13		31 50	
22035	Muncie to La Fayette	La Fayette, Muncie and Bloomington.	85.43		6	3,844 35		45 00	Pay estimated.
				3,132.975			327,958 82		
	ILLINOIS.								
23001	Chicago to Milwaukee, Wis	Chicago and Northwestern	87		25	20,184 00		232 00	
23002	Chicago to Freeport	do	42.5 78.5		18 12	25,168 00		208 00	
23003	Chicago to Union Pacific Transfer	do	218.4 272.6		15 15	117,816 69		289 87 199 96	
23004	Elgin to Geneva	do	44		6	2,200 00		50 00	
23005	Sterling to East Saint Louis	Saint Louis, Rock Island and Chicago.	291.36		6	18,355 68		63 00	
23007	Chicago to Burlington, Iowa Branch, Aurora to Galena Junction. Branch, Galva to Keithsburgh	Chicago, Burlington and Quincy	39.42 168.22 13 59.3		36 18 12 6	71,592 20		345 20 322 70 45 00 52 20	
23008	Rushville to Yates City Branch, Elmwood to Buda	do	63.75 45		6 6	5,902 88		51 30 58 50	
23009	Peoria to Galesburgh	do	54		12½	7,290 00		135 00	
23010	Galesburgh to Quincy	do	100		12	17,710 00		177 10	
23011	Burlington, Iowa, to Quincy, Ill	do	71.85		6	4,009 23		55 80	
23012	Streator to Aurora Branch, Aurora to Batavia	do	60.79 9		12 6	3,768 66		54 00	
23013	Mendota to Clinton, Iowa	do	64.19		6	2,888 55		45 00	
23014	Rock Falls to Cornton	do	47.23		6	2,125 35		45 00	
23015	Chicago to Davenport, Iowa	Chicago, Rock Island and Pacific	159 24		15¼ 15¼	58,171 80		314 60 339 60	
23016	Bureau Junction to Peoria	Chicago, Rock Island and Pacific	47		12	4,230 00		90 00	
23017	Chicago to East Saint Louis	Chicago and Alton	283		18½	55,354 80		195 60	
23018	Bloomington to Godfrey	do	111.4 40.6		9¼ 9¼	17,352 20		118 70 101 70	
23019	Washington to Dwight Branch, Varna to Lacon	do	70.08 10.55		6 6	3,628 35		45 00	
23020	Chicago to Cairo	Illinois Central	55 310		14¼ 14¼	56,490 00		176 00 151 00	
23021	Dubuque, Iowa, to Centralia, Ill	do	196.13 80.2 67.67		12 12 12	41,840 65		113 04 135 54 130 04	
23022	Joliet to Lake Station, Ind	Michigan Central	45		6	1,800 00		40 00	
23023	Decatur to East Saint Louis	Toledo, Wabash and Western	112		20	20,944 00		187 00	
23024	Pekin to Decatur	Pekin, Lincoln and Decatur	68.46		6	3,080 70		45 00	

B.—*Railroad-service as in operation on the 30th of June, 1877*—Continued.

Number of route.	State and termini.	Corporate title of company carrying the mail.	Distance.	Total distance in each State.	Number of trips per week.	Annual pay.	Annual pay in each State.	Annual cost per mile on each route.	Remarks.
	ILLINOIS—Continued.		*Miles.*	*Miles.*		*Dollars.*	*Dollars.*	*Dollars.*	
23025	Hannibal, Mo., to Naples, Ill. Branch, Maysville to Pittsfield	Toledo, Wabash and Western	45.5 6		6 6	6,260 50		131 00 50 00	
23026	La Fayette Junction, Ind., to Bloomington, Ill.	La Fayette, Muncie and Bloomington.	116.43		6	5,239 35		45 00	
23027	State Line to Warsaw	Toledo, Peoria and Warsaw	228.75		6	16,612 50		70 00	$600 per annum included for ferriage.
23028	Terre Haute, Ind., to East Saint Louis, Ill.	Indianapolis and Saint Louis	189		18	33,642 00		178 00	
23029	Urbana to Havana Branch, White Heath to Decatur.	Indianapolis, Bloomington and Western.	102.7 32.35		6 6	5,931 68		45 00 40 50	
23030	East Saint Louis to Duquoin	Saint Louis, Alton and Terre Haute.	71.8		14¼	8,544 20		119 00	
23031	East Saint Louis to Terre Haute, Ind.	Terre Haute and Indianapolis, lessee of Saint Louis, Vandalia and Terre Haute.	165.4		13	81,873 00		495 00	
23032	Saint Louis, Mo., to Nashville, Tenn. Branch, McLeansborough, to Shawneetown.	Saint Louis and Southeastern	162.65 107.6 47.72 40.9		12 12 12 6	22,147 82		68 04 60 75 63 99 36 45	
23033	Beardstown to Shawneetown	Ohio and Mississippi	229.7		6	14,471 10		63 00	
23034	Springfield to Gilman	Gilman, Clinton and Springfield	111.6		6	5,022 00		45 00	
23035	Chicago to Milwaukee, Wis	Chicago, Milwaukee and Saint Paul.	88.85		18	22,212 50		250 00	
23036	Aurora to Foreston	Chicago and Iowa	81.64		6	9,037 54		110 70	
23037	Vincennes, Ind., to Cairo, Ill	Cairo and Vincennes	158		6	10,665 00		67 50	
23038	Peoria to Jacksonville	Peoria, Pekin and Jacksonville	84.14		6	4,543 56		54 00	
23039	Carbondale to Grand Tower	Grand Tower Mining, Manufacturing and Transportation Company.	25		6	1,012 50		40 50	
23040	Peoria to Rock Island	Peoria and Rock Island	92		6	5,796 00		63 00	
23041	Quincy to Hannibal, Mo. Branch, Fall Creek to Louisiana	Chicago, Burlington and Quincy, lessee of Quincy, Alton and Saint Louis.	19.4 30.85		19 6	4,766 67		137 25 68 85	
23042	Chicago to Danville Branch, Bismarck to Snoddy's Mills.	Chicago, Danville and Vincennes	108 25.9		12 12	9,136 00		75 00 40 00	

23043	Streator to Altamont	Chicago and Paducah	156.8		6	7,840 00		50 00	
23044	Mattoon to Hervey City	Chicago and Illinois Southern	33.05		6	1,652 50		50 00	
23045	Carbondale to Marion	Carbondale and Shawneetown	18		6	810 00		45 00	
23046	Jacksonville to Virden	Jacksonville, Northwestern and Southeastern.	31.39		6	1,271 30		40 50	
23047	Chester to Tamaroa	Iron Mountain, Chester and Eastern	42		6	1,890 00		45 00	
23048	Terre Haute, Ind., to Peoria, Ill	Illinois Midland	179.93		6	8,996 50		50 00	
23049	Springfield to Havana	Springfield and Northwestern	48.2		8½	2,169 00		45 00	
23050	Vincennes, Ind., to Danville, Ill	Paris and Danville	114.19		6	4,809 69		42 12	
23051	Chicago to Peoria	Chicago, Pekin and Southwestern	163.22		6	7,344 90		45 00	Pay estimated.
23052	Courtland Station to Sycamore	Sycamore and Courtland	5		18	420 00		54 00	$150 per annum included for mail-messenger service.
23053	East Saint Louis to Cairo	Cairo and Saint Louis	148.5		6	7,484 40		50 40	
23054	Chicago to Byron	Chicago and Pacific	92.75		6	3,756 37		40 50	
23055	Decatur to Montezuma	Indianapolis, Decatur and Springfield.	87		6	3,915 00		45 00	
23056	Geneva to Batavia	Chicago and Northwestern	3.5		6	175 00		50 00	
23057	Rochelle to Rockford	Chicago, Rockford and Northern	27.64		6	1,243 80		45 00	Pay estimated.
23058	Alvin to Fisher	Havana, Rantoul and Eastern	40.5		6	1,312 20		32 40	
23059	Rock Island to Cable	Rock Island and Mercer County	21.9		6	985 50		45 00	Pay estimated.
				7,095.71			884,913 82		
	MICHIGAN.								
24001	Toledo, Ohio, to Detroit, Mich	Lake Shore and Michigan Southern	65.27		50¼	8,811 45		135 00	
24002	Monroe to Adrian	do	35.23		12	2,536 56		72 00	
24003	Adrian to Jackson	do	47.25		6	2,764 12		58 50	
24004	White Pigeon to Grand Rapids	do	95.67		9	7,749 27		81 00	
24005	Detroit to Chicago, Ill	Michigan Central	284		32½	63,332 00		223 00	
24006	Detroit to Grand Haven	Detroit and Milwaukee	189.67		15	19,630 84		103 50	
24007	Detroit to Port Huron	Grand Trunk	64.5		15	6,791 85		105 30	
24008	Jackson to Fort Wayne, Ind	Fort Wayne, Jackson and Saginaw	96.82		6	5,925 38		61 20	
24009	Jackson to Gaylord	Michigan Central	169 67.36		8¼ 8¾	12,834 40		60 00 40 00	
24010	Jackson to Grand Rapids	do	94.86		12	8,537 40		90 00	
24012	Lenox to Romeo	Saint Clair and Chicago Air Line	16.13		12	725 85		45 00	
24013	Detroit to Bay City	Detroit and Bay City	108.97		12	9,262 45		85 00	
24015	Monroe to Ludington Branch, Otter Lake Junction to Otter Lake. Branch, East Saginaw to Bay City.	Flint and Père Marquette	171.17 83.12 14.53 12.75		12½ 12½ 6 27	21,156 99		69 12 96 00 40 00 60 00	
24017	Detroit to Howard City	Detroit, Lansing and Lake Michigan.	164.67		11¼	12,844 26		78 00	
24018	Fort Wayne, Ind., to Walton, Mich	Grand Rapids and Indiana	260.55		9¼	14,632 48		56 16	
24019	Kalamazoo to South Haven	Michigan Central	39.74		6	1,987 00		50 00	
24020	Lansing to Fort Wayne Junction, Ind.	Chicago and Lake Huron	166.2		6	7,479 00		45 00	
24021	New Buffalo to Pent Water Branch, Holland to Grand Rapids.	Chicago and Michigan Lake Shore.	170.56 26.65		14½ 12	15,798 12		82 00 68 00	

B.—*Railroad-service as in operation on the 30th of June*, 1877—Continued.

Number of route.	State and termini.	Corporate title of company carrying the mail.	Distance.	Total distance in each State.	Number of trips per week.	Annual pay.	Annual pay in each State.	Annual cost per mile on each route.	Remarks.
	MICHIGAN—Continued.		*Miles.*	*Miles.*		*Dollars.*	*Dollars.*	*Dollars.*	
24022	Port Huron to Flint	Chicago and Lake Huron	66.59		6	2,996 55		45 00	
24023	Allegan to Muskegon	Michigan Lake Shore	58.37		6	2,626 65		45 00	
24024	Ypsilanti to Bankers	Detroit, Hillsdale and Southwestern.	65.54		6	3,277 00		50 00	
24025	Jackson to Niles	Michigan Central	104.57		6	5,437 64		52 00	
24026	Grand Rapids to White Cloud	Grand Rapids, Newaygo and Lake Shore.	36.27 10.76		6 6	2,297 70		50 00 45 00	
24027	Niles to South Bend, Ind	Michigan Central	12.2		6	610 00		50 00	
24028	Jonesville to Lansing	Lake Shore and Michigan Southern	60.87		6	3,177 41		52 20	
24030	East Saginaw to Saint Louis	Saginaw Valley and Saint Louis	35.23		6	1,585 35		45 00	
24031	Fort Howard to Ishpeming	Chicago and Northwestern	180.3		7	11,683 44		64 80	
24032	Muskegon to Big Rapids	Chicago and Michigan Lake Shore	56.64		6	2,548 80		45 00	
24033	Ionia to Stanton	Detroit, Lansing and Lake Michigan.	25.31		6	1,265 50		50 00	
24034	Walton to Traverse City	Continental Improvement Company.	26.26		6	1,181 70		45 00	
24035	Toledo, Ohio, to Detroit, Mich	Toledo, Canada Southern and Detroit.	39.07 17.32		14¾ 14¾	5,361 08		92 00 102 00	
24036	Grosse Isle to Fayette, Ohio	Chicago and Canada Southern	70.3		6	3,515 00		50 00	
24037	Saint Clair to Richmond	Michigan Midland and Canada	16.76		12	838 00		50 00	
24038	Walton to Petoskey	Grand Rapids and Indiana	71.86		6	2,949 13		41 04	
24039	Flint to Lansing	Chicago and Northeastern	50.18		6	2,258 10		45 00	Pay estimated.
24040	Saint Louis to Cedar Lake	Chicago, Saginaw and Canada	20.07		6	903 15		45 00	Do.
				3,469.14			277,311 62		
	WISCONSIN.								
25001	Milwaukee to North McGregor, Iowa.	Chicago, Milwaukee and Saint Paul.	197.2		12	24,650 00		125 00	
25002	Milwaukee to La Crosse	do	116.64 61.6 16.8		12 12 12	47,732 44		244 00 232 68 294 00	
25003	Milwaukee to Berlin	do	94.8		12	6,825 60		72 00	
25004	Milton Junction to Monroe	do	42.8		6	2,482 40		58 00	
25005	Watertown to Madison	do	38.45		6	1,922 50		50 00	
25006	Horicon to Portage	do	45.25		6	2,262 50		50 00	
25007	Nepeuskun to Winneconne	do	16.25		6	731 25		45 00	
25008	Oshkosh to Ripon	do	21		12	1,050 00		50 00	

25009	Chicago, Ill., to Green Bay, Wis.	Chicago and Northwestern	176.7 66.5		14¼ 14¼	52,398 20		230 00 176 80	
25010	Caledonia Station to Winona Junction.	do	135.45 54.9		12 12	21,722 40		132 00 70 00	
25011	Kenosha to Rockford	do	73.6		6	5,520 00		75 00	
25012	Winona, Minn., to Winona Junction, Wis.	La Crosse, Trempealeau and Prescott.	30.45		12	5,176 50		170 00	
25013	Milwaukee to Fond du Lac	Chicago and Northwestern	63.53		6	4,320 04		68 00	
25014	Elroy to Saint Paul, Minn Branch, Stillwater Junction to Stillwater.	West Wisconsin	199. 3.25		12 6	12,696 39		63 36 27 00	
25015	Green Bay to Winona, Minn	Green Bay and Minnesota	216.41		6	11,253 32		52 00	
25016	Milwaukee to Green Bay Branch, Hilbert to Menasha	Wisconsin Central, operated by Phillips and Colby Construction Company.	111.54 16		6 6	7,690 25		61 20 54 00	
25017	Menasha to Ashland	do	251.02		6	11,295 90		45 00	Pay estimated on 86.9 miles.
25018	Milwaukee to Two Rivers Branch, Manitowoc to New London.	Milwaukee, Lake Shore and Western.	85 65.56		12 6	9,325 20		75 00 45 00	Pay estimated on 21.06 miles.
25019	Sheboygan to Princeton	Sheboygan and Fond du Lac	79.05		6	4,012 50		50 00	$60 per annum included for mail-messenger service.
25020	Warren to Mineral Point	Mineral Point	33		6	1,485 00		45 00	
25021	Calamine to Platteville	do	18.7		6	935 00		50 00	
25022	Tomah to Wausau	Wisconsin Valley	90.04		6	4,051 80		45 00	
25023	Madison to Portage	Chicago, Milwaukee and Saint Paul, operating Chicago and Superior.	39.5		6	1,777 50		45 00	
25024	Racine to Rock Island Junction Branch. Elkhorn to Eagle	Western Union	189.4 18.1		12 6	14,451 30		72 00 45 00	Pay estimated.
25025	Galena, Ill., to Platteville, Wis	Galena and Southern Wisconsin	30.69		6	1,381 05		45 00	
25026	Eau Claire to Chippewa Falls	Chippewa Falls and Western	11.67		6	525 15		45 00	
25027	Stevens Point to Portage	Wisconsin Central, operated by Phillips and Colby Construction Company.	73.23		6	3,295 35		45 00	Pay estimated.
25028	Hudson to Clayton	North Wisconsin	44		6	1,980 00		45 00	Do.
25029	Lone Rock to Richland Centre	Pine River Valley and Stevens Point.	16.5		6	742 50		45 00	
				2,843.58			263 692 04		
	IOWA.								
27001	Burlington to Plymouth	Burlington, Cedar Rapids and Northern.	219.54		6	16,794 81		76 50	
27002	Cedar Rapids to Postville	do	99.8		6	4,580 82		45 90	
27003	Cedar Rapids to Traer	do	24.77		6	1,114 65		45 00	
27004	Muscatine to Riverside	do	32.23		6	1,450 35		45 00	
27005	Burlington to Council Bluffs Branch, Pacific Junction to East Plattsmouth. Branch, Red Oak to Eastport.	Burlington and Missouri River	293.14 4 50		6 6 6	58,640 36		191 20 36 00 48 96	
27006	Chariton to Leon	do	37.44		6	1,684 80		45 00	
27007	Creston to Hopkins, Mo	do	44.4		6	2,597 40		58 50	
27008	Burlington to Unionville, Mo Unionville o Laclede, Mo	Burlington and Southwestern	130.5 53.02		6 6	5,872 50 2,385 90		45 00 45 00	Pay estimated.

B.—*Railroad-service as in operation on the 30th of June*, 1877—Continued.

Numer of route.	State and termini.	Corporate title of company carrying the mail.	Distance.	Total distance in each State.	Number of trips per week.	Annual pay.	Annual pay in each State.	Annual cost per mile on each route.	Remarks.
	IOWA—Continued.		*Miles.*	*Miles.*		*Dollars.*	*Dollars.*	*Dollars.*	
27009	Villisca to Clarinda	Burlington and Missouri River	16		6	720 00		45 00	
27010	Albia to Norwood	Central Railroad Company of Iowa	189.2		6	11,238 48		59 40	
27011	Keokuk to Burlington	Chicago, Burlington and Quincy	42.75		12	3,001 05		70 20	
27012	Clinton to La Crescent Junction, Minn.	Chicago, Dubuque and Minnesota	179.77		12	12,224 36		68 00	
27013	Stanwood to Tipton	Chicago and Northwestern	8.81		6	440 50		50 00	
27014	Davenport to Missouri River	Chicago, Rock Island and Pacific	54 264		12 12	65,395 20		226 40 201 40	
27015	Des Moines to Indianola Branch, Summerset Junction to Winterset.	do	21.4 27.1		6 6	2,278 80		49 50 45 00	
27016	Washington to Oskaloosa Oskaloosa to Knoxville	do	54.01 25.23		6 6	2,430 45 1,135 35		45 00 45 00	Pay estimated.
27017	Wilton Junction to Leavenworth, Kans.	do	322.77		6	24,691 91		76 50	
27018	Davenport to Maquoketa	Davenport and Saint Paul	42.76		6	1,924 20		45 00	
27019	Keokuk to Des Moines	Keokuk and Des Moines	162.81		6	12,373 56		76 00	
27020	Farley to Cedar Rapids	Dubuque and Southwestern	55.37		6	2,879 24		52 00	
27021	Dubuque to Sioux City	Illinois Central	327.12		6	29,440 80		90 00	
27022	Waterloo to Mona	do	80		12	5,840 00		73 00	
27023	Beulah to Elkader	Iowa Eastern	19.59		6	979 50		50 00	
27024	Clinton to Anamosa	Iowa Midland	74.1		6	3,705 00		50 00	
27025	Calmar to Algona	Chicago, Milwaukee and Saint Paul	127.8		6	5,827 68		45 60	
27026	Conover to Decorah	do	9.5		6	522 50		55 00	
27027	Davenport to Fayette	Davenport and Saint Paul	129.33		6	5,936 25		45 90	
27028	Sabula to Marion	Chicago, Milwaukee and Saint Paul	87.75		6	4,387 50		50 00	
27029	Missouri Valley to Sioux City Branch, California Junction to Wisner.	Sioux City and Pacific	76 83.4		6 6	11,003 40		95.40 45 00	
27030	Des Moines to Ames	Des Moines and Minnesota	37.12		6	1,856 00		50 00	
27031	Des Moines to Fort Dodge	Des Moines and Fort Dodge	89.04		6	4,247 20		47 70	
27032	Grinnell to Montezuma	Central Railroad Company of Iowa	14.75		6	663 75		45 00	
27033	Albia to Knoxville	Chicago, Burlington and Quincy	33.97		6	1,528 65		45 00	
27034	Sioux City to Portlandville	Sioux City and Pembina	30.01		6	1,350 45		45 00	
27035	Burlington to Winfield	Burlington and Northwestern	34.12		6	1,535 40		45 00	Pay estimated.
				3,708.42			314,678 77		

	MINNESOTA.								
26001	Duluth to Bismarck, Dak	Northern Pacific	229 195.12		6 3	23,834 80		70 00 40 00	
26002	Saint Paul to Breckinridge	Saint Paul and Pacific	216.99		8	8,749 04		40 32	
26003	Saint Paul to Sauk Rapids	do	76.3		9½	4,010 32		52 56	
26004	East Saint Cloud to Melrose	do	35.06		6½	1,363 13		38 88	
26005	Saint Paul to Saint James	Saint Paul and Sioux City	122.64		12	9,359 88		76 32	
26006	White Bear Lake to Sioux City Junction.	Minneapolis and Saint Louis	41		9¾	2,050 00		50 00	
26007	Saint Paul to Duluth	Lake Superior and Mississippi	155.73		12	9,979 17		64 08	
26008	White Bear Lake to Stillwater	do	13.2		12	660 00		50 00	
26009	Minneapolis to North McGregor, Iowa.	Chicago, Milwaukee and Saint Paul.	147.43 68		6 6	18,657 05		95 00 68 40	
26010	Hastings to Glencoe	do	74.59		6	2,148 19		28 80	
26011	Winona to La Crosse, Wis	do	28.75		12	4,600 00		160 00	
26012	Austin to Mason City, Iowa	do	41.38		12	2,069 00		50 00	
26013	Saint Paul to Winona	do	103.84		12	18,483 52		178 00	
26014	Saint Peter to Marshall	Winona and Saint Peter	30 79.66		6 3	4,339 80		65 00 30 00	
26015	Winona to Saint Peter	do	144.25		6	8,308 80		57 60	
26016	La Crosse, Wis., to Winnebago City, Minn.	Southern Minnesota	170.49		6	8,347 19		48 96	
26017	Mankato to Wells	Central Railroad Company of Minnesota.	41.06		6	1,478 16		36 00	
26018	Saint James to Lemars, Iowa	Sioux City and Saint Paul	122.83		6	7,075 00		57 60	
26019	Worthington to Luverne	Worthington and Sioux Falls	34.61		6	1,245 96		36 00	
				2,171.93			136,759 04		
	NEBRASKA.								
34001	Council Bluffs, Iowa, to Ogden City, Utah.	Union Pacific	1,035.2		7	320,912 00		310 00	
34002	Plattsmouth to Kearney	Burlington and Missouri River Railroad Company in Nebraska.	191		6	12,033 00		63 00	
34003	Omaha to Tekama	Omaha and Northwestern	47.8		6	2,390 00		50 00	
34004	Omaha to Oreopolis Junction	Burlington and Missouri River Railroad Company in Nebraska.	17.74		6	1,197 45		67 50	
34005	Brownville to Seward	Nebraska	105.85		6	5,430 10		51 30	
34006	Crete to Beatrice	Burlington and Missouri River Railroad Company in Nebraska.	31.76		6	1,429 20		45 00	
34007	Covington to Ponca	Covington, Columbus and Black Hills.	26.56		6	1,195 20		45 00	Pay estimated.
34008	Valley to Wahoo	Omaha and Republican Valley	19		6	855 00		45 00	Do.
				1,474.91			345,441 95		
	KANSAS.								
33001	Kansas City, Mo., to Cheyenne City, Wyo. Branch, Lawrence to Leavenworth.	Kansas Pacific	745 33		9 7	130,068 00		171 00 81 00	

B.—*Railroad-service as in operation on the 30th of June*, 1877—Continued.

Number of route.	State and termini.	Corporate title of company carrying the mail.	Distance.	Total distance in each State.	Number of trips per week.	Annual pay.	Annual pay in each State.	Annual cost per mile on each route.	Remarks.
	KANSAS—Continued.		*Miles.*	*Miles.*		*Dollars.*	*Dollars.*	*Dollars.*	
33002	Atchison to Washington	Central Branch Union Pacific	120.4		7	10,836 00		90 00	Pay on 20.4 miles estimated.
33003	Lawrence to Coffeyville Branch, Cherry Vale to Independence.	Leavenworth, Lawrence and Galveston.	142.9 10		6 6	8,641 15		56 88 51 30	
33004	Elwood to Hastings, Nebr	Saint Joseph and Denver City	227.2		6	9,487 87		41 76	
33005	Kansas City, Mo., to Baxter Springs, Kans.	Missouri River, Fort Scott and Gulf.	160.2		13	11,073 03		69 12	
33006	Junction City to Parsons	Missouri, Kansas and Texas	156.5		6	6,535 44		41 76	
33007	Atchison to Pueblo, Colo Branch, Newton to Wichita	Atchison, Topeka and Santa Fé	618.56 27.09		6 6	35,108 91		54 00 63 00	
33008	Kansas City, Mo., to Ottawa, Kans	Leavenworth, Lawrence and Galveston.	33.3		6	2,517 48		75 60	Pay from Olathe to Ottawa.
33009	Atchison to Lincoln, Nebr	Atchison and Nebraska	152.28		7	11,421 00		75 00	
33010	Leavenworth to Holton	Kansas Central	56.5		6	2,825 00		50 00	
33012	Junction City to Clay Centre	Junction City and Fort Kearney	33.85		6	1,827 90		54 00	
33013	Topeka to Kansas City, Mo	Atchison, Topeka and Santa Fé	68.84		6	4,646 70		67 50	
33014	Fort Scott to Memphis	Fort Scott, Southeastern and Memphis.	6.52		6	305 38		31 50	Pay estimated; $100 per annum included for mail-messenger service.
33015	Ottawa to Williamsburg	Kansas City, Burlington and Santa Fé.	17.38		6	782 10		45 00	Pay estimated.
				2,609.52			236,075 96		
	NEVADA.								
45001	Virginia City to Reno	Virginia and Truckee	51.75		6	3,726 00		72 00	
45002	Palisades to Eureka	Eureka and Palisades	91.27		6	4,107 15		45 00	Pay estimated.
				143.02			7,833 15		
	CALIFORNIA.								
46001	San Francisco to Ogden City, Utah	Central Pacific	880.96		7	237,418 72		269 50	
46002	San Francisco to Soledad Branch, Gilroy to Tres Pinos	Southern Pacific	143.8 20		14 7	9,191 88		57 60 45 00	
46003	Roseville to Redding	Central Pacific	151.45		7	16,401 17		121 50	

46004	Folsom City to Shingle Springs	Placerville and Sacramento Valley	26.5		7	1,264 05		47 70	
46005	Sacramento City to Folsom City	Sacramento Valley	23.2		12	1,419 84		61 20	
46006	Sacramento City to San Francisco	California Pacific	86.72		14	7,102 37		81 00	
46007	Davisville to Grafton	do	18.34		6	825 30		45 00	
46008	Napa Junction to Calistoga	do	34.6		6	1,557 00		45 00	
46009	Marysville to Oroville	California Northern	30		6	1,350 00		45 00	
46010	Lathrop to Goshen	Central Pacific	146.3		6	10,533 60		72 00	
46011	San Francisco to Cloverdale	San Francisco and North Pacific	90		6	6,075 00		67 50	
46012	Stockton to Milton	Stockton and Copperopolis	30		6	2,205 00		45 00	
	Branch, Peters to Oakdale		19		6				
46013	Wilmington to Los Angeles	Southern Pacific	21.75		6	783 00		36 00	
46014	Goshen to Caliente	do	95.71		7	5,168 34		54 00	Pay on 54.41 miles estimated.
46015	Elmira to Madison	Vaca Valley	29		12	1,305 00		45 00	Pay on 11 miles estimated.
46016	Saucelito to Tomales	North Pacific Coast	49.18		6	2,460 60		45 00	Pay estimated.
	Branch, San Anselmo to San Quentin.		5.5		6			45 00	
46017	Los Angeles to Anaheim	Southern Pacific	21.7		6	1,171 80		54 00	
46018	San Fernando to San Bernardino	do	81.12		6	4,380 48		54 00	
46019	Visalia to Goshen	Visalia	8.37		6	376 65		45 00	
46020	Colfax to Nevada City	Nevada County Narrow Gauge	22.81		6	1,129 09		49 50	
46021	Los Angeles to Santa Monica	Los Angeles and Independence	16.8		6	604 80		36 00	
46022	Santa Cruz to Watsonville	Santa Cruz	23.39		6	1,052 55		45 00	Pay estimated.
46023	Woodland to Williams	California Northern	39.72		6	1,787 40		45 00	Do.
46024	Galt to Ione	Amador Branch	27.84		6	1,252 80		45 00	Do.
46025	West Oakland to Berkeley	Central Pacific	5.9		6	265 50		45 00	Do.
				2,149.86			319,081 94		
	OREGON.								
44001	Portland to Roseburgh	Oregon and California	199.1		6	17,919 00		90 00	
44002	Portland to Saint Joseph	Oregon Central	48.61		6	2,187 45		45 00	
				247.71			20,106 45		
	WASHINGTON TERRITORY.								
43001	Kalama to New Tacoma	Northern Pacific	105.6		6	5,702 40		54 00	
				105.6			5,702 40		
	DAKOTA TERRITORY.								
35001	Sioux City, Iowa, to Yankton, Dak	Dakota Southern	61.48		6	4,426 56		72 00	
				61.48			4,426 56		
	UTAH TERRITORY.								
41001	Ogden City to Salt Lake City	Utah Central	36.5		6	2,956 50		81 00	
41002	Salt Lake City to York	Utah Southern	48		6	3,985 20		56 70	
			27		6			46 80	
41003	Ogden City to Franklin, Idaho	Utah Northern	79.94		7	5,036 22		63 00	
41004	Sandy Station to Bingham Canyon	Bingham Canyon and Camp Floyd	22.5		6	1,012 50		45 00	Pay estimated.
				213.94			12,990 42		

B.—*Railroad-service as in operation on the 30th of June*, 1877—Continued.

Number of route.	State and termini.	Corporate title of company carrying the mail.	Distance.	Total distance in each State.	Number of trips per week.	Annual pay.	Annual pay in each State.	Annual cost per mile on each route.	Remarks.
	COLORADO TERRITORY.		*Miles.*	*Miles.*		*Dollars.*	*Dollars.*	*Dollars.*	
38001	Denver to El Moro	Denver and Rio Grande	209.2		7	23,112 36		100 80	
	Branch, Pueblo to Canyon City		45		6			45 00	
38003	Hughes Station to Boulder	Denver and Boulder Valley	27.75		6	1,873 13		67 50	
38004	Denver to Black Hawk	Colorado Central	38.5		7	4,014 00		54 00	
	Branch, Golden Junction to Longmont.		39		7			45 00	
	Branch to Floyd's Hill		4		7			45 00	
38065	Kit Carson to West Las Animas	Arkansas Valley	56		7	3,024 00		54 00	
38006	Cucharas to La Veta	Denver and Rio Grande	22.55		6	1,014 75		45 00	Pay estimated.
				442.00			33,038 24		

THOS. J. BRADY,
Second Assistant Postmaster-General.

C.—*Steamboat-service as in operation on the 30th of June, 1877.*

Number of route.	State and termini.	Name of contractor.	Distance.	Total distance in each State.	Number of trips per week.	Annual pay.	Annual pay in each State.	Remarks.
	MAINE.		*Miles.*	*Miles.*		*Dollars.*	*Dollars.*	
250	Bath to Booth Bay	Eastern Steamboat Company	12	.....	...	700 00	.....	Six trips a week during navigation, and six additional trips a week from July 5 to September 20.
	Wiscasset to Booth Bay		20	.....	...		.....	Six trips a week from December 1 to March 31.
250*b*	Green Vale to Indian Rock	C. W. Howard	10	.....	6	200 00	.....	From June 1 to September 30.
				42			900 00	
	NEW HAMPSHIRE.							
316	Alton Bay to Wolfborough	Boston and Maine Railroad Company	10	.....	6	1,200 00	.....	Three trips a week during navigation.
	Centre Harbor to Meredith Village		20	.....	...			
321	Weir's Bridge to Wolfborough	Winnipiseogee Steamboat Company	30	.....	6	650 00	.....	During navigation.
				60			1,850 00	
	MASSACHUSETTS.							
688	Wood's Hole to Nantucket	Nantucket and Cape Cod Steamboat Company.	30	.....	.....	2,500 00	.....	Six trips a week for four months; three trips a week for eight months.
				30			2,500 00	
	RHODE ISLAND.							
811	Fall River, Mass., to New York, N. Y.	Old Colony Steamboat Company	186	.....	.....	10,000 00	.....	Six trips a week for nine months; seven trips a week for three months.
826	Newport to Wickford	Newport and Wickford Railroad and Steamboat Company.	12	.....	12	6,000 00	.....	
				198			16,000 00	
	NEW YORK.							
1389	Burlington, Vt., to Plattsburg, N. Y.	Champlain Transportation Company	25	.....	6	1,153 00	.....	During navigation.
1694	Geneva to Watkins	Seneca Lake Steam Navigation Company.	65	.....	6	3,200 00	.....	
1790	Lake George to Fort Ticonderoga	Champlain Transportation Company	40	.....	6	400 00	.....	For four months.
1822	Penn Yan to Hammondsport	Lake Keuka Steam Navigation Company.	21	.....	6	200 00	.....	During navigation.
1824	Harlem River to Jersey City, N. J	New England Transfer Company	11.5	.....	7	1,800 00	.....	
				162.5			6,753 00	

C.—*Steamboat-service as in operation on the 30th of June*, 1877—Continued.

Number of route.	State and termini.	Name of contractor.	Distance.	Total distance in each State.	Number of trips per week.	Annual pay.	Annual pay in each State.	Remarks.
	NEW JERSEY.		*Miles.*	*Miles.*		*Dollars.*	*Dollars.*	
7026	New York, N. Y., to Sandy Hook, N. J	New Jersey Southern Railroad Company.	19.6	.....	12	1,181 88	.....	
				19.6			1,181 88	
	PENNSYLVANIA.							
8151	Pittsburgh to Greensborough	Pittsburgh, Brownsville, and Geneva Packet Company.	88.5	.....	6	4,700 00	.....	
				88.5			4,700 00	
	MARYLAND.							
10100	Baltimore to Cambridge	Maryland Steamboat Company.....	100	.....	3	1,200 00	.....	
10101	Baltimore to Wilson's Wharf, Va.....	Eastern Shore Steamboat Company ..	150	.....	6	4,200 00	.....	
10102	Baltimore to Queenstown.....	Chester River Steamboat Company ...	40	.....	3	750 00	.....	
				290			6,150 00	
	WEST VIRGINIA.							
12098	Wheeling to Parkersburgh	John Mulrine.....	92	.....	6	7,200 00	.....	
12099	Parkersburgh to Gallipolis, Ohio	Parkersburgh Transportation Company.	89.5	.....	3	5,200 00	.....	
12100	Kanawha C. H. to Gallipolis, Ohio.....	A. J. Beckett	59	.....	3	1,300 00	.....	
				240.5			13,700 00	
	VIRGINIA.							
11094	Washington, D. C., to Fortress Monroe, Va.	George H. Plant	221	.....	3	7,000 00	.....	
11095	West Point to Baltimore, Md	Baltimore, Chesapeake and Richmond Steamboat Company.	200	.....	3	1,200 00	.....	
11096	Norfolk to Baltimore, Md	Baltimore Steam Packet Company....	2 0	.....	6	18,000 00	.....	
11097	Norfolk to Eastville	Old Dominion Steamship Company ...	57	.....	3	3,500 00	.....	
11098	Norfolk to Matthews C. H	.....do	60	.....	3	3,000 00	.....	
11099	Norfolk to Richmond	John A. Post.....	158	.....	3	4,500 00	.....	
11100	Fredericksburgh to Baltimore, Md....	Henry Williams	261	.....	2	2,600 00	.....	
				1,157			39,800 00	

	NORTH CAROLINA.							
13096	Norfolk, Va., to Poplar Branch, N. C	Zimri McDonald	75		2	1,393 00		
13097	Plymouth to Franklin	do	106		3	4,237 00		
13098	Plymouth to Windsor	do	30		3	999 00		
13099	Wilmington to Smithville	do	28		6	2,199 00		
13100	Wilmington to Fayetteville	W. H. Bagley	112		2	1,175 00		
				351			10,003 00	
	SOUTH CAROLINA.							
14099	Charleston to Moultrieville	Zimri McDonald	7.5		7	481 07		
14100	Charleston to Edisto Island	Peter Toglio	43		1	800 00		
				50.5			1,281 07	
	GEORGIA.							
15100	Rome to Gadsden, Ala	J. M. Elliott	155		2	3,600 00		
				155			3,600 00	
	FLORIDA.							
16087	Jacksonville to Fort George	J. M. Fitzgerald	30		3	600 00		
16088	Milton to Warrington	Temporary carrier	39		6	2,500 00		
16089	New York, N. Y., to Galveston, Tex	C. H. Mallory & Co	2,036		1	10,400 00		
16090	Palatka to Crescent City	C. R. Griffing & Co	30		2	428 57		
16091	Cedar Keys to Key West	New Orleans, Florida and Havana Steamship Company.	360		1	18,000 00		
16092	Fernandina to Trader's Hill, Ga	Joseph Lee	10 88.5		4 2	2,768 13		
16093	Pensacola to Freeport	J. L. McKinnon	100		2	1,939 00		
16094	New Orleans, La, to Key West, Fla	New Orleans, Florida and Havana Steamship Company.	752		1	5,200 00		
16096	Palatka to Okahumpka	S. J. Bouknight	275			2,400 00		Two trips a week for four months; one trip a week for eight months.
16097	Jacksonville to Sanford	Z. M. Shirley & W. E. Hite	102 146.5		6 3	13,633 12		
16098	Eufaula, Ala., to Apalachicola, Fla	S. J. Whiteside	140 151		2 1	4,000 00		
16100	Cedar Keys to Tampa	James McKay	175		2	13,570 00		
				4,435			75,439 82	
	MISSISSIPPI.							
18098	Greenwood to Sharkey's	S. H. Parisot	110		1	1,200 00		
18099	Vicksburg to Faisonia	do	240		1	3,000 00		
18100	Vicksburg to Greenwood	do	266		2	4,800 00		
				616			9,000 00	

C.—*Steamboat-service as in operation on the 30th of June, 1877*—Continued.

Number of route.	State and termini.	Name of contractor.	Distance.	Total distance in each State.	Number of trips per week.	Annual pay.	Annual pay in each State.	Remarks.
	LOUISIANA.		*Miles.*	*Miles.*		*Dollars.*	*Dollars.*	
30093	New Orleans to Vicksburgh, Miss	Leathers, Tobin & Cannon	408		3	$35,000 00		
30095	New Orleans to Hope Villa	M. B. Muncy	119		1	3,000 00		
30097	Morgan City to New Iberia	M. P. Young	74		6	6,600 00		
30098	New Orleans to Saint Francisville	J. J. Brown	170		2	10,000 00		
30099	New Orleans to Covington	Mandeville and New Orleans Daily Packet Company.	62		3	3,950 00		
30100	New Orleans to Port Eads	J. B. Price	116 45		2 1	3,564 32		
				994			62,114 32	
	TEXAS.							
31092	Morgan City, La., to Brazos Santiago, Tex.	Charles Morgan	465			4,800 00		Two trips a month.
31096	Galveston to Morgan City, La	do	225			50,000 00		Three trips a week for six months; six trips a week for six months.
31097	Galveston to Indianola	do	125			10,000 00		Three trips a week for eight months; two trips a week for four months.
31100	Sabine Pass to Wiess Bluff	J. B. Price	81		2	4,805 08		
				896			69,605 08	
	ARKANSAS.							
29094	Camden to New Orleans, La	J. D. Adams	718		1	40,000 00		
29095	Memphis, Tenn., to Wittsburgh, Ark	do	116		1	7,500 00		
29096	Jacksonport to Pocahontas	do	150		2	8,800 00		
29097	Memphis, Tenn., to Osceola, Ark	do	74		2	6,800 00		
29098	Memphis, Tenn., to Vicksburgh, Miss	S. S. Lee	409		2	17,400 00		
29100	Memphis, Tenn., to Friar's Point, Miss	James Lee, sen	112		3	2,000 00		
29103	White River to Pine Bluff	J. D. Adams	182.5		2	5,000 00		
29104	Pine Bluff to Little Rock	do	105		2	2,000 00		
29105	White River to Jacksonport	M. R. Harry	356		2	5,000 00		
				2,222.5			94,600 00	
	MISSOURI.							
28099	Saint Louis to Grand Tower, Ill	J. A. Scudder	125		3	1,250 00		
28100	Saint Louis to Memphis, Tenn	do	450		3	25,000 00		
				575			26,250 00	

	TENNESSEE.							
19098	Loudon to King's Creek	T. W. Fritts	49		6	2,466 00		
19099	Chattanooga to King's Creek	Joseph Glover	110		2	1,640 00		
				159			4,106 00	
	KENTUCKY.							
20097	Louisville to Evansville, Ind	Sherley & Hite	202		6	15,000 00		
20098	Evansville, Ind., to Cairo, Ill	Evansville, Cairo and Memphis Packet Company.	202		6	15,000 00		
20099	Bowling Green to Evansville, Ind	Green and Barren River Navigation Company.	225		2	4,800 00		
20100	Paducah to Waterloo, Ala	Evansville and Tennessee River Packet Company.	260		2	6,000 00		
				889			40,800 00	
	OHIO.							
21141	Portsmouth to Cincinnati	David Gibson	127.75		6	9,000 00		
21142	Portsmouth to Gallipolis	William Bay	51.35 36.65		6 3	4,993 00		
				215.75			13,993 00	
	MICHIGAN.							
24094	Manistee to Milwaukee, Wis	Engelmann Transportation Company	150		6	4,160 00		During navigation.
24097	Detroit to Sault de Ste. Marie	J. T. Whiting	350		2	880 00		From June 15 to November 15.
24098	Houghton to Minong	A. J. Corey	80		1	1,062 00		From May 1 to November 30.
24099	Bay City to Alpena	Darius Cole	143		6	10,000 00		During navigation.
24100	Grand Haven to Milwaukee, Wis	M. Engelmann	85		6	3,120 00		Do.
				808			19,222 00	
	CALIFORNIA.							
46101	San Francisco to Portland, Oreg	George K. Otis	670		1	25,000 00		
46102	San Francisco to Sacramento City	California Steam Navigation Company	230		6	8,000 00		
46273	Sacramento to San Quentin	A. D. Moore	12		7	1,100 00		
46275	Tahoe to Tahoe	W. W. Lapham	50.5			3,000 00		Six trips a week for six months; one trip a week for six months.
				962.5			37,100 00	
	OREGON.							
44101	Portland to Astoria	Oregon Steam Navigation Company	120		6	14,906 83		
44102	Portland to The Dalles	Zenos F. Moody	120		6	15,535 00		
				240			30,441 83	
	WASHINGTON TERRITORY.							
43101	Olympia to Victoria, British Columbia	Philip D. Moore	27.4 145.2		6 2	29,676 74		
43108	Seattle to Sehome	Samuel Coulter	115.2 30.7		2 1	6,409 28		
43115	Port Townsend to Semiahmoo	do	132		1	5,013 95		
43132	Portland, Oreg., to Sitka, Alaska	George K. Otis	1,366			34,800 00		One trip per month.
				1,816.6			75,899 97	

THOS. J. BRADY,
Second Assistant Postmaster-General.

D.—*Table showing the increase and decrease in mail-transportation and cost during the year ended June 30, 1877.*

States and Territories.	CELERITY, CERTAINTY, AND SECURITY.				STEAMBOAT.				RAILROAD.				Total annual transportation.		Total annual cost.	
	Length of routes.		Cost.		Length of routes.		Cost.		Length of routes.		Cost.					
	Increase.	Decrease.	Increase.	Decrease.	Increase.	Decrease.	Increase.	Decrease.	Increase.	Decrease.	Increase.	Decrease.	Increase.	Decrease.	Increase.	Decrease.
	Miles.	*Miles.*	*Dollars.*	*Dollars.*	*Miles.*	*Miles.*	*Dollars.*	*Dollars.*	*Miles.*	*Miles.*	*Dollars.*	*Dollars.*	*Miles.*	*Miles.*	*Dollars.*	*Dollars.*
Maine	5		426		10		200		4			699	12,384			73
New Hampshire	18		883							*24	2,635		158,704		3,518	
Vermont		14	565									8,003	47,216			7,438
Massachusetts	9		391		†15				5			16,634		13,893		16,243
Rhode Island	2			42					9			603	12,186			645
Connecticut	66		1,178									5,575	58,210			4,397
New York		203		1,698	11		1,800		115			203,043		340,078		202,941
New Jersey		39		1,714		22		702	156			27,704	12,539			30,120
Pennsylvania		216		24,480			330		309		122,517		843,854		98,367	
Delaware		6		47						10		2,549		13,276		2,596
Maryland	66			6,036	100		2,400		11			2,985	429,782			6,621
West Virginia	131		5,539			‡10			26			5,132	34,734		407	
Virginia	151		3,694		221		7,700		37			7,496	85,697		3,898	
North Carolina	328			4,880	3			1,326	6			15,649	66,492			21,855
South Carolina		1		3,877	5			219	16			1,997	77,360			6,093
Georgia	549			7,856		51		1,969	66			17,953	143,341			27,778
Florida		86		5,961	1,093		19,523					7,402	180,895		6,160	
Alabama	526			10,290					26			30,392	362,026			40,686
Mississippi	62			13,077	354		4,200		11			30,964		147,907		39,841
Louisana		117	7,603					1,493				11,885	16,150			5,775
Texas	1,291		58,796		61			22,705	344		18,072		666,023		54,163	
Arkansas	223		23,454		1,058		46,600			23		5,614	305,074		64,440	
Missouri		177	2,740							‡1		77,050	454,603			74,301
Tennessee	655			6,626				2,837		75		29,350		21,935		38,813
Kentucky	512			6,841		‡5				26	11,847		319,271		5,006	
Ohio		130		16,002		65	193		251		53,461		3,269,494		37,652	
Indiana		80		7,735					54			25,287	516,717			33,022
Illinois		44		954					254			18,596	757,587			19,550
Michigan		260		5,625	15		642		70			17,812		92,638		22,795
Wisconsin		142		3,795					163			8,020	80,621			11,815
Iowa	32		3,380						135			58,026	235,170			55,546
Minnesota	107		2,473						35			25,770	12,908			23,297
Nebraska	1,174		59,046						50			31,453	500,347		27,593	
Kansas		132	12,016						39			36,702	136,858			24,686

Nevada	80		50,540									471	198,449		50,669	
California	77		20,286			50		100	120		31,061		188,689		51,247	
Oregon	275		23,336									2,234	150,729		21,102	
Washington Territory		51	3,984		59		8,287			‡1		634	44,397		11,637	
Idaho Territory	34		4,583										10,316		4,583	
Montana Territory		171	10,786										48,852		10,786	
Dakota Territory	639		53,989									492	291,980		53,497	
Wyoming Territory	255		112,809										263,264		112,809	
Utah Territory	52		16,449						23		46		92,518		16,495	
Colorado Territory	448		53,416						23		6,243		79,827		59,659	
Indian Territory	153		14,936										29,640		14,936	
New Mexico Territory	300		155,899										496,280		155,899	
Arizona Territory		329	36,759										22,386		36,759	
Total	8,220	2,198	739,965	127,536	3,005	203	91,875	31,351	*2,358	160	245,882	735,080	11,713,570	630,027	900,682	716,927
	2,198		127,536		203		31,351		160			245,882	630,027		716,927	
Increase	6,022		612,429		2,802		60,524		2,198				11,083,543		183,755	
Decrease												489,198				

* No. 352. Nashua to Acton, 23.44 miles, discontinued.
† No. 758. Boston to Hull, 15 miles, mail carried without cost to the Department.
‡ Corrected distance.

THOS. J. BRADY,
Second Assistant Postmaster-General.

E.—*Table showing the weight of the mails, the speed with which they are conveyed, the accom on railroad-routes in States in which the contract-term expired June* 30, 1877, *and also is of the pay in accordance with the act of March* 3, 1873; *and used also in accordance with*

ABBREVIATIONS.—f. f., fixtures and furniture; f. f. c., fixtures and furniture complete; m. c., mail-catchers; triple line; q. l., quadruple line; l., line or lines; m., miles; r. a., route-agents; m. m., mail-messengers. in the "Remarks" column refer to the order of the routes in this table.

Order.	State.	Number of route.	New number of route.	Termini.	Corporate title of company carrying the mail.	Length of route.	Miles per hour.
						Miles.	
1	N. Y..	1241	.....	Buffalo, Toledo	Lake Shore and Michigan Southern.	298	.....
2	N. Y..	1217	.....	Albany, Buffalo	New York Central and Hudson River.	298	30
3	N. Y..	1211	.....	New York, Albany	.....do	144	30
4	Ohio..	21007	.....	Elyria, Millbury	Lake Shore and Michigan Southern.	74.98	28
5	N. J..	7004	.....	New York, West Philadelphia.	Pennsylvania	90	30
6	N. Y..	1241	.....	Elkhart, Chicago	Lake Shore and Michigan Southern.	101	.....
7	Ohio..	21045	.....	Toledo, Elkhart	.....do	133.6	28
8	Ohio..	21045	.....	.....do	.....do	133.6	29
9	N. Y..	1241	6052	Buffalo, Toledo	.....do	298	29
10	Mass.	605	3025	Boston, Springfield	Boston and Albany	97.78	30
11	Mass.	605	3025	Boston, Albany	.....do	201.65	30
12	N. Y..	1241	6052	Elkhart, Chicago	Lake Shore and Michigan Southern.	101	29
13	N. Y..	1211	.....	New York, Troy	New York Central and Hudson River.	150	.....
14	N. Y..	1241	.....	Buffalo, Chicago	Lake Shore and Michigan Southern.	542	.....
15	Pa....	8001	.....	Philadelphia, Pittsburgh	Pennsylvania	353.6	28
16	Conn.	907	5006	New Haven, New York	New York, New Haven, and Hartford.	73.78	28.5
17	N. Y..	1241	6052	Buffalo, Chicago	Lake Shore and Michigan Southern.	542	29
18	Conn.	905	5005	New Haven, Springfield	New York, New Haven, and Hartford.	62.91	30¼
19	N. Y..	1201	6001	New York, Dunkirk	Erie	459	30.35
20	Mass.	605	3025	Springfield, Albany	Boston and Albany	103.87	30
21	Ohio..	21007	.....	Elyria, Millbury	Lake Shore and Michigan Southern.	74.98	29
22	Ohio..	21032	.....	Columbus, Pittsburgh	Pittsburgh, Cincinnati, and Saint Louis.	193	28

modations for mails and agents, the trips per week, and the rates of pay per mile per annum, other States and Territories, the returns having been obtained with a view to the readjustment the act of July 12, 1876, *in the case of readjustments taking effect on and after July* 1, 1876.

r. p. o., railway post-office; apt., apartment; b. c., baggage-car; s. l., single line; d. l., double line; t. l., A number followed by an asterisk (*) shows the equivalent in round trips. The figures in parentheses

Whole weight carried any distance for thirty days.			Average weight carried whole distance.		Size, &c., of mail-car or apartment.	Trips per week.	Pay per mile per annum.	Remarks.	Order.
Outward.	Inward.	Total.	30 days, total.	Per day, total.					
Lbs.	*Lbs.*	*Lbs.*	*Lbs.*	*Lbs.*	*Feet and inches.*		*Dolls.*		
.....	.....	.....	1084956	36164	r. p. o., 40 by 9, 40 by 9, 50 by 9, 36 by 9, 40 by 9, 1 l. each.	16*	989 75	Part; res. $817.50, $199.25, (6, 63.) In Nov., 1876, 34.2 m. at $1,001, and 79.3 m. at $197.37½.	1
1111992	457126	1569118	1166112	38870	r. p. o., 47.7 by 9, 44.7 by 8.6, 44.10 by 8.8, 48.6 by 9.6, 48.9 by 9.7, 46.2 by 8.8, (average,) 46.9 by 8.11, s. l.	38¾*	944 20	30 days, from Nov. 15, 1876.	2
.....	.....	.....	1082297	36076	r. p. o., 47.7 by 9, 44.7 by 8.6, 44.10 by 8.8, 48.6 by 9.6, 48.9 by 9.7, 46.2 by 8 8, (average.) 46.9 by 8.11, s l.	46¼*	905 50	In Nov., 1876. Part; res. $126, (104.)	3
386914	94574	481488	467891	15596	r. p. o., 40 by 9, 40 by 9, 50 by 9, 18 by 9, ½ l. each.	9*	885 62½	In Nov., 1876	4
1536400	677164	2213564	2086623	69554	r. p. o., 60 by 2 l., tender 29 by ½ L.; r. p. o., 45 by 2 l.	98*	839 30	In Mar., 1877	5
.....	.....	.....	913342	30444	r. p. o., 40 by 9, 40 by 9, 50 by 9, 36 by 9, 36 by 9, 1 l. each.	16*	817 50	Part; res. $1,001, $989.75, $199.25, $197.37½, (1, 63.)	6
578808	154413	733221	701377	23385	r. p. o., 40 by 9, 40 by 9, 50 by 9, 1 l. each.	12	791 00	In Nov., 1876.	7
1256210	463566	1719776	1634453	27240	r. p. o., 50 by 9, 60 by 9, 50 by 9, 1 l. each.	13	730 90	60 days, in Feb. and Mar., 1877.	8
.....	.....	.....	2295394	38255	r. p. o., 50 by 9, 40 by 9, 60 by 9, 50 by 9, 1 l. each.	19*	667 60	60 days, in Feb. and Mar., 1877. Part; res. $601.20, $313, (12, 23.)	9
.....	.....	.....	745499	24849	r. p.o ,25 by 8, 35.10 by 8, f.f. c., d. l.; r. a. apt., 14 by 6.9, s.l. to South Framingham.	41⅔*	619 50	Part; res. $360.60, (20).	10
615527	497499	1113026	550147	18338	r. p. o., 14 by 6.9, 25 by 8, 35.10 by 8, 28.2 by 9, f. f. c., d. l.	41⅔*	619 50	102 m. at $360.60; 1.35 m. decrease. See parts.	11
.....	.....	.....	1946318	32437	r. p. o., 50 by 9, 50 by 9, 36 by 9, 40 by 9, 60 by 9, 1 l. each.	19*	601 20	60 days, in Feb. and Mar., 1877. Part; res. $667.60, $313, (9, 23.)	12
906912	341281	1248193	.....	.....	.....	46¼*	597 00	See parts. In Nov., 1876.	13
2234389	764369	2998758	.....	.....	.....	16*	553 17	See parts. In Nov., 1876.	14
1353734	440706	1794440	1456422	48547	r. p. o., 60 by —, 29 by 8½, 2 l. each.	42*	548 00	In Mar., 1877	15
647281	527116	1174397	1095065	36502	r. p. o., 35.10½ by 8.9; 24.10 by 8.8½, f. f. c. and m. c., d. l.; r. a. apt., 14.10 by 6.5, f. f. c. and m. c., d. l.	57¾*	535 50	2.55 m. decrease	16
4268728	1933216	6201944	1739173	28985	.....	19*	507 17	60 days, in Feb. and Mar., 1877. See parts.	17
342872	558554	901426	726046	24201	r. p. o., 35.10½ by 8.9, 24.10 by 8.8½, f. f. c. and m. c., d. l.	40½*	447 30	Main route. Branch $45, (430;) .92 m. decrease.	18
1223273	425728	1649001	738733	12312	r. p. o., 50 by 10, f. f. c., d. l. to Hornellsville, 332 m., s. l. res., 127 m.; r. a. apt., 16.5 by 7, f. f., s. l. to Port Jervis, 88.25 m.; 13 by 9.4, (average,) f.f., s.l. Elmira to Corning, 17.50 m.	17½*	379 70	60 days, in Feb. and Mar., 1877. $339.70 for 127 m.	19
.....	.....	.....	365203	12173	r. p. o., 28.2 by 9, f. f. c., d. l.	41⅔*	360 60	Part; res. $619.50, (10).	20
550608	392406	943014	909130	15152	r. p. o., 50 by 9, 18 by 8.6, 60 by 9, 50 by 9, ½ l. each.	19	349 42	60 days, in Feb. and Mar., 1877.	21
436108	1489976	1926084	1794782	29913	r. p. o., 60 by —, 60 by —, 60 by —, 50 by —, 1 l. each.	14	343 80	60 days, in Feb. and Mar., 1877. Main route; branch $45.	22

E.—*Table showing the weight of the mails, the speed with which they*

Order.	State.	Number of route.	New number of route.	Termini.	Corporate title of company carrying the mail.	Length of route.	Miles per hour.
						Miles.	
23	N. Y..	1241	6052	Toledo, Elkhart	Lake Shore and Michigan Southern.	143	29
24	Md ...	10003	.....	Baltimore, Wheeling	Baltimore and Ohio	393.17	25
25	Md ...	10003	.....	.....do	.....do	393	27
26	N. Y..	1201	.....	New York, Dunkirk	Erie	459	32
27	Ohio ..	21019	.....	Toledo, Quincy	Toledo, Wabash and Western.	476	30
28	Ill	23031	.....	East Saint Louis, Terre Haute.	Terre Haute and Indianapolis	165.4	34
29	Ohio ..	21027	.....	Cincinnati, Xenia	Pittsburgh, Cincinnati and Saint Louis.	65.96	28
30	Ohio ..	21014	.....	Columbus, Cincinnati	Columbus and Cincinnati	130.48	28
31	Ohio ..	21014	.....	Columbus, Xenia	Columbus and Xenia	55	28
32	Ind ...	22002	.....	Indianapolis, Terre Haute ..	Terre Haute and Indianapolis.	73	34
33	Ohio ..	21042	.....	Cleveland, Cincinnati	Cleveland, Columbus, Cincinnati and Indianapolis.	245.25	30
34	N. H..	251	1001	Concord, Nashua	Concord	36.28	27
35	N. Y..	1207	6007	Attica, Corning	Erie	111	30
36	Va....	11001	.....	Washington, Richmond	Richmond, Fredericksburg and Potomac.	131	27
37	Ohio ..	21015	.....	Columbus, Indianapolis	Culumbus, Chicago and Indiana Central.	188	27
38	Ohio ..	21028	.....	Cincinnati, Parkersburg	Marietta and Cincinnati	195.15	30
39	Ohio ..	21028	.....	.....do	.....do	195.15	30
40	W. Va.	12002	.....	Grafton, Parkersburg	Baltimore and Ohio	104.58	31
41	Ohio ..	21042	.....	Cleveland, Cincinnati	Cleveland, Columbus, Cincinnati and Indianapolis.	245.25	34
42	Ind ...	22003	.....	Indianapolis, Cincinnati	Indianapolis, Cincinnati and La Fayette.	113.5	33
43	Ind ...	22005	.....	Indianapolis, La Fayette	.....do	65¼	33
44	W. Va.	12002	.....	Grafton, Parkersburg	Baltimore and Ohio	104.58	29
45	Pa....	8075	.....	Allentown, Harrisburg	Philadelphia and Reading	90	25
46	Ohio ..	21001	.....	Bellaire, Columbus	Central Ohio	137¼	25
47	Ohio ..	21001	.....	Bellaire, Newark	.....do	104¼	25
48	Mo ...	28001	.....	Saint Louis, Atchison	Missouri Pacific	329.75	25
49	Va....	11002	.....	Alexandria, Lynchburg	Washington City, Virginia Midland and Great Southern.	171.35	23
50	Va....	11018	.....	Washington, Alexandria	Alexandria and Washington	7	17
51	Me ...	2	5	Waterville, Bangor	Maine Central	55.57	25

are conveyed, the accommodations for mails and agents, &c.—Continued.

Whole weight carried any distance for thirty days.			Average weight carried whole distance.		Size, &c., of mail-car or apartment.	Trips per week.	Pay per mile per annum.	Remarks.	Order.
Outward.	Inward.	Total.	30 days, total.	Per day, total.					
Lbs.	*Lbs.*	*Lbs.*	*Lbs.*	*Lbs.*	*Feet and inches.*		*Dolls.*		
.....	.....	.....	432931	7215	r. p. o., 36 by 9, 40 by 9, 1 l. each.	19*	313 00	60 days, in Feb. and Mar., 1877. Part; res. $667.60, $601.20, (9, 12.)	23
656855	215538	872393	364163	12138	r. p. o., 51.7½ by 8.10, f. f., d. l. to Grafton, 294 m., s. l. res., 99.17 m.; r. a. apt., 16 by 8.6, s. l. Baltimore to St. Denis, Point of Rocks to Harper's Ferry, Grafton to Wheeling, 120 m.	22*	305 90	$265.90 on 99 m. In April, 1877, .17 m. increase.	24
446730	246480	693210	273867	9128	r. p. o., 51.7½ by 8.10. f. f. c., d. l. to Grafton, 294 m., s. l. res., 99 m.; apt. in b. c., 16 by 8.6, f. f.; no r. a. 99 m.	32¼*	297 80	In Oct., 1876. $257.80 f r 99 m.	25
703446	231404	934850	469797	15659	r. p. o., 50 by 10, f. f., d. l. to Hornellsville, 332 m., s. l. res., 127 m.; r. a. apt., 16.5 by 7, f. f., s. l. to Port Jervis, 87 m.	17⅞*	292 00	127 m. at $252. In Nov., 1876.	26
292949	165725	458674	210254	7008	r. p. o., 50 by 8.10, f. f., s. l..	12	273 00	In Nov., 1876. Main route; branches $81, $54, (212.)	27
822641	812835	1635476	1023890	17064	r. p. o., 60 by —, 50 by —, 2 l. each.	19	272 00	60 days, in Feb. and Mar., 1877.	28
.....	.....	.....	764270	12737	r. p. o., 60 by —, f. f., d. l...	14	266 80	60 days, in Feb. and Mar., 1877.	29
617958	256408	874366	764270	12737	r. p. o., 60 by —, f. f., d. l....	14	265 90	60 days, in Feb. and Mar., 1877.	30
.....	.....	.....	764270	12737	r. p. o., 60 by —, f. f, d. l....	14	265 90	60 days, in Feb. and Mar., 1877.	31
883991	233937	1117928	1085100	18085	r. p. o., 60 by —, 50 by —, 2 l. each.	19	265 00	60 days, in Feb. and Mar., 1877.	32
448450	323154	771604	354611	5910	r. p. o., 39.2 by 9.2, f. f, d. l. to Galion, 80 m., s. l. res., 165.25 m.	26⅞*	260 60	60 days, in Feb. and Mar., 1877. 165.25 m. at $235.60.	33
75518	118083	193601	152960	5098	r. p. o., 41.9 by 8.8, 22.8 by 6.10, 21 by 6.6, f. f., d. l.; r. a. apt., 17 by 6.10, f. f., q. l. to Manchester, 18.26 m.	37½*	250 00	.28 m. increase.....	34
31519	35869	67388	31421	1048	13 by 9.2, f. f., s. l.....	31⅛*	247 50	.....	35
268694	109476	378170	361642	12054	r. p. o., 42.8 by 10, f. f., d. l..	13	243 50	.....	36
864532	284375	1148907	1037216	17286	r. p. o., 60 by —, 50 by —, 1 l. each.	14	243 40	60 days, in Feb. and Mar., 1877.	37
126279	141114	267393	201540	6718	r. p. o., 52.4 by 9, f. f., s. l...	14	243 40	In Oct., 1876.....	38
187358	119575	306933	243047	8101	r. p. o., 52.4 by —, f. f. c., s. l.	15¼*	238 90	In April, 1877	39
131872	78292	210164	188707	6290	r. p. o., 51.7½ by 8.10, f. f., s. l.	26	236 20	In Oct., 1876..... ..	40
312010	185422	497432	205910	6863	r. p. o., 39.2 by 9.2, f. f., d. l. to Galion, 80 m., s. l. res., 165.25 m.	26⅛*	235 60	80 m. at $260.60. In Nov., 1876.	41
78750	257072	335822	294267	9808	r. p. o., f. f. c., 40 by —, 50 by —, 1 l. each.	19	235 30	In Mar., 1877.....	42
211158	108016	319174	325318	10843	r. p. o., f. f. c., d. l., 40 by —, 50 by —, 1 l. each.	19	234 40	In Mar., 1877.....	43
175004	64933	239937	220221	7340	r. p. o., 51.7½ by 8.10, f. f. c., s. l.; apt., 16 by 8.6, f. f., no r. a.	20	234 40	In April, 1877.....	44
48405	48248	96653	44393	1479	11.9 by 8.7, f. f., s. l.....	26½*	232 00	In Sept., 1876.....	45
115082	85486	200568	.....	.....	.....	18¼*	228 10	33 m., at $85.50. See parts. In Oct., 1876.	46
.....	.....	.....	153489	5116	r. p. o., 50 by 8, f. f. c., s. l..	18¼*	228 10	Part; residue, $85.50, (152.) In Oct., 1876.	47
428543	145650	574193	320903	10696	r. p. o., 50 by 9, f. f. c., d. l. 282 m.; s. l., res., 47.75 m.	13⅞*	228 00	In March, 1877.....	48
131258	61718	192976	141337	4711	r. p. o., 41 by 8.11, f. f. c., s. l.	14	227 50	Main route; branch, $45, (344.) .53 m. increase.	49
114357	48542	162799	162799	5430	r. p. o., 40.8 by 8.6, f. f. c., s. l.	18½*	225 00	.....	50
.....	.....	.....	155218	5174	r. p. o., 44 6 by 8 9, (42.6 by 8.9, old report,) f. f. c., d. l.	10½*	225 00	Part; res., $175, (74)..	51

E.—*Table showing the weight of the mails, the speed with which they*

Order.	State.	Number of route.	New number of route.	Termini.	Corporate title of company carrying the mail.	Length of route.	Miles per hour.
						Miles.	
52	Me ...	2	5	Portland, Bangor	Maine Central	128.10	25
53	Ind ...	22029	.....	La Fayette, Kankakee	Cincinnati, La Fayette and Chicago.	75.75	35
54	Ohio ..	21010	.....	Chicago, Newark	Baltimore and Ohio, (lessees Sandusky, Mansfield and Newark.)	88	27
55	Ohio ..	21010	.....	Sandusky, Newark	.....do	116	27
56	Pa	8077	.....	Easton, Allentown	Lehigh Valley	17.84	27
57	Va ...	17013	.....	Lynchburg, Bristol	Atlantic, Mississippi and Ohio	205	22
58	Ohio ..	21047	.....	Chicago, Ohio, Chicago, Ill ..	Baltimore and Ohio, (operating Baltimore, Pittsburgh and Chicago.)	271.53	31
59	Me ...	5	6	Portland, Cumberland Junction.	Maine Central	11	25
60	Me ...	5	6	Cumberland Junction, Augusta.	.....do	52.28	25
61	Me ...	5	6	Portland, Augusta	.....do	63.28	25
62	Mass ..	648	3067	Springfield, South Vernon Junction.	Connecticut River	50.46	25
63	N. Y ..	1241	.....	Toledo, Elkhart	Lake Shore and Michigan Southern.	143	.....
64	Ind ...	22025	.....	Indianapolis, Terre Haute ..	Indianapolis and Saint Louis ..	72	26¼
65	N. H ..	253	1008	Concord, White River Junction.	Northern	69.64	28
66	Tenn .	19002	.....	Bristol, Chattanooga	East Tennessee, Virginia and Georgia.	242.7	.....
67	Ill	23023	.....	Decatur, Saint Louis	Toledo, Wabash and Western .	112	30
68	Md ...	10002	.....	Baltimore, Sunbury	Northern Central	140.7	23½
69	Vt	407	2005	Brattleborough, Bellows Falls	Central Vermont	24.46	25
70	N. Y ..	1208	6008	Buffalo, Hornellsville	Erie	91	33
71	Ohio ..	21005	.....	Cleveland, Sharpsville	Atlantic and Great Western ..	84.40	25
72	Pa	8022	.....	Sunbury, Williamsport	Pennsylvania, (lessees Philadelphia and Erie.)	39.82	22
73	Me ...	9	12	Bangor, Vanceborough	Consolidated European and North American.	113.93	25
74	Me ...	2	5	Portland, Waterville	Maine Central	72.53	25
75	Ohio ..	21002	.....	Pittsburg, Chicago	Pittsburgh, Fort Wayne and Chicago.	469.5	25
76	Mass .	744	3062	Miller's Falls, Brattleborough	Central Vermont	21.38	25
77	Va	11009	.....	Petersburg, Weldon	Petersburg	65.31	22
78	Va	11008	.....	Richmond, Petersburg	Richmond and Petersburg	24.07	29
79	Mass .	622	3063	Lawrence, Manchester	Manchester and Lawrence	27.06	25
80	Mass .	607	3034	Boston, East Thompson	New York and New England.	53	28
81	Mass .	607	3034	Boston, Southbridge	.....do	70.75	28
82	Mass .	645	3055	Fitchburg, Bellows Falls ...	Cheshire	64.65	30

are conveyed, the accommodations for mails and agents, &c.—Continued.

Whole weight carried any distance for thirty days.			Average weight carried whole distance.		Size, &c., of mail-car or apartment.	Trips per week.	Pay per mile per annum.	Remarks.	Order.
Outward.	Inward.	Total.	30 days, total.	Per day, total.					
Lbs.	*Lbs.*	*Lbs.*	*Lbs.*	*Lbs.*	*Feet and inches.*		*Dolls.*		
136604	79942	216546	76468	2548	r. a. apt., 16 by 6.10¼, f. f., s. l. to Waterville, 73.10 m.; r. p. o., 44.6 by 8.9, (say 42 6 by 8.9,) f. f., d. l., res., 55 m.	10½*	225 00	.18 m. decrease. See parts, (51, 74.)	52
177564	105098	282662	271517	9050	r. p. o., 50 by —, 40 by —, f. f. c., d. l.	13	224 50	In March, 1877	53
.....	.....	.....	179058	5968	r. p. o., 51.7½ by 8.10, f. f., a. l.	18*	224 50	Part; residue $67.50, (193.) In Nov., 1876.	54
98725	218377	307102	138590	4619	r. p. o., 51.7½ by 8.10, f. f., a. l., 88 m.; r. a. apt., 20 by 8, f. f., a. l. res.	18*	224 50	28 m. at $67.50. In Nov., 1876. See parts, (54, 193.)	55
108652	51642	160294	105530	3517	22 by 8.6, (1 l.,) 15 by 6, (1 l.,) 10 by 6, (½ l.,) all f. f.	64*	221 40	1.26 m. increase. In September, 1876.	56
80059	41944	122003	94016	3133	r. p. o., 40.1 by 8.7, f. f. c., a. l	14	218 50	.....	57
206241	93447	299688	241737	8057	r. p. o., 51.7½ by 8.10, f. f., a. l	13	215 50	In Nov., 1876	58
.....	.....	.....	281474	9382	r. p. o., 44.6 by 8.9, (say 42.6 by —, old report,) f. f. c., d. l.; apt., 15.10 by 6.7½, f. f., a. l.	20½*	210 00	Part; res. $210, (60)	59
.....	.....	.....	255476	8515	r. p. o., 44.6 by 8.9, (say 42.6 by —, old report,) f. f. c., d. l.; apt., 15.10 by 6.7½, f. f., a. l.	20½*	210 00	Part; res. $210, (59)	60
168404	135353	303757	255362	8511	r. p. o., 44.6 by 8.9, (say 42.6 by —, old report,) f. f. c., d. l.; apt., 15.10 by 6.7½, f. f., a. l.	20½*	210 00	See parts, (59, 60;) main route; branch $120, (106.) .72 m. decrease.	61
86474	70771	157245	114606	3820	r. p. o., 23.4 by 6.5, f. f. c., d. l	23½*	209 50	$300 m. m. .46 m. increase.	62
.....	.....	.....	258591	8619	r. p. o., 36 by 9, 36 by 9, 36 by 9, 40 by 9, 1 l. each.	16*	199 25	Part; res. $1,001, $989.75, $817.50, $197.37½, (1, 6.) In Nov., 1876.	63
31715	23602	55317	47110	1569	39.4 by 9, f. f., a. l	12	196 00	In Sept., 1876	64
74000	48534	122534	100309	3343	r. p. o., 41.9 by 8.8, 22.8 by 6.10, f. f., d. l.	18	190 00	.64 m. increase; $1,150 m. m.; main route; branch $50, (297.)	65
70508	57089	127597	82660	2755	.....	....	189 70	Main route; branch $135, (101.) In Apr., 1877.	66
54258	33540	87798	75707	2523	20 by 9, f. f., a. l	12	187 00	In Nov., 1876. (Under contract.)	67
176948	125894	302842	147746	4924	r. p. o., 44.4 by 8.4, f. f. c., a. l., r. a. apt., 14.8 by 8.7, f. f., a. l.	24*	186 10	.....	68
55743	45182	100925	97941	3264	23.4 by 6.11, f. f., d. l	18	184 50	.46 m. increase	69
163474	469950	633424	543924	9065	13.7 by 9.8, (average,) f. f., a. l.	24½*	180 00	60 days, in Feb. and Mar., 1877.	70
59631	28416	98047	51535	858	14.4 by 7.10, f. f. c., a. l	10½*	180 00	60 days, in Feb. and Mar., 1877; 34.65 m. at $62.10.	71
.....	.....	.....	120910	4030	r. p. o., 39.2 by 8.7, f. f., a. l	13¾*	178 75	Part; res. $102.60, (123.)	72
70005	38014	108019	82210	2740	r. p. o., 20 by 9, f. f., a. l	6	175 00	4.32 m. decrease	73
.....	.....	.....	20839	694	16 by 6.10¼, f. f., a. l	10½*	175 00	Part; res. $225, (51)	74
1026842	432504	1459346	524633	8743	24.3 by 8.11, f. f. c., a. l	21½*	173 70	60 days, in Feb. and Mar., 1877.	75
89814	79336	169150	95117	3170	10.5 by 6.5, f. f., a. l	18	168 75	.38 m. increase	76
51228	105211	156439	151617	5053	43.7 by 8.8½, (size not required by dept.,) 21.6 by 8.8½, f. f. c., d. l.	13	164 80	.19 m. decrease	77
149254	57521	207475	205725	6857	r. p. o., 42 by —, f. f. c., d. l	20	163 80	$150 m. m	78
26437	35503	61940	52438	1747	17 by 7, 12.2 by 6.7, f. f., d. l	18	163 00	.94 m. decrease	79
.....	.....	.....	92092	3069	12.6 by 6.9, f. f., d. l., 53 m.; no r. a. res.	21*	161 10	Part; res. $45.90, (331)	80
68458	45915	114373	71242	2374	12.6 by 6.9, f. f., d. l., 53 m.; no r. a. res.	21*	161 10	See parts, (80, 331.) 17 m. at $45.90. .75 m. increase.	81
43297	23259	66556	54540	1818	24 by 8.8, f. f., a. l	18	160 00	.65 m. increase	82

E.—*Table showing the weight of the mails, the speed with which they*

Order.	State.	Number of route.	New number of route.	Termini.	Corporate title of company carrying the mail.	Length of route.	Miles per hour.
						Miles.	
83	Pa....	8021	.....	Williamsport, Elmira	Northern Central	79.17	23
84	Conn .	904	5004	New Haven, New London...	New York, New Haven and Hartford.	51.71	30
85	Conn .	975	5002	East Thompson, Willimantic	New York and New England..	33.21	28
86	Va....	11006	.....	Richmond, Greensborough..	Richmond and Danville.....	189.67	23
87	Mass .	637	3041	Middleborough, Hyannis....	Old Colony.....	45.29	25
88	Mich .	24001	.....	Detroit, Toledo	Lake Shore and Michigan Southern.	65.27	.....
89	Mass .	609	3038	Boston, Plymouth	Old Colony.....	37.27	25
90	N. J ..	7001	.....	New York, Easton.....	Central, of New Jersey	74	20
91	Conn .	906	5010	New Haven, Williamsburg..	New Haven and Northampton.	85.82	30
92	Ohio ..	21034	.....	Salamanca, Dayton	Atlantic and Great Western ..	389.55	28
92a	Me ...	1	1	Augusta, Waterville.....	Maine Central	19.21	25
93	Mass .	608	3035	Boston, Providence	Boston and Providence.....	44.19	35
94	N. Y..	1227	6036	Rome, Ogdensburg	Rome, Watertown and Ogdensburg.	142	30
95	Me ...	6	7	Portland, Canada Line.....	Grand Trunk	166.31	20
96	N. Y..	1221	6024	Eagle Bridge, Rutland	Delaware and Hudson Canal...	62.50	25
97	N. Y..	1224	6026	Albany, Canada Line	.....do	189.93	30
98	Ala...	17013	.....	New Orleans, Mobile.....	New Orleans, Mobile and Texas	140	26
99	Pa....	8029	.....	New Castle, Homewood	Pittsburgh, Fort Wayne and Chicago.	15.2	25
100	Ind ...	22017	22018	Indianapolis, Peoria	Indianapolis, Bloomington and Western.	212.2	28
101	Tenn .	19002	.....	Cleveland, Dalton.....	East Tennessee, Virginia and Georgia.	28.5	.....
102	N. Y ..	1208	.....	Buffalo, Hornellsville	Erie	91	32
103	R. I...	802	4002	Providence, New London ...	New York, Providence and Boston.	63.94	25
104	N. Y ..	1211	.....	Albany, Troy	New York Central and Hudson River.	6	30
105	Mass .	634	3039	South Braintree Junction, Newport.	Old Colony.....	61.16	25
106	Me ...	5	6	Brunswick, Bath.....	Maine Central	9.05	25
107	N. H..	254	1009	Concord, Claremont Junction.	Concord and Claremont.....	56.80	21
108	Mass .	642	3052	Taunton, New Bedford.....	Boston, Clinton, Fitchburg and New Bedford.	21.90	30
109	Mass .	638	3042	Yarmouth Port, Provincetown.	Old Colony.....	44.56	25
110	N. J ..	7013	.....	New York, Easton	Morris and Essex.....	87.40	25
111	Pa....	8045	8044	Miles Grove, New Castle....	Erie and Pittsburgh	83.6	25
112	N. Y..	1258	6066	Rouse's Point, Canada Line.	Champlain and Saint Lawrence	2.25	25
113	Cal ...	46003	.....	Roseville, Redding.....	Central Pacific.....	151.45	22
114	Pa....	8002	.....	Philadelphia, Pottsville.....	Philadelphia and Reading.....	92.5	22½
115	Mass .	641	3051	Taunton, Mansfield Junction.	Boston, Clinton, Fitchburg and New Bedford.	11.92	30
116	Pa....	8075	8073	Allentown, Harrisburg.....	Philadelphia and Reading.....	90	24

conveyed, the accommodations for mails and agents, &c.—Continued.

...le weight carried any distance ... thirty days.		Average weight carried whole distance.		Size, &c., of mail-car or apartment.	Trips per week.	Pay per mile per annum.	Remarks.	Order.
Inward.	Total.	30 days, total.	Per day, total.					
Lbs.	*Lbs.*	*Lbs.*	*Lbs.*	*Feet and inches.*		*Dolls.*		
22792	46412	35914	1197	14 8 by 8.6, f. f., a. l	18	160 00	1.17 m. increase	83
53907	157601	142644	4754	12.4½ by 6.10, f. f., a. l	31	157 50	$67 m. m. 1.71 m. increase.	84
52260	110240	96843	3228	12.6 by 6.9, f. f., d. l	21*	157 50	$96 m. m. .47 m. decrease.	85
50324	160459	130028	4334	25 by 8.9, f. f., a. l	10½*	153 00	.09 m. increase	86
39298	90411	61558	2151	14 by 8.4, 10.2 by 6, f. f., d. l.	12	153 00	$1,000 m. m. 1.71 m. decrease.	87
81035	125679	120050	4001	28 by 8.6, f. f, a. l	6½*	150 00	In June, 1876. "Fast mail."	88
72525	171011	57003	1900	in b. c.; no r. a	36½*	150 00	Main route; branch $50, (308.) .73 m. decrease.	89
44975	126149	73010	2433	13.11 by 6.11, f. f., d. l	12	144 00		90
39783	85800	48995	1633	15.5 by 6.5, f. f., d. l	18	144 00	Main route; branch $45, (354.) .34 m. increase.	91
142631	308720	53332	888	14.4 by 7.10, f. f. c., a. l	15*	144 00	60 days, in Feb. and Mar., 1877.	92
.....	.....	172188	5739	r. p. o., 44.6 by 8.9, say 42.6 by —, (see old report,) f. f. c., d. l.	12	140 00	Part; res. $90, (146)	92a
67844	141329	105625	3520	14.8 by 6, f. f., d. l	36	138 60	.19 m. increase	93
52160	139147	70136	2337	24 by 7.6, f. f., a. l	15*	138 00	Main route; branch $62.50, (211.)	94
24408	64018	27813	927	19.9 by 8, f. f, a. l	9½*	138 00	1.31 m. increase	95
20166	46505	20469	682	12.3 by 6.7, f. f., a. l	6	137 70	11.5 m. at $146.70	96
51665	150073	63588	2119	21.6 by 6.10, f. f., a. l	16⅔*	136 80	Main route; branches $90, $67.50, (144, 185.)	97
51859	92380	83740	2791	17.6 by 7.3, f. f., d. l	14	135 00	In Feb., 1877	98
38886	56893	53029	1767	12 by 9, f. f., a. l	12	135 00	.2 m. increase	99
39182	83272	34509	1150	18 by 9, f. f., a. l	18	135 00	In Oct., 1876	100
11038	32345	30931	1031	.....	....	135 00	Branch; main route $189.70, (66.)	101
142258	214062	173157	5771	14 by 9.2, 14 by 9.3, 12 6 by 9.10, (average,) 13.6 by 9.5, f. f., a. l.	23½*	133 00	In Nov., 1876	102
87174	144665	115922	3864	16 by 6.10, f. f., a. l	31⅓*	130 50	.19 m. increase	103
.....	.....	127837	4261	no r. a	46½	126 00	In Nov., 1876. Part; residue $905.50, (3.)	104
52700	120836	41746	1391	14 by 8.4, 14 by 8.4, 10.2 by 6.6, 10.2 by 6.6, (average, 12.1 by 7.6,) f. f., d. l. 22.82 m.; no r. a. res., 38.34 m.	13½*	126 00	.59 m. decrease; $930 m. m.	105
11119	33039	33039	1101	15.10 by 6.7½, f. f., a. l	18	120 00	Branch; main route $210, (61) .05 m. increase.	106
8925	19691	7569	252	12 by 7, f. f., d. l. in summer; a. l. in winter, say 6 months in each year.	12	120 00	$400 m. m.; 1.81 m. increase.	107
9704	23099	22637	754	no r. a	36	119 70	$612.50 m. m.; 1.39 m. increase.	108
24488	54225	41790	1393	14 by 8.4, 10.2 by 6, f. f., d. l.	12	118 00	$4,000 m. m.; .52 m. decrease.	109
54300	138539	54357	1811	11.6 by 9, f. f., d. l	14½*	117 90	19 m. at $126.90; 14.40 m. at $54.	110
38775	63951	37460	1248	12 by 9, f. f., a. l	12	117 00	.6 m. increase	111
829	13685	13685	456	in b. c; no r. a	13	116 66		112
16569	71924	51441	1714	20.8½ by 8.10½, f f., a. l	7	112 50	In Oct., 1876	113
39431	93347	42177	1405	15.2 by 8.7, f. f., a. l. to Auburn, 83 m.; d. l. res., 9.5 m.	17½*	112 50		114
21205	36137	35049	1168	no r. a	30	112 50	$600 m. m.; .08 m. decrease.	115
46485	89706	47293	1576	11.9 by 8.7, f. f., d. l. to Emaus, 6 m.; a. l. res., 84 m.; additional r. a. between Reading and Sinking Spring, 6 miles.	28½*	110 70		116

E.—*Table showing the weight of the mails, the speed with which they*

Order.	State.	Number of route.	New number of route.	Termini.	Corporate title of company carrying the mail.	Length of route.	Miles per hour.
						Miles.	
117	R. I...	801	4001	Providence, Worcester.....	Providence and Worcester....	44.17	30
118	N. Y..	1255	6063	Canandaigua, Elmira.....	Northern Central	68.50	25
119	Conn .	902	5009	New London, Palmer	Central Vermont.....	65.27	22½
120	Conn .	908	5011	Bridgeport, Winsted.....	Naugatuck	62.28	23
121	Pa....	8010	.....	Allentown, Waverly	Lehigh Valley.....	190.67	27
122	Pa....	8022	.....	Sunbury, Erie.....	Pennsylvania, (lessees Philadelphia and Erie.)	287.6	22
123	Pa....	8022	.....	Williamsport, Erie.....	.....do	248.08	22
124	N. J ..	7028	.....	New York, Denville	Delaware, Lackawanna and Western.	35.93	25
125	N. Y..	1219	.....	New York, Chatham Village	New York and Harlem	130½	25
126	N. Y..	1256	6064	Syracuse, Oswego	Oswego and Syracuse.....	35.5	25
127	Me ...	13	15	Bath, Rockland	Knox and Lincoln	49.86	18
128	N. J ..	7018	.....	Philadelphia, Bridgeton.....	West Jersey.....	38.40	25
129	N. Y..	1823	6033	West Chazy, Rouse's Point .	Delaware and Hudson Canal .	15.29	30
130	Pa....	8064	8063	Pittsburgh, Cumberland	Pittsburgh and Connellsville..	150.10	25
131	Mass .	607	3034	Boston, East Thompson.....	New York and New England.	53	28
132	Mass .	607	3034	Boston, Southbridge	.....do	70	28
132a	Mass .	607	3034	East Thompson, Southbridge	.....do	17	28
133	Mass .	643	3066	Worcester, Nashua	Worcester and Nashua	46.54	30
134	Ohio..	21005	.....	Cleveland, Leavittsburg	Atlantic and Great Western..	49.75	25
135	Ohio..	21005	.....	Cleveland, Sharpsville	.....do	84.40	25
136	N. Y..	1245	6023	Albany, Binghamton	Delaware and Hudson Canal..	142	24
137	Vacant	.....	.....	.....	.....	.....	.....
138	Me ...	1	1	Augusta, Skowhegan	Maine Central	37.99	25
139	Pa....	8042	8041	Pittsburgh, Oil City.....	Allegheny Valley.....	132.60	23
140	Mich .	24007	.....	Detroit, Port Huron.....	Grand Trunk	64.5	23
141	N. Y..	1257	6065	Syracuse, Binghamton	Syracuse, Binghamton and New York.	80	24
142	N. H..	371	1012	Nashua, Rochester	Worcester and Nashua.....	49.40	25
143	Mass .	647	3061	Palmer, Miller's Falls	Central Vermont	34.95	25
144	N. Y..	1224	6026	Whitehall, Castleton.....	Delaware and Hudson Canal..	16	25
145	Md ...	10017	.....	Saint Denis, Point of Rocks.	Baltimore and Ohio.....	60	19
146	Me ...	1	1	Waterville, Skowhegan	Maine Central	18.78	25
147	Md ..	10004	.....	Araby, Frederick	Baltimore and Ohio.....	3.75	20
148	Ohio..	21034	.....	Salamanca, Dayton.....	Atlantic and Great Western..	389.55	27
149	N. J ..	7005	.....	Bordentown, Trenton	Pennsylvania.....	7	35
150	Ga...	15012	.....	Macon, Atlanta	Central Railroad and Banking Company.	103.52	23
151	Conn .	909	5012	Bridgeport, Pittsfield	Housatonic	110.55	27
152	Ohio..	21001	.....	Newark, Columbus	Central Ohio.....	33	25

are conveyed, the accommodations for mails and agents, &c.—Continued.

Whole weight carried any distance for thirty days.			Average weight carried whole distance.		Size, &c., of mail-car or apartment.	Trips per week.	Pay per mile per annum.	Remarks.	Order.
Outward.	Inward.	Total.	30 days, total.	Per day, total.					
Lbs.	*Lbs.*	*Lbs.*	*Lbs.*	*Lbs.*	*Feet and inches.*		*Dolls.*		
33655	31706	65361	30866	1028	(average,) 13.2 by 6.1., f. f., a.l.	24*	110 00	$1,500 m. m.; .17 m. increase.	117
25736	31240	56976	36955	1231	14.8 by 8.6, f. f., a. l	18	108 90	.....	118
30179	26104	56283	19067	635	11 by 6 4, f. f., a. l	21*	108 00	.27 m. increase	119
37593	27595	65188	37065	1235	16 by 6.1½, 15.10 by 5.8, f. f., a. l.	12	106 20	Main route; branch $45, (386;) $150 m. m.; .28 m. increase.	120
111233	68790	180023	84935	2830	22 by 8.6, (1 l.,) 15 by 6, (1 l.,) 10 by 6, (½ l.,) to Mauch Chunk, 30 m.; 22 by 8.6, (1 l.,) res., all f. f.	20½*	105 00	In Sept., 1876; 55 m. at $115; 29.5 m. at $120, 1.17 m. increase.	121
143589	90545	234134	38830	1294	r. p. o., 39.2 by 8.7, f. f., a. l. 39.82 m.; r. a. apt., 8.10 by 5.7, 10 8 by 8.8, a. l.	13¾*	102 60	$178.75 per m. on 39.8 m.; .3 m. increase. See parts (72, 123.)	122
.....	.....	.....	25188	839	r. a. apt., 8.10 by 5.7, 10.8 by 8.8, a. l.	13¾*	102 60	Part; residue $178.75, (72.)	123
33470	17221	50691	44899	1496	17.7 by 7.6, f. f., d. l	12	100 80	.....	124
47729	35215	82944	32364	1078	19.9½ by 8.3, 13.5 by 8.5, f. f., d. l. 66 m.; a. l. res., 64.5 m.	11¾*	100 00	In June, 1876	125
24765	14713	39478	30471	1015	14 by 7, f. f., a. l	18	100 00	.....	126
23221	15202	38423	25307	843	14.6 by 7.2, 13 by 6.8, f. f., d. l	12	100 00	$1,000 for ferriage; .14 m. decrease.	127
43295	28451	71746	38957	1298	13 by 8.3, f. f., a. l	12	99 00	$600 for side-service	128
28031	8984	37015	36173	1205	21 6 by 6.10, b. f., a. l	12	99 00	.....	129
29081	24553	53634	21153	705	14.6 by 8.6, f. f., a. l	18	98 10	2.30 m. increase. Main route; branches $48.60, (317.) $45, (403.)	130
.....	.....	.....	95604	3186	12.6 by 6.9, f. f., d. l	21*	97 20	In Feb., 1877. Part; whole route $97.20, (132.)	131
65955	51429	117384	73969	2465	12.6 by 6.9, f. f., d. l. 53 m.; no r. a. res.	21*	97 20	See parts. In Feb., 1877, (131, 132*a*.)	132
.....	.....	.....	6520	217	no r. a	21*	97 20	Part; whole route $97.20, (132.) In Feb., 1877.	132*a*
69818	62717	132535	92495	3082	12 by 7, 15 by 7, f. f., d. l	18	96 30	.29 m. increase	133
.....	.....	.....	152389	5079	14.4 by 7.10, f. f., a. l	18*	94 50	Part; res. $61.20, (214;) 34.65 m. at $61.20. In Nov., 1876.	134
31799	134952	166751	95265	3175	14.4 by 7.10, f. f., a. l	18*	94 50	See parts. 34.65 m. at $61.20. In Nov., 1876, (134, 214.)	135
42881	30533	73414	28000	933	15.3 by 8.8¼, f. f., a. l	18	90 90	.....	136
.....	.....	.....	.....	.....	.....	.....	.....	.....	137
123954	64611	188565	92371	3079	r. p. o., 44.6 by 8.9, say 42.6 by —, (see old report;) f. f. c., d. l. to Waterville, 19 m., 15.11 by 7.1, f. f., a. l. 20 m.	12	90 00	See parts; (137, 146;) 1.01 m. decrease.	138
56919	35576	92495	51539	1717	14.6 by 8.8, f. f., a. l	19	90 00	.11 m. decrease	139
32377	17674	50051	40362	1345	23.8 by 7.5, f. f. c., a. l	18	90 00	In Aug., 1876	140
32808	30154	62962	26496	883	16 by 7.3, f., a. l	12	90 00	.....	141
20311	15864	36175	24882	761	12 by 7, d. l	12	90 00	In Aug., 1876	142
15207	9699	24906	17562	585	10.5 by 6.5, f. f., a. l	12	90 00	.05 m. decrease	143
11600	7351	18951	16902	563	in b. c.; a. l	12	90 00	Branch; main route $136.80, (97.)	144
13894	13637	27531	15156	505	16 by 8.6, f. f., a. l	14½*	90 00	In April, 1877	145
.....	.....	.....	12555	418	r. a. apt., 15.11 by 7.1, f. f., a. l.	12	90 00	Part; residue, $90, (92*a*.)	146
5643	4515	10158	10158	338	in b. c	33*	90 00	.75 m. increase	147
205814	73368	279182	79332	2644	14.4 by 7.10, f. f., a. l	15½*	88 20	In Nov., 1876	148
2552	5019	7571	7571	252	in b. c.; no r. a	18	88 00	Branch; main route $81, (160.)	149
45948	64074	110022	87664	1270	11.7 by 6.7, f. f., a. l	13	87 30	69 days, 9 from March 15 and 30 from May 15, 1876, and 30 from Jan. 1, 1877.	150
41038	33058	74096	29306	976	14 by 6.5, f. f., d. l	12	86 40	Main route; branches $45, $27, (392, 493.)	151
6812	15657	22469	22469	748	in b. c.; no r. a	18¼*	85 50	Part; res. $228.10, (47.) In Oct., 1876.	152

E.—*Table showing the weight of the mails, the speed with which they*

Order.	State.	Number of route.	New number of route.	Termini.	Corporate title of company carrying the mail.	Length of route.	Miles per hour.
						Miles.	
153	W.Va	12001	.....	Harper's Ferry, Staunton ...	Baltimore and Ohio.....	128.02	19
154	N. H..	371	1012	Nashua, Rochester	Nashua and Rochester	49.40	23
155	Ga....	15001	.....	Atlanta, Charlotte	Atlanta and Richmond Air Line.	266.5	26
156	Pa....	8017	.....	Scranton, Northumberland..	Lackawanna and Bloomsburg	80	25
157	N. Y..	1233	6045	Long Island City, Greenport	Long Island	94.31	25
158	Mass..	631	3046	South Framingham, Pratt's Junction.	Boston, Clinton, Fitchburg and New Bedford.	29.74	30
159	Mass..	644	3047	Sterling Junction, Fitchburg	.....do	14.15	25
160	N. J...	7005	.....	Philadelphia, Monmouth Junction.	Pennsylvania	54.56	35
161	N. Y..	1233	6045	Mineola, Hempstead	Long Island	2.5	25
162	Me ...	244	13	Bangor, Bucksport	Consolidated European and North American.	19.89	22
163	N. Y..	1229	6041	Utica, Norwich	Delaware, Lackawanna and Western.	54¼	24
164	N. Y..	1230	6042	Owego, Ithaca	.....do	35	21
165	Pa....	8019	.....	Binghamton, New Hampton.	.....do	144.50	25
166	Pa....	8064	.....	Pittsburgh, Cumberland	Pittsburgh and Connellsville ..	147.8	30
167	Pa..	2416 2412†	8016	Penn Haven Junction, Tomhicken.	Lehigh Valley	24.7	25
168	N. J..	7019	.....	Glassborough, Millville	West Jersey.....	22	25
169	Kans .	33008	.....	Kansas City, Ottawa.....	Leavenworth, Lawrence and Galveston.	33.3	20
170	Cal ...	16018	.....	San Fernando, San Bernandino.	Southern Pacific	81.12	15
171	Mo....	28018	.....	Keokuk, Louisiana	Saint Louis, Keokuk and Northwestern.	86.80	20
172	W.Va	12001	.....	Harper's Ferry, Harrisonburg.	Baltimore and Ohio	101.60	19
173	N. J...	7037	.....	New York, Middletown	New Jersey Midland.....	88	22
174	Pa....	8008	.....	Lamokin, Port Deposit.....	Philadelphia and Baltimore Central.	59.25	25
175	Conn .	911	5007	Waterbury, Providence	Hartford, Providence and Fishkill.	122.94	22
176	N. J...	7008	.....	Trenton, intersection Delaware, Lackawanna and Western Railroad.	Pennsylvania	68.7	25
177	N. Y..	1205	6005	Rochester, Avon.....	Erie	18	30
178	N. Y..	1247	6056	Schoharie Junction, Schoharie.	Schoharie Valley	4.38	25
179	Colo ..	38001	.....	Denver, El Moro.....	Denver and Rio Grande.....	209.2	20
180	Ga....	15010	.....	Savannah, Macon	Central Railroad and Banking Company.	192½	22‡
181	Kans .	33005	.....	Kansas City, Baxter Springs	Missouri River, Fort Scott and Gulf.	160.2	20
182	N. Y..	1813	6098	Gloversville, Northville.....	Gloversville and Northville...	17¾	20
183	N. Y..	1813	6098	.....do	.....do	17¾	20
184	Me ...	34	3	Farmington, Brunswick	Maine Central	69.5	20

† Part. ‡ Average.

are conveyed, the accommodations for mails and agents, &c.—Continued.

Whole weight carried any distance for thirty days.			Average weight carried whole distance.		Size, &c., of mail-car or apartment.	Trips per week.	Pay per mile per annum.	Remarks.	Order.
Outward.	Inward.	Total.	30 days, total.	Per day, total.					
Lbs.	*Lbs.*	*Lbs.*	*Lbs.*	*Lbs.*	*Feet and inches.*		*Dolls.*		
27400	16381	43781	13480	449	16 by 8.6, f. f., s. l	7½*	83 00	In April, 1877. See parts, (172, 348.)	153
41850	31114	72964	61314	2043	12 by 7, 15 by 7, f. f., d. l.	12	81 00	.....	154
32765	53967	86732	58396	1946	19.6 by 8.11¾, f. f., m. c., s. l	7	81 00	In April, 1877	155
26454	32640	59094	29606	986	19 by 7, f. f., s. l	21½	81 00	.....	156
38085	23604	61689	27833	927	13 by 6, f. f., s. l	12	81 00	Main route; branch $81, (161;) $2,000 m. m. 3.69 m. decrease.	157
20830	14791	35621	21838	727	14 by 6.9, f. f., s. l	20*	81 00	.74 m. increase	158
16612	10966	27578	18305	610	14 by 6.9, f. f., s. l., 9 m.; no r. a. res.	29½*	81 00	.15 m. increase	159
25934	25708	51692	17790	593	8 by 6.6, f. f., s. l.; r. a., 12 inward; 6 outward, between Jamesburg and Monmouth Junction, 5.76 m.	20¼*	81 00	Main route; branches, $88, $45, (149, 442.) 1 m. increase. Extension to commence at Philadelphia, July 1, 1877.	160
1321	967	2288	2288	76	in b. c.; no r. a	18	81 00	Branch; main route, $31, (157.)	161
13857	9188	23045	19820	660	16.8 by 8.3., f. f., d. l.	12	80 10	.54 m. increase	162
31924	19690	51614	28839	960	15.6 by 7, f. f., d. l.	12	80 00	.....	163
13514	8937	22451	18826	627	7.9 by 7.6, f. f., s. l	12	80 00	.....	164
34023	47302	81325	36538	1217	19 by 7, f. f., s. l	12	76 50	.....	165
32840	32584	65424	35613	1187	14.6 by 8.6, f. f, s. l.	16¾*	76 50	Main route; branches, $48.60. $45, (318, 410a.) In October, 1676.	166
17931	12018	29949	18250	608	15 by 6.6, f. f., d. l. to Hazleton, 15.9 m.; s. l. res.	14¾*	76 50	Main route; bran's, $67.50, $67.50, (195, 197.) 8 m. at $75. In September, 1876.	167
14280	9033	23313	17962	598	13 by 8.3, f. f., s. l	12	76 50	.....	168
26351	10773	37124	34730	1157	15 by 9, f. f., s. l	6	75 60	In April, 1877	169
25160	12137	37297	16064	534	no r. a	6	75 00	In September, 1876	170
13954	20784	34738	15917	530	18.6 by 9, s. l	12	75 00	In January, 1877	171
21046	11416	32462	14744	491	16 by 8.6, f. f., s. l	7½*	74 70	1.13 m. increase Part: residue, $45, (348.)	172
11001	10654	21655	6862	22-	13.2 by 6.9, f. f. and m. c s. l.	6½*	74 70	.....	173
21551	27317	48868	25832	861	9 by 3.6, 10 by 6.6, f. f., d. l.	12	73 80	.....	174
47305	47219	94524	24557	818	14.2 by 6.6, f. f., s. l	16⅔*	72 00	.44 m. increase	175
31033	19915	50948	23318	777	13 by 6.6, f. f., s. l	13¾*	72 00	.....	176
12823	8025	20848	20033	668	11.5 by 10.2, f. f., s. l.	22*	72 00	.....	177
4517	2717	7234	7234	241	in b. c.; no. r. a	18	72 00	.....	178
43321	21272	64593	37757	1258	9.2 by 7.5, f. f., s. l	7	70 00	Main route; branch, $45. In March, 1877.	179
44164	39977	84141	40217	591	8.2 by 7, f. f., s. l.	14	69 30	68 days, 8 from March 15 and 30 from May 15, 1876, and 30 from January 1. 1877.	180
66876	36671	103547	45997	1529	15 by 9, f. f., s. l	7¾*	69 12	In April, 1877	181
11182	8743	19925	15659	521	8 by 6, s. l.	12	68 40	$100 m. m. at Mayfield. In January, 1877.	182
9094	7153	16247	12982	432	8 by 6, f. f., d. l	12	68 40	$100 side service, at Mayfield.	183
24855	22243	47098	21322	810	16 by 6.7, f. f., s. l., to Leeds Junction, 39 m.; in charge of conductor, thence to South Lewiston, 12 m.; t. l. Lewiston to Brunswick, 18.5 m.	9½*	67 50	$50 m. m.; 2 m. decrease.	184

E.—*Table showing the weight of the mails, the speed with which they*

Order.	State.	Number of route.	New number of route.	Termini.	Corporate title of company carrying the mail.	Length of route.	Miles per hour.
						Miles.	
185	N. Y..	1224	6026	Albany Junction, Troy.....	Delaware and Hudson Canal..	6	24
186	Pa....	8003	.....	Philadelphia, Westchester..	Westchester and Philadelphia	26.35	18
187	Ga....	15011	.....	Macon, Columbus	Southwestern.....	100.94	20½
188	Ga....	15005	.....	Millen, Augusta	Central Railroad and Banking Company.	53†	18
189	Md ...	10006	.....	Baltimore, Williamsport	Western Maryland	91.62	18
190	Md ...	10007	.....	Annapolis, Annapolis Junction.	Annapolis and Elk Ridge	21.5	25
191	Ind ...	12008	22008	New Albany, Michigan City.	Louisville, New Albany and Chicago.	288	20
192	N. Y..	1288	6088	Carthage, Morristown.....	Utica and Black River	50.08	20
193	Ohio..	21010	.....	Sandusky, Chicago.....	Baltimore and Ohio, (lessees Sandusky, Mansfield and Newark.)	28	27
194	Pa....	8066	8065	Corning, Antrim.....	Fall Brook Coal.....	52.4	17
195	Pa....	2416†	8016	Lumber-yard, Ebervale.....	Lehigh Valley	6.23	25
196	Pa....	2412	8012	Hazel Creek Bridge, Audenreid, Trescow.	.....do	9.5	25
197	Pa....	2416	8016	Tunnel, Eckley.....	.....do	2.23	25
198	Mass .	746	3053	Taunton, Attleboro.....	Boston, Clinton, Fitchburg and New Bedford.	11.12	28
199	Conn .	991	5016	Hartford, Springfield	Connecticut Central, (late Connecticut Valley and Springfield.)	31.67	30
200	Me ...	7	8	Portland, Rochester.....	Portland and Rochester.....	52.68	25
201	N. Y..	1225	6034	Oswego, Richland.....	Rome, Watertown and Ogdensburg.	28.5	30
202	N. Y..	1204	6004	Newburg, Chester	Erie	19.75	28
203	Ga....	15016	.....	Macon, Eufaula.....	Southwestern.....	144.84	18½
204	N. Y..	1273	6081	Fonda, Gloversville.....	Fonda, Johnstown and Gloversville.	10	20
205	Vt....	528	2012	Wells River, Montpelier....	Montpelier and Wells River..	38.78	21
206	Pa....	8027	.....	Lancaster, Middletown	Pennsylvania.....	31.5	28
207	N. Y..	1290	6091	Buffalo, Jamestown.....	Buffalo and Jamestown.....	71.09	30
208	N. Y..	1234	6046	Hicksville, Port Jefferson...	Long Island.....	36.5	25
209	N. Y..	1226	6035	Watertown, Cape Vincent..	Rome, Watertown and Ogdensburg.	26	30
210	Mass .	649	3056	South Vernon Junction, Keene.	Connecticut River.....	24.19	25
211	N. Y..	1227	6036	DeKalb Junction, Norwood.	Rome, Watertown and Ogdensburg.	25	30
212	Ohio..	21019	.....	Clayton, Keokuk	Toledo, Wabash and Western.	44	25
213	N. Y..	1284	6089	Cayuga, Ithaca	Cayuga.....	38.05	20
214	Ohio..	21005	.....	Leavittsburg, Sharpville....	Atlantic and Great Western..	34.65	25

† Part.

are conveyed, the accommodations for mails and agents, &c.—Continued.

Whole weight carried any distance for thirty days.			Average weight carried whole distance.		Size, &c., of mail-car or apartment.	Trips per week	Pay per mile per annum.	Remarks.	Order.
Outward.	Inward.	Total.	30 days, total.	Per day, total.					
Lbs.	*Lbs.*	*Lbs.*	*Lbs.*	*Lbs.*	*Feet and inches.*		*Doll.*		
1689	6467	23365	2158	719	in b. c.; no r. a.	18	67 50	Branch; main route $136 80, (97.)	185
13463	13941	27404	17653	588	41 sq. feet (say 8 by 5), f. f., d. l.	24*	67 50	$102.75 side service. .22 m. increase.	186
50203	31721	81924	4082	544	12.8 by 6.3, f. f., s. l.	7	67 50	75 days; 15 from March 15, 1876; 30 from May 15, 1876; and 30 from January 1, 1877.	187
18427	21396	39823	3416	488	8.2 by 7, f. f., s. l.	7	67 50	70 days; 10 from March 15, 1876; 30 from May 15, 1876; and 30 from January 1, 1877.	188
20991	12669	33660	1451	483	11 by 8.2, f. f., s. l.	12	67 50	6.12 miles at $40	189
6659	10372	17031	1326	442	in b. c. f., s. l.	15*	67 50	1 m. increase	190
29504	33186	62690	12730	424	11 by 7, f. f., s. l.	7*	67 50	In May, 1875. Returns imperfect.	191
9436	8713	18149	12700	423	13 by 6.6, f. f., s. l.	12	67 50	Main route; branch $45, (422.)	192
.....	.....	.....	11402	380	r. a. apt., 20 by 8, f. f., s. l.	18*	67 50	Part; res. $224.50, (54.)	193
12893	9815	22708	9621	320	11.5 by 7, f. f., s. l.	14½*	67 50	13.6 m. at $45; main route; branch $45, (361.)	194
2519	1639	4158	2396	79	no r. a	12	67 50	Branch; main route $76.50, (167.) In September, 1876.	195
1196	722	1920	1507	50	no r. a	6	67 50	In September, 1876. 8 miles transferred to route 8016.	196
464	376	840	840	27	no r. a	6	67 50	Branch; main route $76.50, (167.) In September, 1876.	197
468	403	871	691	23	no r. a	18	67 50	5.55 m. decrease	198
8794	9867	18661	14370	478	10.6 by 6.9, f. f., s. l.	6	65 70	.57 m. increase	199
38638	33624	72262	57905	1930	12 by 6 11, f. f., d. l.	12	65 00	$420 m. m. .68 m. increase.	200
12313	12952	25268	16146	538	23 by 7, f. f., s. l.	6	65 00	.....	201
8969	11064	20033	10629	354	no apt.; no r. a	19½*	65 00	Main route; branch $50, (281.)	202
49189	27351	76540	38258	510	12.8 by 6.3, f. f., s. l.	7	64 80	75 days; 15 from March 15, 1876; 30 from May 15, 1876; and 30 from January 1, 1877. Main route; branches $50 $40. Branches not weighed.	203
15063	9530	24593	21551	717	8 by 6, f. f., s. l.	15*	64 00	$750 side service	204
17567	19685	37252	30861	1028	12 by 6.10, f. f., s. l.	6	63 00	.16 m. increase	205
19427	12784	32211	12945	430	in b. c.; no r. a	16½*	63 00	.3 m. increase	206
13303	11482	24785	11109	369	18 by 7, f. f., d. l.	12	63 00	.....	207
11779	7285	19064	9585	319	10.3 by 8, f. f., d. l. to Northport, 16.50 m., s. l. res.	12	63 00	20 m. at $54	208
10319	5630	15949	11326	377	in b. c.; no r. a	12	62 50	.....	209
8062	9035	17097	11115	370	17.8½ by 6.11, f. f., s. l.	12	62 50	.19 m. increase	210
10752	6525	17277	8910	297	in b. c.; no r. a	12	62 50	Branch; main route $138, (94.)	211
8324	5833	14157	9755	325	12 by 9.10, f. f., s. l.	12	62 00	Branch; main route $273, (27). In Nov., 1876. Branch to Naples not weighed.	212
7159	8684	15843	9183	306	8.1 by 6.9, f. f., s. l.	9*	62 00	.....	213
.....	.....	.....	12939	431	14.4 by 7.10, f. f., s. l.	....	61 20	Part; res. $94.50, (134.) In Nov., 1876.	214

E.—*Table showing the weight of the mails, the speed with which they*

Order.	State.	Number of route.	New number of route.	Termini.	Corporate title of company carrying the mail.	Length of route.	Miles per hour.
						Miles.	
215	N. J ..	7003	.....	Elizabethport, (n.o.,) Sea Plain	Central, of New Jersey.....	47.90	20
216	Ark ..	29006	.....	Malvern, Hot Springs.....	Hot Springs.....	25.11	17
217	Ga....	15013	.....	Macon, Brunswick.....	Macon and Brunswick.....	188	16
218	N. J ..	7026	.....	New York, Pemberton Junction.	New Jersey Southern....	84.6	35
219	Pa	8025	.....	Irvine, Corry	Pittsburgh, Titusville and Buffalo.	95	20
220	Pa ...	8083	8081	Pittsburg, Monongahela City	Pittsburgh, Virginia and Charleston.	31.04	25
221	N. Y..	1228	6040	Chenango Forks, Norwich..	Delaware, Lackawanna and Western.	30.69	24
222	Va....	11011	.....	Petersburg, Norfolk	Atlantic, Mississippi and Ohio	81.5	30
223	N. Y..	1249	6058	Buffalo, Emporium	Buffalo, New York and Philadelphia.	123.51	25
224	N. Y..	1206	6006	Avon, Dansville	Erie	30.73	20
225	R. I...	803	4004	Providence, Bristol	Providence, Warren and Bristol.	15.75	18
226	N. H..	255	1002	Concord, Portsmouth	Concord	59.16	25
227	R. I...	804	4005	Warren, Fall River.....	Fall River, Warren and Providence.	9.99	20
228	Conn .	917	5019	Litchfield, Hawleyville	Shepaug	32.78	20
228a	Del ...	9502	.....	Delmar, Cresfield.....	Eastern Shore	38	16
229	N. Y..	1283	6087	Utica, Watertown	Utica and Black River.....	92.22	23
230	Pa	8056	8055	Pittsburgh, Washington.....	Pittsburgh, Cincinnati and Saint Louis.	23.71	18
231	Pa ...	8040	8039	Blairsville, Allegheny	Pennsylvania.....	64.6	18
232	Pa	8036	8035	Tyrone, Curwinsville.....	Pennsylvania, lessees.....	47.5	16
233	N. Y..	1269	6074	Ithaca, Cortland Village	Utica, Ithaca and Elmira.....	23	24
234	Va....	11012	.....	Petersburg, Lynchburg.....	Atlantic, Mississippi and Ohio	123.25	26
235	Mass .	636	3064	Braintree Depot, Cohasset..	Old Colony, (late South Shore)	11.61	20
236	Mass .	658	3068	Springfield, Athol.....	Springfield, Athol and Northeastern.	48.27	23
237	Kan ..	33003	.....	Lawrence, Coffeyville.....	Leavenworth, Lawrence and Galveston.	142.9	20
238	Cal ...	16005	.....	Sacramento, Folsom City ...	Sacramento Valley	23.2	20
239	Pa	8044	8043	Meadville, Oil City.....	Atlantic and Great Western..	36.63	25
240	Pa	8039	8038	Tyrone, Lock Haven.....	Pennsylvania	55.1	20
241	N. Y..	1278	6086	Cooperstown, Cooperstown Junction.	Cooperstown and Susquehanna Valley.	16	20
242	N. Y..	1287	6038	Oswego, Lewiston	Rome, Watertown and Ogdensburg.	146.92	30
243	Mass .	659	3049	Framingham, Lowell	Boston, Clinton, Fitchburg and New Bedford.	29.44	28
244	Me ...	10	14	Oldtown, Blanchard.....	Bangor and Piscataquis.....	63.8	21
245	Conn .	915	5017	New Haven, Ausonia.....	New Haven and Derby	13.42	23
246	N. Y..	1231	6043	Cassville Junction, Richfield Springs.	Delaware, Lackawanna and Western.	21	24
247	N. Y..	1815	6032	Fort Edward, Glen's Falls..	Delaware and Hudson Canal..	6.92	20
248	N. Y..	1815	6032	.....do	.....do	6.92	20
249	Conn .	975	5002	East Thompson, Willimantic	New York and New England	33.68	28
250	N. Y..	1276	6034	Sayre, Fair Haven	Southern Central	121	25
251	Conn .	914	5015	Hartford, Saybrook Point...	Connecticut Valley	44.15	30
252	Mass .	656	3048	Mansfield, South Framingham.	Boston, Clinton, Fitchburg and New Bedford.	22.02	28
253	Mass .	650	3029	Pittsfield, North Adams	Boston and Albany.....	20.44	25
254	Pa	8043	8042	Branch Junction, Indiana...	Pennsylvania.....	19	17
255	Pa	8035	8034	Huntingdon, Mount Dallas Station.	Huntingdon and Broad Top...	45.14	20
256	Me ...	11	4	Belfast, Burnham Village...	Maine Central	34.79	20

are conveyed, the accommodations for mails and agents, &c.—Continued.

Whole weight carried any distance for thirty days.			Average weight carried whole distance.		Size, &c., of mail-car or apartment.	Trips per week.	Pay per mile per annum.	Remarks.	Order.
Outward.	Inward.	Total.	30 days, total.	Per day, total.					
Lbs.	*Lbs.*	*Lbs.*	*Lbs.*	*Lbs.*	*Feet and inches.*		*Dolls.*		
13437	8610	22047	12801	426	13 by 7, f. f., s. l	6	61 20		215
6640	3492	10132	10132	337	7 6 by 2.6, s. l	7	61 00	In March, 1877	216
39261	24469	63730	57973	499	14 by 7, f. f., s. l	6	69 30	Main route; branch $36. Branch not weighed. 76 days; 16 from Mar. 15; 30 from May 15, 1876, and 30 from Jan. 1, 1877. 7 trips part of the year.	217
10527	15195	25722	14756	491	8 by 6, f. f., s. l	8½*	60 30	Main route; branches $45, $45, (347, 439.)	218
20638	25184	45822	13277	442	11 by 6, f., s. l	12½*	60 30		219
8826	5180	14006	10677	355	10 by 8, f. f., s. l	12	60 30	.8 m. decrease	220
6949	11106	20055	16934	564	15.6 by 7, f. f., d. l	12	60 00		221
8627	14931	23558	19157	538	18.2 by 8.7, f. f., s. l	6	60 00	.5 m. increase	222
20521	17051	37572	16016	533	11.9 by 6, f. f., s. l	6	60 00		223
12716	8863	21579	13106	436	11.5 by 10.2, f. f., s. l	15*	60 00		224
12438	4778	17216	12971	432	in b. c.; no r. a	12	60 00	$1,050 m. m. 1.15 m. increase.	225
11953	10885	22838	11728	390	14.6 by 6.10, f. f., s. l	12	60 00	.84 m. decrease	226
5534	1857	7391	7391	246	in b. c.; no r. a	12	60 00	2.99 m. increase	227
4601	5516	10117	5765	192	11.6 by 6.6, f. f., s. l	9½*	60 00	.53 m. increase	228
14089	10868	24957	18403	613	22 by 8, f. f., s. l	6	58 50		228a
20659	21128	41787	18198	606	19 by 6.10, f. f., s. l	12	58 50		229
12982	9444	22426	17002	566	10.8 by 8.10½, f. f., s. l	12	58 50	.91 m. increase	230
12871	20255	33126	16672	555	11 by 8.6, f., s. l	6	58 50	.90 m. increase	231
11801	7851	19652	12869	428	10.8 by 8.1, f. f., s. l	12	58 50	.4 m. increase	232
8279	6967	15246	10376	345	15 by 9, f.; no r. a	6	58 50		233
11700	9612	21312	10341	344	18.2 by 8.7, f. f., s. l	6	58 50	.25 m. increase	234
9749	6387	16136	11875	395	in b. c.; no r. a	12	58 00	$704 m. m. .39 m. decrease.	235
9330	7298	16628	11552	385	12 by 7, f. f., s. l	6	57 00	$150 m. m. 1.71 m. decrease.	236
32270	18293	50563	22868	762	15 by 9, f. f., s. l	6	56 88	Main route; branch $51.30, (275.) In April, 1877.	237
8267	4896	13163	12632	421	no r. a	12	56 25	In Nov., 1876	238
10904	6634	17538	11244	374	14.4 by 7.10, f. f., s. l	12	56 25	.38 m. increase	239
10805	8588	19393	10448	348	10.8 by 8.1, f. f., s. l	12	56 25	Main route; branch $54, (260.)	240
4756	6141	10897	7667	255	in b. c	12	56 25		241
17227	18060	35287	12859	428	23 by 7, f. f., s. l	6	56 00		242
6278	17060	23338	18023	600	14 by 6.9, f. f., s. l	12	55 80	.44 m. increase	243
11151	8214	19365	12249	408	14 by 9, f. f., s. l	6	55 00		244
7074	4520	11594	10504	350	no apt.; no r. a	18	56 00	.08 m. decrease	245
8226	4561	12787	7434	247	15.6 by 7, f. f.; no r. a	12	55 00		246
7082	5826	12908	10071	335	in b. c.; no r. a	12	54 90	In Jan., 1877	247
7052	5229	12281	9941	331	in b. c.; no r. a	18	54 90		248
54750	42734	97484	87704	2923	12.6 by 6.9, f. f., d. l	21*	54 00	$96 m. m. In Feb., 1877	249
29321	37075	66396	20152	771	11 by 6.4, f. f., s. l	12½*	54 00	$1,200 side service. 1 mile decrease.	250
16689	14299	30988	15419	513	11.6 by 6.9½, 7.6 by 7, 10.6 by 6.9, (av.,) 9.10 by 6.10, f. f., s. l.	12	54 00	.99 m. increase	251
10062	10208	20270	15218	507	14 by 6.9, 12 by 6.9, f, f., d. l	13½*	54 00	.02 m. increase	252
9137	6962	16099	12224	407	in b. c.; no r. a	24	54 00	$315 m. m. .56 m. decrease.	253
12186	6813	18999	11587	386	in b. c.; no r. a	9*	54 00		254
14282	8935	23217	11286	376	8.10 by 6.9, f., s. l	12	54 00	Main route; branch $54, (265,) 1.14 m. increase.	255
6196	7376	13572	10713	357	15.11 by 7.1, f. f., d. l	12	54 00	.60 m increase	256

E.—*Table showing the weight of the mails, the speed with which they*

Order.	State.	Number of route.	New number of route.	Termini.	Corporate title of company carrying the mail.	Length of route.	Miles per hour.
						Miles.	
256a	Del...	9503	.....	Clayton, Easton	Delaware and Maryland	44	20
257	Pa....	8034	8033	Hanover, Gettysburg	Hanover Branch	16.60	20
258	N. J..	7020	.....	Millville, Cape May	West Jersey	41	25
259	Mass.	606	3033	Boston, Bellingham	New York and New England	31.77	22
260	Pa....	8039	8038	Milesburg, Belefonte	Pennsylvania	2.9	10
261	Mass.	632	3028	South Framingham, Milford	Boston and Albany	12.30	25
262	Pa....	8009	.....	Honesdale, Lackawaxen	Erie	25.04	24
263	Pa....	8052	8051	Greenville, Hilliard	Shenango and Allegheny	46.40	18
264	Pa....	8014	.....	Port Clinton, Williamsport	Philadelphia and Reading	121.53	20
265	Pa....	8035	8034	Saxton, Dudley	Huntingdon and Broad Top	6	12
266	Pa..	8020 8109	8020	Elmira, Blossburg	Tioga	45.5	20
267	Va....	11015	.....	Portsmouth, Weldon	Seaboard and Roanoke	79.31	25
268	Va....	11004	.....	Alexandria, Round Hill	Washington and Ohio	52.74	23
269	Mass.	737	3043	Cohasset Narrows, Wood's Hole.	Old Colony	17.92	25
270	Ala...	17015	.....	Chattanooga, Meridian	Alabama and Chattanooga	295	15
271	Pa....	8026	....	Strasburg, Leaman Place	F. & H. Baumgardner	4.25	20
272	R. I...	825	4305	Wickford Landing, Wickford Junction.	Newport and Wickford Railroad and Steamboat Co.	3.40	30
273	Ill....	23050	.....	Vincennes, Danville	Paris and Danville	114.19	20
274	Md...	10012	.....	Clayton, Chestertown	Kent County	30.08	16
275	Kans.	33003	.....	Cherryvale, Independence	Leavenworth, Lawrence and Galveston.	10	12
276	N. Y..	1296	6094	New York, Patchogue	Flushing, North Shore and Central.	59.21	25
277	Va....	11003	.....	Manassas, Strasburg	Washington City, Virginia Midland and Great Southern.	62.55	10
278	Conn.	916	5018	Hartford, Millerton	Connecticut Western	69.18	20
279	Mo...	28020	.....	Pierce City, Oswego	Missouri and Western	73.76	20
280	N. Y..	1299	6009	Goshen, Montgomery	Erie	10.25	27
281	N. Y..	1204	6001	Vail's Gate Junction, (n. o.,) Turner's Junction.	do	12.75	29
282	N. Y..	1264	6071	Syracuse, Earlville	Syracuse and Chenango	42.47	25
283	Ohio..	9044	21040	Marietta, Canal Dover	Marietta, Pittsburgh and Cleveland.	99.96	25
284	Cal...	46004	.....	Folsom City, Shingle Springs	Placerville and Sacramento Valley.	26.5	12
285	Va....	11007	.....	Richmond, West Point	Richmond, York River and Chesapeake.	40.50	25
286	N. Y..	1296	6075	Horseheads, Ithaca	Utica, Ithaca and Elmira	42.50	24
287	N. H..	258	1010	Contoocook Village, Hillsborough Bridge.	Concord and Claremont	15	21
288	Iowa..	.....	27033	Albia, Knoxville	Chicago, Burlington and Quincy	33.97	12
289	N. H..	262	1004	Hooksett, Pittsfield	Concord	21.35	18
290	Nebr..	34003	.....	Omaha, Tekamah	Omaha and Northwestern	47.8	18
291	N. Y..	1251	6066	Skaneateles Junction, Skaneateles.	Skaneateles	5.5	15
292	N. Y..	1314	.....	Batavia, Attica	New York Central and Hudson River.	11	25
293	N. Y..	1260	6058	Stapleton, Tottenville	Staten Island	13	25
294	Cal...	46019	.....	Visalia, Goshen	Visalia	8.37	15
295	Me...	3	2	Newport, Dexter	Maine Central	14.90	25
296	N. Y..	1262	6070	East Gainesville, Perry	Rochester and Pine Creek	6.55	12
297	N. H..	253	1008	Franklin, Bristol	Northern	13.11	.....
298	Iowa..	27032	.....	Grinnell, Montezuma	Central, of Iowa, (lessees Grinnell and Montezuma.)	14¾	18
299	Iowa..	27031	.....	Sioux City, Portlandville	Sioux City and Pembina	30.01	15
300	N. H..	256	1003	Manchester, North Weare	Concord	19.95	20

nveyed, the accommodations for mails and agents, &c.—Continued.

weight carany distance hirty days.		Average weight carried whole distance.		Size, &c., of mail-car or apartment.	Trips per week.	Pay per mile per annum.	Remarks.	Order.
Inward.	Total.	30 days, total.	Per day, total.					
Lbs.	*Lbs.*	*Lbs.*	*Lbs.*	*Feet and inches.*		*Dolls.*		
5579	14730	10417	347	10 by 6.6, f. f., s. l	6	54 00		256a
4969	11927	9963	332	11.6 by 6, f. f., d. l	12	54 00		257
580-	1347.5	972-	324	13 by 8.3, f. f., s. l	12	54 00		258
818-	20323	818-	272	in b. c.; no r. a	14½*	54 00	$260 m. m	259
316	7845	784.	261	10.8 by 8.1, f. f., d. l	18	54 00	Branch; main route $56.25, (240.) .2 m. increase.	260
4990	10287	7435	247	in b. c.; no r. a	12	54 00	$300 m. m. .30 m. increase.	261
3785	9880	727-	242	no apt.; no r. a	12	54 00	.04 m. increase	262
5354	12411	702-	234	11 by 6.10, f. f, s. l	9*	54 00	1.10 m. decrease	263
13596	25602	6854	228	9.6 by 8.8, f. f., s. l	7½*	54 00		264
621	1557	1282	42	in b. c.; no r. a	6	54 00	Branch; main route $54, (255.)	265
8699	20124	9556	318	14.3 by 7, 10.2 by 6.3, f.f., s. l	12	53 10	{ Main route; branch $45, (440, 444, 445.) }	266
112 60	18901	8156	273	21.4 by 8.6, f. f., s. l	6¼	53 10	.05 m. increase	267
710 2	18525	11069	368	12 by 6, f. f., s. l	12	53 00		268
308 9	10246	8973	299	in b. c.; no r. a	12	53 00	$375 m. m.; .25 m. increase.	269
11286	25620	4991	166	15 by 7, f. f, s. l	6	53 00	In Dec., 1876	270
816	1164	1164	38	apt.; no r. a	6	52 94		271
6161	8970	8850	295	in b. c.; no r. a	15½*	52 20		272
10790	1723 6	6991	233	10 by 6, f. f., s. l	6	52 00	In Feb., 1877	273
4886	1160 4	888-	296	10 by 6, f. f., s. l	6	51 30		274
1969	830 9	830	276	in b. c.; no r. a	6	51 30	Branch; main route $56.-8, (237.) From 2d April, 1877.	275
12467	29330	6119	203	12.3 by 6.3, f. f, s. l	11*	51 30	Main route; branches $45, (370, 401.) $3,600 for terminal and side service. Assumed by Department July 1, 1877.	276
4808	12227	5638	188	11 6 by 8.8, f. f, s. l	6	51 00		277
18671	39993	17987	599	12 by 6, f., d. l	15*	50 00		278
15445	29712	16402	546	12.6 by 6.10, f. f., s. l	6	50 00	In May, 1877	279
5535	11445	108-	362	18.7 by 7.2, f. f., s. l	9*	50 00		280
8348	14701	8224	273	no apt., no r. a	2¾*	50 00	Branch; main route $65, (202.)	281
6220	15384	7959	265	9 by 6.8, f, s. l	8¾*	50 00		282
13029	232-6	748-	249	8.9 by 8.6, f. f., s. l	6	50 00	In Nov., 1876	283
3980	10236	7290	243	no r. a	6	50 00	In Nov., 1876; ½ m. increase.	284
3514	9191	6995	233	11 by 7, f. f., s. l	12	50 00	.66 m. increase	285
4743	10900	6718	223	10.6 by 7, f., s. l	6	50 00	On 19.89 m	286
3649	742-	6691	223	10 by 4.6, f., d. l. in summer, s. l. in winter; say 6 months each.	9*	50 00		287
3912	9862	6656	222	7 by 6.6, f. f., s. l	6	50 00	In Jan., 1877	288
2933	7640	6437	214	7.3 by 4.8, f. f., s. l	6	50 00	.35 m. increase	289
3211	10471	6264	208	9.5 by 7.5, f. f., s. l	6	50 00		290
257-	6136	495-	165	7 by 3; no r. a	18	50 00	$285 m. m	291
252	4534	4534	151	in b. c.; no r. a	6	50 00	In May, 1876	292
2883	6567	4021	134	in b. c.; no r. a	12	50 00	$750 m. m; 8 m. decrease.	293
2198	3915	391-	130	caboose; no r. a	7	50 00	In Sept., 1876	294
1474	434	384	128	in b. c.; no r. a	12	50 00	$140 m. m. .90 m. increase.	295
1374	3797	3797	126	no apt.; no r. a	12	50 00		296
1697	4467	3639	121	in b. c.; no r. a	6	50 00	Branch; main route $190, (65.) .11 m. increase.	297
1864	40-6	3565	118	in b. c.; no r. a	6	50 00	Distance counted from junction; 3¼ m lap. In Oct., 1876.	298
1223	3206	3206	106	no r. a	7	50 00	In Nov., 1876	299
1753	4626	2871	95	b. c.; no r. a	12	50 00	.55 m. decrease	300

E.—*Table showing the weight of the mails, the speed with which they*

Order.	State.	Number of route.	New number of route.	Termini.	Corporate title of company carrying the mail.	Length of route.	Miles per hour.
						Miles.	
301	Mass.	633	3037	Canton Depot, Stoughton	Boston and Providence	4.15	35
302	N. Y.	1291	.....	Golden's Bridge, Lake Mahopac.	New York and Harlem	7½	20
303	Mass.	736	3060	Milford, Ashland	Providence and Worcester	12.02	28
304	Mass.	662	3059	Milford, Bellingham	do	4.10	28
305	Mass.	640	3043	Taunton, Middleborough	Old Colony	11.71	25
306	Ohio	9025	21021	Carey, Findlay	Cincinnati, Sandusky and Cleveland.	16	16
307	N. Y.	1202	6002	Sufferns, Piermont	Erie	18	25
308	Mass.	609	3038	Atlantic, West Quincy	Old Colony	3.17	25
309	Me	4	17	Calais, Princeton	Saint Croix and Penobscot	21.29	12
310	N. Y.	1267	6037	Syracuse, Lacona	Rome, Watertown and Ogdensburg.	44.92	30
311	Pa	8005	.....	Philadelphia, Norristown	Philadelphia and Reading, (lessees Philadelphia, Germantown and Norristown Railroad.)	16.24	18
312	Pa	8013	.....	Pottsville, Herndon	Philadelphia and Reading	81.10	19
313	Ohio	21053	.....	Columbus, Toledo	Columbus and Toledo	125.23	25
314	Cal	46020	.....	Colfax, Nevada City	Nevada County Narrow Gauge	22.81	12½
315	Ohio	9055	21051	Columbus, Chillicothe	Scioto Valley	51.76	20
316	Pa	8041	8040	Washington, Wheeling	Hempfield	32.4	18
317	Pa	8064	8063	Connellsville, Uniontown	Pittsburgh and Connellsville	11.7	20
318	Pa	8064	.....	Connellsville, Uniontown	Pittsburgh and Connellsville	12	20
319	N. Y.	1806	6047	Manorville, Sag Harbor	Long Island	35.25	25
320	Pa	8031	.....	Columbia, Sinking Springs	Reading and Columbia	39.7	19
321	Ohio	21040	.....	Marietta, Canal Dover	Marietta, Pittsburgh and Cleveland.	99.96	25
322	Pa	8015	.....	Sunbury, Tomhicken	Pennsylvania	44.1	19
323	N. Y.	1252	6061	Brockton, Corry	Allegheny Valley	44.68	20
324	Md	10005	.....	Weverton, Hagerstown	Baltimore and Ohio	24.53	23½
325	Conn.	903	5003	Middletown, Berlin Depot	New York, New Haven and Hartford.	11.15	30
326	N. Y.	1286	6075	Horseheads, Ithaca	Utica, Ithaca and Elmira	48.5	22
327	N. Y.	1223	6025	Schenectady, Ballston	Delaware and Hudson Canal	16	28
328	Me	231	18	West Waterville, North Anson.	Somerset	25.70	20
329	Cal	46022	.....	Watsonville, Santa Cruz	Santa Cruz	23.39	15
330	Vacant	.....	.....	.....	.....	.....	.....
331	Mass.	607	3034	East Thompson, Southbridge	New York and New England	17.75	28
332	Conn.	913	5014	New Haven, Willimantic	Boston and New York Air Line	56	27
333	Pa	8104	8102	Hanover Junction, Hanover	Hanover Branch	13.37	20
334	Ind	22022	.....	Goshen, Anderson	Cincinnati, Wabash and Michigan.	114.32	15
335	Pa	8018	8018	Scranton, Carbondale	Delaware and Hudson Canal	17.60	12
336	Pa	8074	8072	Mount Dallas Station, New Bridgeport.	Pennsylvania	31	20
337	Mass.	653	3044	South Braintree Junction, Fall River.	Old Colony	34.36	25
338	N. Y.	1277	6085	Newburg, Millerton	Dutchess and Columbia	56.50	20
339	N. Y.	1295	6093	New York, Babylon	Southern, of Long Island	36.25	25

nveyed, the accommodations for mails and agents, &c.—Continued.

e weight car- any distance thirty days.		Average weight carried whole distance.		Size, &c., of mail car or apartment.	Trips per week.	Pay per mile per annum.	Remarks	Order.
Inward.	Total.	30 days, total.	Per day, total.					
Lbs.	*Lbs.*	*Lbs.*	*Lbs.*	*Feet and inches.*		*Dolls.*		
1206	2841	2841	94	no apt.; no r. a.	18	50 00	$50 m. m. .15 m. increase.	301
1417	3532	2851	94	in b. c.; no r. a.	12	50 00	In July, 1876	302
3435	5062	2816	93	in b. c.; no r. a.	12	50 00	.34 m. increase	303
1167	2226	2226	74	in b. c.; no r. a.	12	50 00	.90 m. decrease	304
1161	2309	1806	60	in b. c.; no r. a.	24	50 00	1.17 m. increase	305
1107	2123	1763	58	in b. c.; no r. a.	6	50 00	In Sept., 1876	306
2467	4148	1698	56	6.10 by 6.6, f. f., s. l	6¼*	50 00		307
819	1883	1418	47	in b. c.; no r. a.	12	50 00	Branch; main route $150, (89.) $895 m. m. .23 m. decrease.	308
1121	2160	1347	44	7 by 9; no r. a	6	50 00	$1,050 for side service. .29 m. increase.	309
8806	20000	12458	415	7 by 8.7, f. f., s. l	6	49 50		310
6235	10754	9205	306	no apt.; no r. a.	17¼*	49 50		311
14171	26786	9049	301	8.9 by 7.7, f. f., d. l. to Shamokin, 60 m.; s. l. residue 21 m.	10½*	49 50		312
9187	19950	8093	269	15.11 by 9.3, f. f., s. l.	12	49 50	On 78.27 m. from Jan. 15, 1877. In June, 1877.	313
3337	9955	8016	267	no r. a	14	49 50	In Jan., 1877	314
4969	12735	7994	266	9.4 by 6.9, f. f., s. l	12	49 50	In Jan., 1877	315
3462	6325	2696	89	16 by 8.6, f. f., s. l	12	49 50	$377 side service. .4 m. increase.	316
4745	11621	9747	324	in b. c.; no r. a.	12	48 60	Branch; main route $98.10, (130.) .3 m. decrease.	317
4302	10818	9075	302	in b. c.; no r. a.	12	48 60	Branch; main route $76.50, (166.) In Oct., 1876.	318
5433	13745	9011	301	10.6 by 6.3, f. f., s. l.	6	48 60		319
7686	17096	8202	273	6.10 by 6.5, f. f., s. l.	14½*	48 60	Main route; branch $45, (389.)	320
13151	22894	7105	236	8.10 by 8.6, f. f., s. l	6	48 60	From 25th Apr., 1877. To be combined with Nov., 1876.	321
5507	10828	6290	209	6.6 by 8.6, f. f., s. l.	6	48 60		322
8116	18174	13718	457	11 by 6, f., s. l	6	47 70	$600 m. m. .62 m. decrease.	323
3923	7616	4565	152	16 by 8.6, f. f., d. l.	12	47 70	In Apr., 1877. .28 m. increase.	324
5205	7803	7282	242	in b. c.; no r. a.	18	46 80	$250 m. m. 1.15 m. increase.	325
5416	10050	6950	231	10.6 by 7, f. f., s. l	7½*	46 80	In Nov., 1876	326
2876	5024	4229	140	in b. c.; no r. a.	18	46 80		327
4118	10405	8346	278	12.6 by 6.6, f. f., s. l	6	45 90		328
2469	8128	6533	217	in b. c.; no r. a.	7	45 90		329
								330
		3065	102	no r. a		45 90	Part; residue $161.10. (80.)	331
54295	100117	84728	2810	9.10 by 6.8, f. f., s. l	17¾*	45 00	In Feb., 1877	332
5574	13785	11968	399	11 6 by 6, f. f., d. l.	12	45 00	.37 m. increase	333
12730	24459	11495	383	10.8 by 6.4, f., s. l	6	45 00	In Dec., 1876	334
6196	15239	11465	382	6.6 by 6, f. f., d. l.	12	45 00	$344.50 m. m. .49 m. increase.	335
6677	16511	10797	359	in b. c., f. f., s. l.	12	45 00	1 m. decrease	336
7173	16442	10109	336	in b. c.; no r. a.	18	45 00	$1,000 m. m. .36 m. increase.	337
13134	22068	9959	331	8 by 6.5, f. f., s. l	6	45 00	Main route; branch $45. (449*a.*)	338
6477	17204	9936	331	12.8 by 6.6, f. f., s. l	12	45 00	$1,950 for terminal and side service. Assumed by Department, July 1, 1877.	339

E.—*Table showing the weight of the mails, the speed with which they*

Order.	State.	Number of route.	New number of route.	Termini.	Corporate title of company carrying the mail.	Length of route.	Miles per hour.
						Miles.	
340	N. Y..	1268	6073	Rondout, Stamford	Ulster and Delaware, (late New York, Kingston and Syracuse Railroad.)	73.30	16
341	N. Y..	1235	6048	Oswego, Middletown	New York and Oswego Midland.	250.2	25
342	Ill....	23047	.....	Chester, Tamaroa	Iron Mountain, Chester and Eastern.	42	13½
343	Va....	11016	.....	Lynchburg, Danville	Washington City, Virginia Midland and Great Southern.	65.97	22
344	Va....	11002	.....	Owl Run, Warrenton	.....do	9.17	16
345	N. Y..	1265	6019	Dunkirk, Titusville	New York Central and Hudson River.	91.16	20
346	Mo ...	28013	.....	Brunswick, Pattonsburg	Hatch & Van Every, (lessees Brunswick, Chillicothe and Saint Louis.)	80.5	15
347	N. J ..	7026	.....	Manchester, Barnegat Junction.	New Jersey Southern	20.30	25
348	W. Va.	12001	.....	Harrisonburg, Staunton	Baltimore and Ohio	26.42	19
349	N. J ..	7023	.....	Jamesburg, Sea Girt	Freehold and Jamesburg Agricultural.	27.70	30
350	Pa....	8078	8076	Red Bank Furnace, Driftwood.	Allegheny Valley	109.95	20
351	Pa....	8054	8053	Freeport, Butler	Pennsylvania	22.06	20
352	N. J ..	7017	.....	Jersey City, Nyack	Northern, of New Jersey	28.71	25.5
353	Pa....	8033	8032	Columbia, Frederick	Pennsylvania	69.90	25
354	Conn .	906	5010	Plainville, New Hartford	New Haven and Northampton	14.32	30
355	Md ...	10014	.....	Bowie, Pope's Creek	Baltimore and Potomac	48.88	14
356	N. Y..	1248	6057	Utica, Smith Valley Station	Utica, Clinton and Binghamton	31.40	20
357	Pa....	8046	8045	Oil City, Ashtabula	Lake Shore and Michigan Southern.	87.49	20
358	N. J ..	7021	.....	Elmer, Salem	West Jersey	16.60	25
359	Iowa..	27008	.....	Burlington, La Clede	Burlington and Southwestern	183.52	18
360	Mass .	655	3030	Palmer, Winchendon	Boston and Albany	49.65	25
361	Pa....	8081	8065	Lawrenceville, Elkland	Fall Brook Coal Company	12.28	13
362	N. Y..	1238	6049	Norwich, Cortland	New York and Oswego Midland.	49.21	15
363	Mass .	639	3050	New Bedford, West Wareham.	Boston, Clinton, Fitchburg and New Bedford.	17.11	27
364	N. J ..	7027	.....	Newark, Montclair	Newark and Bloomfield	5.67	25
365	N. J ..	7024	.....	New York, Stony Point	New Jersey and New York	43.68	20
366	Pa....	8038	8037	Cresson, Ebensburg	Pennsylvania, (lessees)	10.9	15
367	N. Y..	1812	6097	Rhinecliff, Boston Corners	Rhinebeck and Connecticut	35.20	18
367*a*	Del ..	9504	.....	Harrington, Lewes	Junction and Breakwater	40	20
367*b*	Del ...	9506	.....	Georgetown, Selbyville	Breakwater and Frankford	19.30	14
368	Conn .	912	5008	Vernon Depot, Rockville	Hartford, Providence and Fishkill.	4.54	22
369	Md ...	10008	.....	Cambridge, Seaford	Dorchester and Delaware	33.63	16
370	N. Y..	1296	6094	Flushing, Whitestone	Flushing, North Shore and Central.	3.12	25
371	N. Y..	1253	6062	Chesterville, Warwick	Warwick Valley	11	25
372	S. C...	14007	.....	Chester, Dallas	Chester and Lenoir Narrow Gauge.	49.93	12
373	Pa....	2411	8011	Penn Haven Junction, Mount Carmel.	Lehigh Valley	52.84	25
374	N. Y..	1240	6050	Walton, Delhi	New York and Oswego Midland.	16	20
375	Md ...	10010	.....	Townsend, Centerville	Queen Anne and Kent	36.34	18
376	Md ...	10009	.....	Salisbury, Ocean City	Wicomico and Pocomoke	31.02	20
377	N. Y..	1272	6080	Canastota, Cazenovia	Cazenovia, De Ruyter and Canasota.	15	20
378	Md ...	10016	.....	Selbyville, Franklin City	Worcester	35.96	14
379	N. Y..	1239	6051	Clinton, Rome	Rome and Clinton	13.75	20
380	Pa....	8094	8092	York, Delta	Peach Bottom	36.25	15
381	R. I...	823	4006	Providence, Pascoag	Providence and Springfield	23.43	30
382	Pa....	8057	8056	Perkiomen Junction, Emaus.	Philadelphia and Reading	37.72	25.32

re conveyed, the accommodations for fast mails and agents, &c.—Continued.

Whole weight carried any distance for thirty days.			Average weight carried whole distance.		Size, &c., of mail-car or apartment.	Trips per week.	Pay per mile per annum.	Remarks.	Order.
Outward.	Inward.	Total.	30 days, total.	Per day, total.					
Lbs.	*Lbs.*	*Lbs.*	*Lbs.*	*Lbs.*	*Feet and inches.*		*Dolls.*		
11712	7938	19650	9919	330	12 by 7.5, f. f., s. l	6	45 00		340
25182	28159	53341	9671	322	14.8 by 7, f. f., s. l	6	45 00	Main route; branch $45 (429.)	341
5484	7612	13096	9339	311	9 by 6, f. f., s. l	6	45 00	In March, 1877	342
8300	6691	14991	9276	311	in b. c., s. l	6	45 00	.37 m. decrease	343
5961	4054	10015	9180	306	in b. c	12	45 00	Branch; main route $227.50, (49.)	344
11526	8814	20340	8731	291	12 by 7, f. f., s. l	6	45 00		345
13946	6893	20839	8669	289	8 by 8, fixtures, s. l	8¾*	45 00	In Jan., 1877	346
5497	3170	8867	8667	288	8 by 6, f. f., s. l	12	45 00	Branch; main route $60.30, (218.)	347
6354	4965	11319	8615	287	16 by 8.6, f. f., s. l	7½*	45 00	.36 m. increase. Part; residue $74.70, (172.)	348
8596	4828	13424	8565	285	6.6 by 8.7, s. l	12	45 00	$542.14 side service	349
12549	10490	24039	8555	285	14.6 by 8.9, f. f., s. l	9*	45 00		350
6963	5156	12119	8452	281	6 by 8.5, f., d. l	12	45 00	.76 m. increase	351
7817	5764	13581	8272	275	6.10 by 6.6, f. f., s. l	6	45 00	$658 side service. 1.29 m. decrease.	352
12747	12506	25253	8007	266	7.8 by 6.3, f. f., s. l	8⅝*	45 00	.40 m. increase	353
6720	5444	12164	7740	258	15.5 by 6.5, f. f., d. l	18	45 00	Branch; main route $144, (91.) 2.24 m. decrease.	354
8513	5805	14318	7563	251	14.8 by 8.7., f. f, s. l	6	45 00	.2 m. increase	355
11259	6284	17543	7526	250	15.6 by 7, f. f., d. l	12	45 00		356
9169	11952	21121	7305	243	18 by 8.6, 13 by 8.6, f. f., s l	6	45 00	.40 m. increase	357
6211	3754	9965	7307	243	10.8 by 6.5, f. f.; no r. a	6	45 00		358
14554	11213	25767	6899	229	11 10 by 9.4, 13.6 by 8.6., f. f., s. l.	6	45 00	In June, 1877	359
8538	6280	14818	6821	227	10.3 by 6.3., f. f., s. l	10¼*	45 00	.40 m. increase	360
4490	2880	7370	6776	224	11 by 7.4, f. f., s. l	12	45 00	Branch; main route $67.50, (194.) Route 8081 discontinued from July 1, 1877.	361
5854	6328	12182	6690	223	9 by 7.6, f. f., s. l	6	45 00		362
4041	3410	7451	6244	208	no r. a	13½*	45 00	$281.25 m. m. .86 m. increase.	363
5066	2903	7969	6176	205	in b. c.; no r. a	12	45 00		364
5973	5027	11000	5925	197	in b. c.; no r. a	12	45 00	27.18 m. at $36	365
3282	2625	5907	5907	196	in b. c.; no r. a	12	45 00	.1 m. decrease	366
6018	4237	10255	5806	193	10.6 by 7, f. f., s. l	6	45 00		367
6883	3071	9954	5477	182	33.7 by 8.10, f. f., s. l	12	45 00		367a
4087	2745	6832	5434	181	6 by 7, f. f., s. l	6	45 00		367b
3603	1988	5591	5412	180	in b. c.; no r. a	18	45 00	$268.75 m. m. .085 m. decrease.	368
3504	5650	9154	5366	178	12 by 9, f. f., s. l	6	45 00	.13 m. increase	369
4372	3852	8224	5243	174	in b. c.; no r. a	12	45 00	Branch; main route $51.30, (276.)	370
3412	2548	5960	5032	167	in b. c; no r. a	12	45 00		371
4017	4941	8958	4982	166	6.6 by 5.6, f. f., s. l	6	45 00	In Feb., 1877	372
6415	4134	10549	4942	164	10 by 6.6, f. f., s. l	12	45 00	2.84 m. increase. In Sept., 1876.	373
4081	2978	7059	4891	163	in b. c.; no r. a	6	45 00		374
4366	3058	7424	4914	163	8 by 7.6, f. f., s. l	6	45 00	.34 m. increase	375
2741	3574	6315	4908	162	9.6 by 8, f. f., s. l	6	45 00	.52 m. increase	376
3654	2042	5696	4791	159	2.8 by 2.8	12	45 00		377
4433	2946	7379	4776	159	6 by 7, f. f., s. l	6	45 00	.72 m. increase	378
3318	2906	6224	4652	155	15.6 by 7, f. f.; no r. a	12	45 00		379
5309	3417	8726	4621	154	13.9 by 7.4, f. f., s. l	6	45 00	.69 m. increase	380
5114	3210	8324	4513	150	no apt.; no r. a	12	45 00	.31 m. increase	381
7536	6985	14521	4450	148	6.6 by 5.6, f. f., s. l	6¾*	45 00	In October, 1876	382

E.—*Table showing the weight of the mails, the speed with which they*

Order.	State.	Number of route.	New number of route.	Termini.	Corporate title of company carrying the mail.	Length of route.	Miles per hour.
						Miles.	
383	Pa....	8065	8064	Carbondale, Susquehanna Depot.	Erie	38.25	12
384	Pa....	8057	8056	Perkiomen Junction, Emaus.	Philadelphia and Reading	37.72	21
385	N. Y..	1289	6076	Freeville, Scipio	Utica, Ithaca and Elmira	28.82	21
386	Conn .	908	5011	Waterbury, Watertown	Naugatuck	6.15	23
387	Pa....	8048	8047	Downingtown, New Holland.	Pennsylvania, (lessees)	28	14
388	N. Y..	1246	6055	Schoharie, Middleburgh	Middleburgh and Schoharie	5½	20
389	Pa....	8031	.....	Junction, Quarryville	Reading and Columbia	23.2	14
390	N. Y..	1271	6079	Poughkeepsie, Millerton	Poughkeepsie, Hartford and Boston.	43.15	25
391	N. Y..	1280	6029	Plattsburgh, Ausable Forks.	Delaware and Hudson Canal	23	20
392	Conn .	909	5012	Van Deusenville, State Line.	Housatonic	11.05	25
393	Pa....	8106	8106	Millersburgh, Williamstown.	Summit Branch	21.09	20
394	Md ...	10011	.....	Cumberland, Piedmont	Cumberland and Pennsylvania	33.76	15
395	Pa....	8050	8049	Junction Pennsylvania Railroad, Milroy.	Pennsylvania	12.5	10
396	Mass .	755	3031	North Brookfield, East Brookfield.	Boston and Albany, (lessees North Brookfield.)	4.22	25
397	Va....	11019	.....	Harrisonburgh, Staunton	Shenandoah Valley	26.78	20
398	Pa....	8098	8096	New Castle, Stoneborough	New Castle and Franklin	36.49	15
399	Pa....	8028	.....	Harrisburgh, Auburn	Philadelphia and Reading	58.3	25
400	N. J ..	7030	.....	Newark, Paterson	Erie	13.12	29
401	N. Y..	1296	6094	Bay Side, Manhasset	Flushing, North Shore and Central.	3.03	25
402	Pa....	8047	8046	Bethlehem, Chapman Quarries	Lehigh and Lackawanna	17.18	20
403	Pa....	8064	8063	Broadtop, Mount Pleasant	Pittsburgh and Connellsville	9.39	20
404	N. J ..	7009	.....	Lambertville, Flemington	Pennsylvania	12.13	20
405	Mo ...	28033	.....	Kansas City, Lexington	Wyandotte, Kansas City and Northwestern.	43.35	16
406	Md ...	10019	.....	Emmittsburgh, Rocky Ridge.	Emmittsburgh	7	14
407	N. Y..	1810	6096	Hammondsport, Bath	Bath and Hammondsport	9.4	14
408	N. Y..	1261	6069	Hudson, Chatham Village	Boston and Albany	17.25	25
409	Pa....	8072	8070	Shaff's Bridge, Somerset	Somerset and Mineral Point	9.1	18
410	Y. Y..	1233	6044	Mineola, Locust Valley	Long Island	12.25	25
410a	Pa....	8064	8063	Broad Ford, Mount Pleasant.	Pittsburgh and Connellsville	9	25
411	Ind...	22035	.....	Muncie, La Fayette	La Fayette, Muncie and Bloomington.	85.43	25
412	Pa....	8055	8054	Wilmington, Reading	Wilmington and Northern	73	20
413	Pa....	8023	.....	Sunbury, Mount Carmel	Northern Central	26.36	17½
414	Ohio..	21054	.....	Xenia, Washington Court-House.	Dayton and Southeastern	31.15	18
415	Wis ..	25029	.....	Lone Rock, Richland Center.	Pine River Valley and Stevens Point.	16.5	12
416	Pa....	8063	8062	Topton, Kutztown	Philadelphia and Reading	4.36	17
417	Mass .	661	3069	Holyoke, Westfield	New Haven and Northampton	10.53	30
418	Ind...	22016	.....	Fairland, Martinsville	Fairland, Franklin and Martinsville.	38.50	20
419	Mass .	747	3065	Cohasset, South Duxbury	Old Colony, late Duxbury and Cohasset.	17.63	21
420	N. J ..	7029	.....	Whiting, Atco	New Jersey Southern	33.30	35
421	Pa....	8051	8050	Pottsville, Frackville	Philadelphia and Reading	8.51	11
422	N. Y..	1288	6088	Theresa Junction, Clayton	Utica and Black River	16.25	16
423	N. J ..	7022	.....	Woodbury, Swedesborough	West Jersey	11	22
424	N. Y..	1294	6039	Watertown, Sacket's Harbor.	Utica and Black River	12.51	16
425	Pa....	8102	8100	Tamaqua, Mauch Chunk	Central of New Jersey	13.7	20
426	Pa....	8067	8066	Phœnixville, Eagle	Philadelphia and Reading	11.12	13
427	Ohio..	21009	.....	Minerva, Leavitt	Ohio and Toledo	22.22	12
428	N. J ..	7036	.....	Summit, Bernardsville	New Jersey West Line	14.60	30
429	N. Y.	1235	6048	Summitville Junction, (n. o.,) Ellenville.	New York and Oswego Midland.	8	17

nveyed, the accommodations for mails and agents, &c.—Continued.

weight carany distance thirty days.		Average weight carried whole distance.		Size, &c., of mail-car or apartment.	Trips per week.	Pay per mile per annum.	Remarks.	Order.
Inward.	Total.	30 days, total.	Per day, total.					
Lbs.	*Lbs.*	*Lbs.*	*Lbs.*	*Feet and inches.*		*Dolls.*		
4060	7800	4466	148	12.4 by 7, f. f., s. l	6	45 00		383
7004	14251	4422	147	7 by 3.9, f. f., s. l	6¾*	45 00		384
2362	5838	4401	146	15 by 9, fixtures; no r. a	6	45 00		385
1919	5019	4291	143	in b. c.; no r. a	12	45 00	Branch: main route $106.20, (120.) .40 m. increase.	386
3648	8537	4319	143	in b. c.; no r. a	12	45 00		387
1404	4322	4322	143	no apt.; no r. a	18	45 00	$120 m. m	388
4600	11227	4261	142	no apt.; no r. a	13¾*	45 00	Branch; main route $48.60, (320.)	389
4112	10578	4283	142	7 by 6 4, f. f., s. l	6	45 00		390
1722	5679	4205	139	in b. c.; no r. a	6	45 00		391
2213	5485	4130	137	in b. c.; no r. a	6	45 00	Branch; main route $86.40, (151.) .01 m. decrease.	392
2865	6874	4074	135	in b. c.; no r. a	12	45 00		393
5047	8787	4146	135	10.9 by 6.6, f. f., s. l	6	45 00	.24 m. decrease	394
2245	5732	4047	134	in b. c.; no r. a	5*	45 00		395
2540	4039	4039	134	in b. c.; no r. a	12	45 00	.13 m. decrease	396
2700	6323	4002	133	8 by 8, f. f., s. l	6	45 00	In December, 1876; discontinued.	397
2673	7965	3966	132	11 by 4, f. f., s. l	6	45 00	.01 m. decrease	398
5352	9196	3941	131	6.10 by 3.7, f. f., s. l	7¾*	45 00		399
1774	6203	3943	131	no apt.; no r. a	12	45 00		400
1730	4615	3841	128	in b. c.; no r. a	12	45 00	Branch; main route $51.30, (276.)	401
1800	4610	3834	127	in b. c.; no r. a	12	45 00	2.18 m. increase	402
1994	5362	3726	124	in b. c.; no r. a	6	45 00	Branch; main route $98.10, (130.) .39 m. increase.	403
2576	4948	3708	123	in b. c.; no r. a	2	45 00		404
4448	9453	3697	123	8.1 by 5.2, f. f., s. l	6	45 00	In May, 1876	405
2265	3847	3705	123	in b. c.; no r. a	12	45 00		406
2207	3725	3725	124	no apt.; no r. a	18	45 00		407
2122	5420	3711	123	in b. c.; no r. a	12	45 00		408
1855	3855	3672	122	in charge of conductor	12	45 00	$200 m. m	409
2300	6147	3668	122	in b. c.; no r. a	12	45 00		410
1962	5210	3594	120	in b. c.; no r. a	12	45 00	Branch; main route $76.50; (166.) in October, 1876.	410*a*
4525	9681	3506	117	14.2 by 7.9, f. f., s. l	6	45 00	In February, 1877	411
5620	12698	3462	115	7.6 by 6.10, f. f., s. l	6	45 00	.4 m. increase	412
3158	6626	3442	114	4.10 by 5 9, f. f., s. l	12	45 00	1.64 m. decrease	413
2626	5963	3387	112	8.2 by 7.6, f. f., s. l	6	45 00	In July, 1877	414
1309	3929	3335	111	b. c.; no r. a	6	45 00	In November, 1876	415
1559	3265	3265	107	no apt.; no r. a	21*	45 00		416
1935	3199	3199	106	15.5 by 6 5, f. f., d. l	12	45 00		417
2599	6328	3063	102	11 by 7, fixtures, s. l	6	45 00	In April, 1877	418
2738	6941	3055	101	in b. c.; no r. a	12	45 00	.06 m. increase	419
2689	4961	2863	95	8 by 6, f. f., s. l	7¾*	45 00		420
2308	5321	2834	94	no r. a.; no apt	9¾*	45 00		421
1411	3682	2758	91	no r. a.; no apt	6	45 00	Branch; main route $67.50, (192.)	422
1427	3260	2563	85	10.6 by 8.6; no r. a	6	45 00		423
905	2810	2548	84	no apt.; no r. a	12	45 00		424
2313	4347	2349	78	b. c.; no r. a	6	45 00	.3 m. decrease	425
1184	3166	2163	72	no apt.; no r. a	6	45 00		426
1634	3826	2173	72	no apt.; no r. a	6	45 00		427
1601	3777	2101	70	in b. c.; no r. a	6	45 00		428
1121	2174	2093	70	in b. c.; no r. a	6	45 00	Branch; main route $45, (341.)	429

E.—*Table showing the weight of the mails, the speed with which they*

Order.	State.	Number of route.	New number of route.	Terminal.	Corporate title of company carrying the mail.	Length of route.	Miles per hour.
						Miles.	
430	Conn	905	5005	Windsor Locks, Suffield	New York, New Haven and Hartford.	4.79	15
431	N. J	7038	7038	Rahway, Perth Amboy	Pennsylvania	7.45	30
432	N. Y.	1292	6092	Crawford Junction, (n. o.,) Pine Bush.	Middletown and Crawford	10.18	16
433	N. J	7014	.....	Dover, Chester	Morris and Essex	10	25
434	Ky	20019	.....	Louisville, Cecilian	Louisville and Nashville	48.28	15
435	W. Va	12005	.....	Pennsborough, Ritchie Court-House.	Pennsborough and Harrisville.	9	12
436	Tenn	19017	.....	Knoxville, Maryville	Knoxville and Maryville	16.27	12
437	Pa	8070	8068	Union City, Titusville	Pittsburgh, Titusville and Buffalo.	14.1	12
438	Mass	630	3032	Natick, Saxonville	Boston and Albany	3.94	25
439	N. J	7026	.....	Eatontown, Port Monmouth	New Jersey Southern	9.8	25
440	Pa	8020	.....	Tioga Junction, Lawrenceville.	Tioga	3.93	20
441	Mass	629	3027	Auburndale Station, Newton Lower Falls.	Boston and Albany	2.20	25
442	N. J	7005	.....	Jamesburgh, South Amboy	Pennsylvania	14.95	30
443	Md	10015	.....	Newtown Junction, Newtown.	Worcester and Somerset	9.7	13½
444	Pa	8020	.....	Blossburgh, Arnot	Tioga	4.09	20
445	Pa	8020	.....	Blossburgh, Morris Run	Tioga	4.09	20
446	Va	11010	.....	Petersburgh, City Point	Atlantic, Mississippi and Ohio.	10	12
447	Mass	617	3026	Grafton Depot, Millbury	Boston and Albany	4.46	10
448	Pa	8099	8097	White Haven, Upper Lehigh	Central, of New Jersey	9.85	20
449	Pa	8090	8088	Phillipsburgh, Morrisdale Mines.	Pennsylvania	3.59	14
449*a*	N. Y.	1277	6085	Clove Branch Junction, Sylvan Lake.	Dutchess and Columbia	4.5	20
450	N. Y.	1803	6031	Nineveh Junction, Jefferson Junction.	Delaware and Hudson Canal	21	25
451	Pa	8093	8091	Larrabee, Clermont	McKean and Buffalo	22.15	15
452	Pa	8086	8084	Hollidaysburgh, Royer	Pennsylvania	20.43	14
453	Pa	8091	8089	Reading, Slatington	Philadelphia and Reading, (lessees Berks County Railroad.)	43.32	21
454	Pa	8107	8104	South West Junction, (n. o.,) Uniontown.	Pennsylvania, (operating Southwestern.)	37.38	20
455	Pa	8061	8060	Towanda, Bernice	State Line and Sullivan, (late Sullivan and Erie.)	29.32	15
456	N. J	7039	.....	Woodbury, Penn's Grove	Delaware Shore	20.47	20
457	Pa	8101	8099	Osceola Mills, Ramey	Pennsylvania	9.20	12
458	Utah	41004	.....	Sandy Station, Bingham Cañon.	Bingham Cañon and Camp Floyd.	22.5	15
459	N. Y.	1802	6030	Quaker Street, Schenectady	Delaware and Hudson Canal	15	20
460	Pa	8059	8058	Barnitz, Williams' Mills Junction.	Harrisburgh and Potomac	13.9	10
461	N. Y.	1825	6100	Valley Stream, Oceanus	Long Island	8.50	20
462	Minn	26019	.....	Worthington, Luverne	Worthington and Sioux Falls	34.61	15
463	N. Y.	1810	6010	Goshen, Pine Island	Erie	11	18
464	Ill	23058	.....	Alvin, Fisher	Havana, Rantoul and Eastern	40.5	9½
465	Tenn	19013	.....	Tracy City, Cowan	Tennessee Coal and Railroad Company.	23	12
466	Cal	46021	.....	Los Angeles, Santa Monica	Los Angeles and Independence	16.80	20
467	Mass	635	3040	South Abington, Bridgewater	Old Colony	7.07	20
468	N. H.	360	1016	Portsmouth, Dover	Eastern	11.64	25
469	Pa	8103	.....	Wilkesbarre, Wanamie	Central, of New Jersey	11.55	15
470	N. J	7002	.....	Somerville, Flemington	Central, of New Jersey	16.06	20
471	N. Y.	1274	6082	Johnsonville, Greenwich	Greenwich and Johnsonville	14	25
472	Pa	8060	8059	Lebanon, Tower City	Philadelphia and Reading	43.1	20
473	Pa	8024	.....	Alton, Carrolton	Erie, (lessees)	24.79	24
474	Pa	8080	8078	Tunkhannock, Montrose	Montrose	28.05	15
475	Pa	8062	8061	Schuylkill Haven, Glen Carbon.	Philadelphia and Reading	13.2	15
476	N. J	7031	.....	Atsion, Bridgeton	Vineland	37.75	35

are conveyed, the accommodations for mails and agents, &c.—Continued.

Whole weight carried any distance for thirty days.			Average weight carried whole distance.		Size, &c., of mail-car or apartment.	Trips per week.	Pay per mile per annum.	Remarks.	Order.
Outward.	Inward.	Total.	30 days, total.	Per day, total.					
Lbs.	*Lbs.*	*Lbs.*	*Lbs.*	*Lbs.*	*Feet and inches.*		*Dolls.*		
1406	683	2089	2089	69	in b. c.; no r. a	12	45 00	Branch; main route $447.30, (18.) .03 m. increase.	430
1475	1603	3078	2100	69	no apt.; no r. a	6	45 00		431
1704	910	2614	2066	68	in b. c.; no r. a	6	45 00	$96 m. m	432
1672	1053	2725	1863	62	in b. c.; no r. a	9*	45 00		433
4106	2457	6563	1864	62	12 by 7, f. f., s. l	6	45 00	In March, 1877	434
1116	691	1807	1728	57	in locked apt	12	45 00		435
1524	676	2200	1689	56	no r. a	6	45 00	In August, 1876	436
1265	1378	2643	1676	55	6 by 6, fixtures, s. l	6	45 00		437
992	620	1612	1612	53	in b. c.; no r. a	12	45 00	.06 m. decrease	438
1931	1689	3620	1565	52	in b. c.; no r. a	6	45 00	Branch; main route $60.30, (218.)	439
1271	1126	2397	1553	51	14.3 by 7, 10.2 by 6.3, f. f., s. l	12	45 00	Branch; main route $53.10, (266.)	440
898	633	1531	1531	51	in b. c.; no r. a	12	45 00	.20 m. increase	441
625	2069	2694	1513	50	in b. c.; no r. a	9*	45 00	Branch; main route $81, (160.)	442
938	435	1373	1373	45	in b. c.; no r. a	6	45 00	.7 m. increase	443
604	331	935	935	31	no apt.; no r. a	6	45 00	Branch; main route $53.10, (266.)	444
542	325	867	867	28	no apt.; no r. a	6	45 00	Branch; main route $53.10, (266.)	445
498	345	843	843	27	in b. c.; no r. a	6	45 00	.75 m. decrease	446
313	492	805	805	26	in b. c.; no r. a	9*	45 00	.46 m. increase	447
448	260	708	708	23	in b. c.; no r. a	6	45 00	.03 m. increase	448
473	237	710	710	23	in b. c.; no r. a	6	45 00	.1 m. decrease	449
438	250	688	688	22	no r. a	6	45 00	Branch; main route $45, (338.)	449*a*
2843	3414	6257	4437	147	6.6 by 6, f. f., s. l	6	40 50		450
3285	2369	5654	3821	127	8 6½ by 6.9, f. f., s. l	8½*	40 50	1.15 m. decrease	451
2889	2153	5042	3367	112	in b. c.; no r. a	9*	40 50	.82 m. decrease	452
4881	3819	8700	3127	106	6.3 by 5.2, f. f., s. l	6	40 50		453
3622	2243	5865	2804	93	in b. c.; no r. a	6	40 50		454
3725	1885	5610	2340	78	8 by 7, f. f., s. l	6	40 50		455
2193	1518	3711	2276	75	11.2 by 8.10, fixtures; no r. a	42	40 50		456
1712	1106	2818	1935	64	in b. c.; no r. a	6	40 50	.14 m. increase	457
1830	617	2447	1864	62	in b. c.; no r. a	7	40 50	In Mar., 1877	458
829	1144	1973	1555	51	in b. c.; no r. a	12	40 50		459
696	746	1442	1442	48	in b. c.; no r. a	6	40 50	Service discontinued July 13, 1877.	460
723	517	1240	843	28	in b. c.; no r. a	9*	40 50	12 in summer; 6 in winter.	461
1901	1189	3090	2715	90	in b. c.; no r. a	6	40 00	In Jan., 1877	462
1871	1283	3154	2454	81	no apt.; no r. a	12	40 00		463
3005	2840	5845	2106	70	8 by 7; no r. a	6	40 00	In Oct. and Nov., 1876.	464
1012	1875	2888	1831	61	in passenger-car; no r. a	6	40 00	In Sept., 1876	465
1058	680	1738	1738	57	18 by 9; no r. a	6	40 00	In Mar. and April, 1877	466
414	1317	1731	1072	35	in b. c.; no r. a	12	40 00	$80 m. m. .68 m. decrease.	467
426	293	719	658	21	in b. c.; no r. a	6	40 00	In Mar., 1876	468
518	329	847	632	21	in b. c.; no r. a	6	40 00	In Oct., 1876	469
1901	1750	3651	2195	73	no apt.; no r. a	6	38 70		470
3916	1930	5846	5178	172	in b. c.; no r. a	12	38 57½	Corrected returns	471
6421	4266	10687	4057	135	6.7 by 4.11, f. f., s. l	8½*	36 00		472
5780	4436	10216	3863	128	no apt.; no r. a	8¾*	36 00	.71 m. decrease	473
2989	2523	5512	3694	123	6.8 by 4.8, f. f., s. l	6	36 00		474
3146	2549	5695	3219	107	no apt.; no r. a	9¼*	36 00		475
2562	2910	5472	3201	106	8 by 6, f. f., s. l	6	36 00		476

E.—*Table showing the weight of the mails, the speed with which they*

Order.	State.	Number of route.	New number of route.	Termini.	Corporate title of company carrying the mail.	Length of route.	Miles per hour.
						Miles.	
477	N. J ..	7010	.....	Greensburgh Station, New Brunswick.	Pennsylvania	29.13	20
478	N. J ..	7034	.....	Jersey City, Greenwood Lake.	Montclair and Greenwood Lake.	46.90	20
479	Pa	8096	8094	Oxford, Peter's Creek	Peach Bottom	21.93	20
480	Pa	8053	8057	Pottstown, Colebrookdale ...	Philadelphia and Reading	13.05	13
481	Kans	33015	.....	Ottawa, Williamsburgh	Kansas City, Burlington and Santa Fé.	17.38	18
481a	Del ...	9505	.....	Wilmington, Landenburgh ..	Wilmington and Western	19.53	12
482	Pa	8079	8077	Chambersburgh, Mont Alto.	Mont Alto	14.75	18
483	W.Va	12004	.....	Laurel Junction, Volcano ...	Laurel Fork and Sand Hill	10.009	15
484	Pa	8071	8069	Towanda, Barclay	Towanda Coal Company, (lessees Barclay Railroad.)	12	15
485	Pa	8085	8083	Pomeroy, Delaware City	Pennsylvania	38.97	14
486	Pa	8095	8093	Lawsonham, Sligo	Allegheny Valley, (Sligo Branch.)	10.41	12
487	Md ...	10018	.....	Lake Roland, (n. o.,) Western Maryland Railroad Junction.	Northern Central	8.5	13
488	Miss ..	18004	.....	Artesia, Starkville	Mobile and Ohio	11.5	8
489	N. Y ..	1816	.....	Crown Point, Hammondville	Crown Point Iron Company ...	11.82	10
490	N. Y ..	1816	6099	Crown Point, Hammondville	Crown Point Iron Company ...	11.82	10
491	Ala ...	17022	.....	Selma, Martin's Station	New Orleans and Selma	20.5	15
492	N. Y ..	1275	6083	Montgomery, Kingston	Wallkill Valley	33.46	25
493	Conn	909	5012	Brookfield Junction, Danbury.	Housatonic	6.30	25
494	N. J ..	7033	.....	Bridgeton, Port Norris	Bridgeton and Port Norris	20.24	20
495	Tex ...	31013	.....	Houston, Orange	Texas and New Orleans	106.84	16
496	Va	11014	.....	Glade Springs, Saltville	Atlantic, Mississippi and Ohio	9.5	12
497	Pa	8007	.....	Bridgeport, Downingtown ...	Philadelphia and Reading	21.48	12
498	Pa	8076	8074	Conshohocken, Flourtown ...	Philadelphia and Reading	7.25	7
499	Pa	8097	8095	Pittsburgh, Castle Shannon	Pittsburgh and Castle Shannon	7	12
500	Pa	8053	8052	Carlisle, Mountain Creek	South Mountain Iron Company	18	12
501	Va ...	11017	.....	Chester, Winterpock	Clover Hill, (late Richmond and Petersburgh.)	18.75	18

are conveyed, the accommodations for mails and agents, &c.—Continued.

Whole weight carried any distance for thirty days.			Average weight carried whole distance.		Size, &c., of mail-car or apartment.	Trips per week.	Pay per mile per annum.	Remarks.	Order.
Outward.	Inward.	Total.	30 days, total.	Per day, total.					
Lbs.	*Lbs.*	*Lbs.*	*Lbs.*	*Lbs.*	*Feet and inches.*		*Dolls.*		
4124	3014	7138	2952	98	in b. c.; no r. a	13*	36 00		477
3204	2727	5931	2906	96	in b. c	6	36 00		478
2227	2027	4254	2794	93	in b. c.; no r. a	8*	36 00		479
2729	1921	4650	2597	86	no apt.; no r. a	6	36 00		480
1099	576	1675	1675	55	in b. c.; no r. a	6	36 00	In May, 1877	481
2021	1479	3500	1611	53	7.5 by 6.10, f. f., s. l	6	36 00		481*a*
888	481	1369	1369	45	in locked box	6	36 00		482
465	776	1241	1241	40	in b. c	12	36 00		483
1801	934	2735	1165	38	in charge of conductor	6	36 00		484
1707	1371	3076	1035	34	in b. c, s. l	9*	36 00	.39 m. increase	485
781	267	1048	1048	34	in b. c.; no r. a	6	36 00	.06 m. decrease	486
534	409	943	620	20	in b. c.; no r. a	6	36 00		487
1624	850	2474	2474	82	in charge of conductor	3½*	31 50	Branch; main route $57.60. Main route not weighed. In Mar., 1877.	488
639	501	1140	773	25	locked box in passenger-car	6	31 50	In Jan., 1877	489
660	510	1170	778	25	locked box in passenger-car.; no r. a.	6	31 50		490
858	353	1211	998	33	b. c.; no r. a	3	30 00	6 trips a portion of the year. In Oct., 1876.	491
7469	7594	15054	9301	311	18 by 8.8, f. f, s. l	6	27 00		492
1229	953	2182	2182	72	in b. c.; no r. a	18	27 00	Branch; main route $86.40, (151.) .55 m. increase.	493
2314	1431	3745	2062	68	7.5 by 7, f. f.; no r. a	9⅔*	27 00	$650 side service. Corrected returns.	494
2473	846	3319	1723	57	7.2 by 6.8, f. f., ½ line	3	27 00	In May and June, 1877	495
719	614	1333	1333	43	in locked apt	6	27 00	.5 m. decrease	496
1312	744	2056	1191	39	no apt.; no r. a	6	27 00		497
904	504	1408	929	30	no apt.; no r. a	6	27 00	$145 m. m	498
378	308	686	449	14	no apt	6	27 00		499
1834	1418	3252	1469	48	no r. a	6	25 00		500
277	96	373	373	12	in charge of conductor	6	20 00	.25 m. increase	501

THOMAS J. BRADY,
Second Assistant Postmaster-General.

Index to Table E.

Title.	Order.	Number of route.	New number of route.
Alabama and Chattanooga	270	17015	.....
Alexandria and Washington	50	11018	.....
Allegheny Valley	139	8042	8041
Do	323	1252	6061
Do	350	8078	8076
Allegheny Valley (Sligo Branch)	486	8095	8093
Annapolis and Elk Ridge	190	10007	.....
Atlanta and Richmond Air Line	155	15001	.....
Atlantic and Great Western	71	21005	.....
Do	92	21034	.....
Do	134	21005	.....
Do	135	21005	.....
Do	148	21034	.....
Do	214	21005	.....
Do	539	8044	8043
Atlantic, Mississippi and Ohio	57	11013	.....
Do	222	11011	.....
Do	234	11012	.....
Do	446	11010	.....
Do	496	11014	.....
Baltimore and Ohio	21	10003	.....
Do	25	10003	.....
Do	40	12002	.....
Do	44	12002	.....
Do, (lessees Sandusky, Mansfield and Newark)	54	21010	.....
Do do	55	21010	.....
Do, (operating Baltimore, Pittsburgh and Chicago)	58	21047	.....
Do	145	10017	.....
Do	147	10004	.....
Do	153	12001	.....
Do	172	12001	.....
Do., (lessees Sandusky, Mansfield and Newark)	193	21010	.....
Do	324	10005	.....
Do	348	12001	.....
Baltimore and Potomac	355	10014	.....
Baltimore, Pittsburgh and Chicago. (See Baltimore and Ohio.)			
Bangor and Piscataquis	244	10	14
Barclay. (See Towanda Coal Company.)			
Bath and Hammondsport	407	1810	6096
Baumgardner, F. and H	271	8026	.....
Berks County. (See Philadelphia and Reading.)			
Bingham Cañon and Camp Floyd	458	41004	.....
Boston and Albany	10	605	3025
Do	11	605	3025
Do	20	605	3025
Do	253	650	3029
Do	261	632	3028
Do	360	655	3030
Do., (lessees North Brookfield)	396	755	3031
Do	408	1261	6069
Do	438	630	3032
Do	441	629	3027
Do	447	617	3026
Boston and New York Air-Line	332	913	5014
Boston and Providence	93	608	3055
Do	301	633	3037
Boston, Clinton, Fitchburg and New Bedford	108	642	3052
Do	115	641	3051
Do	158	631	3046
Do	159	644	3047
Do	198	746	3053
Do	243	659	3049
Do	252	656	3048
Do	363	639	3030
Breakwater and Frankford	387b	9506	.....
Bridgeton and Port Norris	494	7033	.....
Brunswick, Chillicothe and Saint Louis. (See Hatch and Van Every.)			
Buffalo and Jamestown	207	1290	6091
Buffalo, New York and Philadelphia	223	1249	6058
Burlington and Southwestern	359	27008	.....
Cayuga	213	1284	6089
Cazenovia, De Ruyter and Canistota	377	1272	6080
Central, of Iowa, (lessees Grinnell and Montezuma)	298	27032	.....
Central, of New Jersey	90	7001	.....
Do	215	7003	.....
Do	425	8102	8100
Do	448	8099	8097
Do	469	8103	.....
Do	470	7002	.....
Central Ohio	46	21001	.....
Do	47	21001	.....
Do	152	21001	.....
Central Pacific	113	46003	.....
Central Railroad and Banking Company	150	15012	.....
Do	180	15010	.....
Do	188	15005	.....
Central Vermont	69	407	2005
Do	76	744	3062
Do	119	902	5009
Do	143	647	3061
Champlain and Saint Lawrence	112	1258	6066
Cheshire	82	645	3055
Chester and Lenoir Narrow Gauge	372	14007	.....
Chicago, Burlington and Quincy	288	27033	.....
Cincinnati, La Fayette and Chicago	53	22029	.....
Cincinnati, Sandusky and Cleveland	306	9025	21021
Cincinnati, Wabash and Michigan	334	22022	.....
Cleveland, Columbus, Cincinnati and Indianapolis	33	21042	.....
Do	41	21042	.....
Clover Hill, (late Richmond and Petersburg)	501	11017	.....
Columbus and Cincinnati	30	21014	.....
Columbus and Toledo	313	21053	.....
Columbus and Xenia	31	21014	.....
Columbus, Chicago and Indiana Central	37	21015	.....
Concord	34	251	1001
Do	226	255	1002
Do	289	262	1004
Do	300	256	1003
Concord and Claremont	107	254	1009
Do	287	258	1010
Connecticut Central, (late Connecticut Valley and Springfield)	199	991	5016
Connecticut River	62	648	3067
Do	210	649	3056
Connecticut Valley	251	914	5015
Connecticut Valley and Springfield. (See Connecticut Central.)			
Connecticut Western	278	916	5018
Consolidated European and Northwestern	73	9	12
Do	162	244	13
Cooperstown and Susquehanna Valley	241	1278	6086
Crown Point Iron Company	489	1816	.....
Do	490	1816	6099
Cumberland and Pennsylvania	394	10011	.....
Dayton and Southeastern	414	21054	.....

Index to Table E—Continued.

Title.	Order.	Number of route.	New number of route.
Delaware and Maryland	256a	9503	.....
Delaware and Hudson Canal	96	1221	6024
Do	97	1224	6026
Do	129	1823	6033
Do	136	1245	6028
Do	144	1224	6026
Do	185	1224	6026
Do	247	1815	6032
Do	248	1815	6032
Do	327	1223	6025
Do	335	8018	8018
Do	391	1280	6029
Do	450	1803	6031
Do	459	1802	6030
Delaware, Lackawanna and Western	124	7028	.....
Do	163	1229	6041
Do	164	1230	6042
Do	165	8019	.....
Do	221	1228	6040
Do	246	1231	6043
Delaware Shore	456	7039	.....
Denver and Rio Grande	179	38001	.....
Dorchester and Delaware	369	10008	.....
Dutchess and Columbia	338	1277	6085
Do	449a	1277	6085
Duxbury and Cohasset. (See Old Colony.)			
Eastern	468	360	1016
Eastern Shore	22ea	9502	.....
East Tennessee, Virginia and Georgia	66	19002	.....
Do	101	19002	.....
Emmittsburg	406	10019	.....
Erie	19	1201	6001
Do	26	1201	.....
Do	35	1207	6007
Do	70	1208	6008
Do	102	1208	.....
Do	177	1205	6005
Do	202	1204	6004
Do	224	1206	6006
Do	262	8009	.....
Do	280	1209	6009
Do	281	1204	6004
Do	307	1202	6002
Do	383	8065	8064
Do	400	7030	.....
Do	463	1210	6010
Erie and Pittsburgh	111	8045	8044
Erie, (lessees)	473	8024	.....
Fairland, Franklin and Martinsville	118	22016	.....
Fall Brook Coal Company	194	8066	8065
Do	361	8081	8065
Fall River, Warren and Providence	227	804	4005
Flushing, North Shore and Central	276	1296	6094
Do	370	1296	6094
Do	401	1296	6094
Fonda, Johnstown and Gloversville	204	1273	6081
Freehold and Jamesburg Agricultural	349	7023	.....
Gloversville and Northville	182	1813	6098
Do	183	1813	6098
Grand Trunk	95	6	7
Do	140	24007	.....
Greenwich and Johnsonville	471	1274	6082
Grinnell and Montezuma. (See Central, of Iowa.)			
Hanover Branch	257	8034	8033
Do	433	8104	8102
Do. (See Pennsylvania.)			
Harrisburg and Potomac	460	8059	8058
Hartford, Providence and Fishkill	175	911	5007
Hartford, Providence and Fishkill	368	912	5008
Hatch & Van Every, (lessees Brunswick, Chillicothe and Saint Louis)	346	28013	.....
Havana, Rantoul and Eastern	464	23058	.....
Hempfield	316	8041	8040
Hot Springs	216	29006	.....
Housatonic	151	909	5012
Do	392	909	5012
Do	493	909	5012
Huntingdon and Broad Top	255	8035	8034
Do	265	8035	8034
Indianapolis and Saint Louis	64	22025	.....
Indianapolis, Bloomington and Western	100	22017	22018
Indianapolis, Cincinnati and La Fayette	42	22003	.....
Do	43	22005	.....
Iron Mountain, Chester and Eastern	142	23047	.....
Junction and Breakwater	367a	9504	.....
Kansas City, Burlington and Santa Fé	181	33015	.....
Kent County	274	10012	.....
Knox and Lincoln	127	13	15
Knoxville and Maryville	436	19017	.....
Lackawanna and Bloomsburg	156	8017	.....
La Fayette, Muncie and Bloomington	111	22035	.....
Lake Shore and Michigan Southern	1	1241	.....
Do	4	21007	.....
Do	6	1241	.....
Do	7	21045	.....
Do	8	21045	.....
Do	9	1241	6052
Do	12	1241	6052
Do	14	1241	.....
Do	17	1241	6052
Do	21	21007	.....
Do	23	1241	6052
Do	63	1241	.....
Do	88	24001	.....
Do	357	8046	8045
Laurel Fork and Sand Hill	483	12004	.....
Leavenworth, Lawrence and Galveston	169	33008	.....
Do	237	33003	.....
Do	275	33003	.....
Lehigh and Lackawanna	402	8047	8046
Lehigh Valley	56	8077	8075
Do	121	8010	.....
Do	167	(2412* / 2416)	8016
Do	195	2416*	8016
Do	196	2412	8012
Do	197	2416*	8016
Do	373	2411	8011
Long Island	157	1233	6045
Do	161	1233	6045
Do	208	1234	6046
Do	119	1806	6047
Do	110	1232	6044
Do	461	1825	6100
Los Angeles and Independence	166	16021	.....
Louisville and Nashville	134	20019	.....
Louisville, New Albany and Chicago	191	22008	.....
McKean and Buffalo	451	8093	8091
Macon and Brunswick	217	15013	.....
Maine Central	51	2	5
Do	52	2	5
Do	59	5	6
Do	60	5	6
Do	61	5	6
Do	74	2	5

* Part.

Index to Table E—Continued.

Title.	Order.	Number of route.	New number of route.
Maine Central	106	5	6
Do	137	1	1
Do	138	1	1
Do	146	1	1
Do	184	34	3
Do	256	11	4
Do	295	3	2
Manchester and Lawrence	79	622	3063
Marietta and Cincinnati	38	9032	21028
Do	39	21028	.....
Marietta, Pittsburgh and Cleveland	283	9044	21040
Do	321	21040	.....
Middleburgh and Schoharie	388	1246	6055
Middletown and Crawford	432	1292	6092
Missouri and Western	279	28020	.....
Missouri Pacific	48	28001	.....
Missouri River, Fort Scott and Gulf	181	33005	.....
Mobile and Ohio	488	18004	.....
Mont Alto	482	8079	8077
Montclair and Greenwood Lake	478	7034	.....
Montpelier and Wells River	205	528	2012
Montrose	474	8080	8078
Morris and Essex	110	7013	.....
Do	433	7014	.....
Nashua and Rochester	154	371	1012
Naugatuck	120	908	5011
Do	386	908	5011
Nevada County Narrow Gauge	314	46020	.....
Newark and Bloomfield	364	7027	.....
New Castle and Franklin	398	8098	8096
New Haven and Derby	245	915	5017
New Haven and Northampton	91	906	5010
Do	354	906	5010
Do	417	661	3069
New Jersey and New York	365	7024	.....
New Jersey Midland	173	7037	.....
New Jersey Southern	218	7026	.....
Do	347	7026	.....
Do	420	7029	.....
Do	439	7026	.....
New Jersey West Line	428	7036	.....
New Orleans and Selma	491	17022	.....
New Orleans, Mobile and Texas	98	17013	.....
Newport and Wickford Railroad and Steamboat Company	272	825	4003
New York and Harlem	125	1219	.....
Do	302	1291	.....
New York and New England	80	607	3034
Do	81	607	3034
Do	85	975	5002
Do	131	607	3034
Do	132	607	3034
Do	249	975	5002
Do	259	606	3033
Do	330	607	3034
Do	331	607	3034
New York and Oswego Midland	341	1235	6048
Do	362	1238	6049
Do	374	1240	6050
Do	429	1235	6048
New York Central and Hudson River	2	1217	.....
Do	3	1211	.....
Do	13	1211	.....
Do	104	1211	.....
Do	292	1814	.....
Do	345	1265	6019
New York, Kingston and Syracuse. (See Ulster and Delaware.)			
New York, New Haven and Hartford	16	907	5006
Do	18	905	5005
Do	84	904	5004
Do	25	903	5003
Do	130	905	5005
New York, Providence and Boston	103	802	4002
Northern	65	253	1008
Do	297	253	1008
Northern Central	68	10002	.....
Do	83	8021	.....
Do	118	1255	6063
Do	413	8023	.....
Do	487	10018	.....
Northern, of New Jersey	352	7017	.....
North Brookfield. (See Boston and Albany.)			
Ohio and Toledo	427	21009	.....
Old Colony	87	637	3041
Do	89	609	3038
Do	105	634	3039
Do	109	638	3042
Do., (late South Shore)	235	636	3064
Do	269	737	3045
Do	305	640	3043
Do	308	609	3038
Do	337	653	3044
Do., (late Duxbury and Cohasset)	419	747	3065
Do	467	635	3040
Omaha and Northwestern	290	34003	.....
Oswego and Syracuse	126	1256	6064
Paris and Danville	273	23050	.....
Peach Bottom	370	8094	8092
Do	479	8096	8094
Pennsborough and Harrisville	435	12005	.....
Pennsylvania	15	8001	.....
Do., (lessees Philadelphia and Erie)	72	8022	.....
Do.....do	122	8022	.....
Do.....do	123	8022	.....
Do	149	7005	.....
Do	160	7005	.....
Do	176	7008	.....
Do	206	8027	.....
Do	231	8040	8039
Do., (lessees)	232	8036	8035
Do	240	8039	8038
Do	254	8043	8042
Do	260	8039	8038
Do	322	8015	.....
Do	336	8074	8072
Do	351	8054	8053
Do	353	8033	8032
Do., (lessees)	366	8038	8037
Do	387	8048	8047
Do	395	8050	8049
Do	404	7009	.....
Do	431	7038	.....
Do	442	7005	.....
Do	449	8090	8088
Do	452	8086	8084
Do., (operating Southwestern)	454	8107	8104
Do	457	8101	8099
Do	477	7010	.....
Do	485	8085	8083
Petersburg	77	11009	.....
Philadelphia and Baltimore Central	174	8008	.....
Philadelphia and Erie. (See Pennsylvania.)			
Philadelphia and Reading	45	8075	.....
Do	114	8002	.....
Do	116	8075	8073
Do	264	8014	.....
Do., (lessees Philadelphia, Germantown and Norristown)	311	8005	.....
Do	312	8013	.....
Do	382	8057	8056
Do	384	8057	8056
Do	399	8028	.....
Do	416	8063	8062

Index to Table E—Continued.

Title.	Order.	Number of route.	New number of route.
Philadelphia and Reading	421	8051	8050
Do	426	8067	8066
Do., (lessees Berks County)	453	8091	8089
Do	472	8060	8059
Do	475	8062	8061
Do	480	8058	8057
Do	497	8007	.....
Do	498	8076	8074
Philadelphia, Germantown and Norristown. (See Philadelphia and Reading.)			
Pine River Valley and Stevens Point	415	25029	.....
Pittsburgh and Castle Shannon	499	8097	8095
Pittsburgh and Connellsville	130	8064	8063
Do	166	8064	.....
Do	317	8064	8063
Do	318	8064	.....
Do	403	8064	8063
Do	410a	8064	8063
Pittsburgh, Cincinnati and Saint Louis	22	21032	.....
Do	29	21027	.....
Do	230	8056	8055
Pittsburgh, Fort Wayne and Chicago	75	21002	.....
Do	99	8029	.....
Pittsburgh, Titusville and Buffalo	219	8025	.....
Do	437	8070	8068
Pittsburgh, Virginia and Charleston	220	8083	8081
Placerville and Sacramento Valley	284	46004	.....
Poughkeepsie, Hartford and Boston	390	1271	6079
Portland and Rochester	200	7	8
Providence and Springfield	381	823	4006
Providence and Worcester	117	801	4001
Do	303	736	3069
Do	304	662	3059
Providence, Warren and Bristol	225	803	4004
Queen Anne and Kent	375	10010	.....
Reading and Columbia	320	8031	.....
Do	389	8031	.....
Rhinebeck and Connecticut	367	1812	6097
Richmond and Danville	86	11006	.....
Richmond and Petersburgh	78	11008	.....
Do...(See Clover Hill.)			
Richmond, Fredericksburg and Potomac	36	11001	.....
Richmond, York River and Chesapeake	285	11007	.....
Rochester and Pine Creek	296	1262	6070
Rome and Clinton	379	1239	6051
Rome, Watertown and Ogdensburgh	94	1227	6036
Do	201	1225	6034
Do	209	1226	6035
Do	211	1227	6036
Do	242	1287	6038
Do	310	1267	6037
Sacramento Valley	238	46005	.....
Saint Croix and Penobscot	309	4	17
Saint Louis, Keokuk and Northwestern	171	28018	.....
Sandusky, Mansfield and Newark. (See Baltimore and Ohio.)			
Santa Cruz	329	46022	.....
Seaboard and Roanoke	267	11015	.....
Schoharie Valley	178	1247	6056
Scioto Valley	315	9055	21051
Shenandoah Valley	397	11019	.....
Shenango and Allegheny	263	8052	8051
Shepang	228	917	5019
Sioux City and Pembina	299	27034	.....
Skaneateles	291	1251	6060
Somerset	328	231	18
Somerset and Mineral Point	409	8072	8070
Southern Central	250	1276	6084
Southern, of Long Island	339	1295	6093
Southern Pacific	500	8053	8052
South Mountain Iron Company	170	46018	46018
South Shore. (See Old Colony.)			
Southwestern	187	15011	.....
Do	203	15016	.....
Do..(See Pennsylvania.)			
Springfield, Athol and Northeastern	236	658	3068
State Line and Sullivan, (late Sullivan and Erie Coal Company)	455	8061	8060
Staten Island	293	1260	6068
Sullivan and Erie Coal Company. (See State Line and Sullivan.)			
Summit Branch	393	8106	8106
Syracuse and Chenango	282	1264	6071
Syracuse, Binghamton and New York	141	1257	6065
Tennessee Coal and Railroad Company	465	19013	.....
Terre Haute and Indianapolis	28	23031	.....
Do	32	22002	.....
Texas and New Orleans	495	31013	.....
Tioga	266	{8020 {8109}	8020
Do	440	8020	.....
Do	444	8020	.....
Do	445	8020	.....
Toledo, Wabash and Western	27	21019	.....
Do	67	23023	.....
Do	212	21019	.....
Towanda Coal Company, (lessee Barclay)	484	8071	8069
Ulster and Delaware, (late New York, Kingston and Syracuse)	340	1268	6073
Utica and Black River	192	1288	6088
Do	229	1283	6087
Do	422	1288	6088
Do	424	1294	6039
Utica, Clinton and Binghamton	356	1248	6057
Utica, Ithaca and Elmira	233	1269	6074
Do	286	1286	6075
Do	326	1286	6075
Do	385	1289	6076
Vineland	476	7031	.....
Visalia	294	46019	.....
Wallkill Valley	492	1275	6083
Warwick Valley	371	1253	6062
Washington and Ohio	268	11004	.....
Washington City, Virginia Midland and Great Southern	49	11002	.....
Do	277	11003	.....
Do	343	11016	.....
Do	344	11002	.....
Western Maryland	189	10006	.....
Westchester and Philadelphia	186	8003	.....
West Jersey	128	7018	.....
Do	168	7019	.....
Do	258	7020	.....
Do	358	7021	.....
Do	423	7022	.....
Wicomico and Pocomoke	376	10009	.....
Wilmington and Northern	412	8055	8054
Wilmington and Western	481a	9505	.....
Worcester	378	10016	.....
Worcester and Nashua	133	643	3066
Do	142	371	1012
Worcester and Somerset	443	10015	.....
Worthington and Sioux Falls	462	26019	.....
Wyandotte, Kansas City and Northwestern	405	28033	.....

F.—*Table showing the readjustment of the rates of pay per mile on railroad-routes in States and on certain new routes the adjustment of the rates, based upon returns of the weight of and the number of trips per week, in accordance with the act of March 3, 1873; and with the*

[ABBREVIATIONS.—*f. f.*, fixtures and furniture; *f. f. c.*, fixtures and furniture complete; m. c., mail-line; d. l., double line; t. l., triple line; q. l., quadruple line; m., miles; r. a., route-agents; m. m., ures in parentheses in the "Remarks" column refer to the order of the routes in this table.]

Order.	State.	Number of route.	New number of route.	Termini.	Corporate title of company carrying the mail.	Length of route.	Average weight of mails whole distance per day.	Miles per hour.
						Miles.	*Pounds.*	
1	N. J	7004	.....	New York, West Philadelphia.	Pennsylvania	90	69,554	30
2	Pa	8001	.....	Philadelphia, Pittsburgh.	do	353.6	48,547	28
3	N. Y.	1241	6052	Cleveland, Elyria, Millbury, Toledo.	Lake Shore and Michigan Southern.	34.2	38,255	29
4	N. Y.	1241	6052	Buffalo, Cleveland	do	184.5	38,255	29
5	N. Y.	1241	.....	Millbury, Toledo	do	8.5	36,164	.....
6	N. Y.	1241	.....	Buffalo, Elyria	do	210.2	36,164	.....
7	N. Y.	1241	6052	Elkhart, Chicago	do	101	32,437	29
8	N. Y.	1241	6052	Elyria, Millbury	do	79.3	38,255	29
9	N. Y.	1241	.....	do	do	79.3	36,164	.....
10	N. Y.	1241	.....	Elkhart, Chicago	do	101	30,444	.....
11	N. Y.	1217	.....	Albany, Buffalo	New York Central and Hudson River.	298	38,870	30
12	Conn	907	5006	New Haven, New York.	New York, New Haven and Hartford.	73.78	36,502	28½
13	Ohio	21045	21045	Toledo, Elkhart	Lake Shore and Michigan Southern.	133.6	27,240	29
14	N. Y.	1211	.....	New York, Albany	New York Central and Hudson River.	144	36,076	30
15	Ohio	21032	21032	Columbus, Pittsburgh	Pittsburgh, Cincinnati and Saint Louis.	193	29,913	28

in which the contract-term expired June 30, 1877, and also in other States and Territories, the mails, the speed with which they are conveyed, the accommodations for mails and agents, act of July 12, 1876, in the case of readjustments taking effect on and after July 1, 1876.

catchers; r. p. o., railway post-office; apt., apartment; b. c., baggage-car; l., line or lines; s. l., single mail-messenger. A number followed by an asterisk (*) shows the equivalent in round trips. The fig-

Size, &c., of mail-car or apartment.	Trips per week.	Pay per mile per annum.	Former pay per mile per annum.	Amount of annual pay.	Former amount of annual pay.	Date of readjustment or adjustment.	Remarks.	Order.
Feet and inches		*Dolls.*	*Dolls.*	*Dolls.*	*Dolls.*			
r. p. o., 60 by —, d. l.; 45 by —, d. l.; tender, 29 by —, f. f. c., 1½ l.	98*	1,101 40	839 30	99,126 00	75,537 00	Jan. 1, 1877	In March, 1877.....	1
r. p. o., 60 by —, d. l.; 29 by 8½, f. f. c., d. l.	42*	805 60	548 00	284,860 16	207,209 60	Jan. 1, 1877	In March, 1877.....	2
r. p. o. 50 by 9, 50 by 9, 40 by 9, 60 by 9, 18 by 8.6, 1 l. each, f. f. c.	19*	719 15	667 60	24,615 45	22,831 92	Jan. 1, 1877	Formerly 8.5 miles at $678. Part; residue $708.50, $649.12, $251.80, $665.30, (4, 7, 8, 41.)	3
r. p. o., 50 by 9, 40 by 9, 60 by 9, 50 by 9, f. f. c., q. l.	19*	708 50	667 60	130,718 25	123,172 20	Jan. 1, 1877	Part; residue $719.15, $665.30, $649.12, $251.80, (3, 7, 8, 41,) 60 days in Feb. and Mar., 1877.	4
r. p. o., 40 by 9, t. l.; 50 by 9, s. l.; 36 by 9, s. l.; 18 by 9, s. l.	16*	678 85	1,001 00	5,770 22	8,508 50	July 23, 1876	In Nov., 1876. Part; residue $667.60, $628.22, $601.20, $313, (6, 9, 10, 28.)	5
r. p. o., 40 by 9, t. l.; 50 by 9, s. l.; 36 by 9, s. l.; f. f. c.	16*	667 60	989 75	140,329 52	208,334 57	July 23, 1876	Part; residue $628.22, $678.85, $313. $601.20, (9, 5, 28, 10.) In Nov., 1876. Formerly 25.7 miles at $1,001.	6
r. p. o, 50 by 9, 36 by 9, 40 by 9, 60 by 9, 1 l. each; f. f. c.	19*	665 30	601 20	67,195 30	60,721 20	Jan. 1, 1877	60 days in Feb. and March, 1877. Part; residue $719.15, $708.50, $649.12, $251.80, (3, 4, 8. 41.)	7
r. p. o., 50 by 9, ½ l.; 40 by 9, 1 l.; 60 by 9 ½ l.; 50 by 9, ½ l.; 18 by 8.6, ½ l.; f. f. c.	19*	649 12	628 22	51,475 21	49,817 84	Jan. 1, 1877	Part; residue $719.15, $708.50, $665.30, $251.80, (3, 4, 7, 41,) 60 days in Mar. and Feb., 1877.	8
r. p. o, 36 by 9, s. l.; 40 by 9, d. l.; 50 by 9, ½ l.; 18 by 9, ½ l.	16*	628 22	197 37	49,817 84	15,651 84	July 23, 1876	Part; residue $678.85, $667.60, $601.20, $313, (5, 6, 10, 28.)	9
r. p. o., 40 by 9, d. l.; 50 by 9, s. l.; 36 by 9, d. l; f. f. c.	16*	601 20	817 50	60,721 20	82,567 50	July 23, 1876	Part; residue $667.60, $628.22, $678.85, $313, (5, 6, 9, 28.) In Nov., 1876.	10
r. p. o., 46 9 by 8.11, f. f. c., s. l.	38¾*	590 70	944 20	176,028 60	281,371 60	July 23, 1876	In Nov. and Dec., 1876.	11
r. p. o., 35.10½ by 8.9. 24.10 by 8.8½; f. f. c and m. c., d. l.; r. s. apt., 14.10 by 6.5, f. f. c. and m. c., d. l.	57½*	588 70	535 50	43,431 28	40,876 50	July 1, 1877	2.55 miles decrease..	12
r. p. o., 60 by 9, 1 l.; 50 by 9, 2. l.; f. f. c.	13	560 20	476 10	74,842 72	63,606 96	Jan. 1, 1877	60 days in Feb. and Mar., 1877.	13
r. p. o., (average.) 46.9 by 8.11, f. f. c., s. l.	46½*	559 20	905 50	80,524 80	130,392 00	July 23, 1876	Part; residue $168.30, (69.) In Nov., 1876.	14
r. p. o., 50 by —, f. f. c., s. l.	14	499 90	343 80	96,480 70	66,353 40	Jan. 1, 1877	60 days in Feb. and Mar., 1877. Main route; no adjustment on branch, (—) Additional r. p. o from Feb. 12 and Mar. 5, 1877.	15

F.—*Table showing the readjustment of the rates of pay per mile on railroad-routes*

Order.	State.	Number of route.	New number of route.	Termini.	Corporate title of company carrying the mail.	Length of route.	Average weight of mails whole distance per day.	Miles per hour.
						Miles.	*Pounds.*	
16	Ohio..	21045	21045	Toledo, Elkhart.....	Lake Shore and Michigan Southern.	133.6	23,385	28
17	Conn.	905	5005	New Haven, Springfield.	New York, New Haven and Hartford.	62.91	24,201	30½
18	Mass.	605	3025	Boston, Springfield...	Boston and Albany	97.76	24,849	30
19	N. Y..	1201	.....	New York, Dunkirk	Erie	459	15,659	32
20	Ind...	22002	22002	Indianapolis, Terre Haute.	Terre Haute and Indianapolis.	73	18,085	34
21	Ohio..	21007	21007	Elyria, Millbury	Lake Shore and Michigan Southern.	74.96	15,152	29
22	Ohio..	21015	21015	Columbus, Indianapolis.	Columbus, Chicago and Indiana Central.	188	17,286	27
23	Ill....	23031	23031	East Saint Louis, Terre Haute.	Terre Haute and Indianapolis.	165.4	17,064	34
24	Ohio..	21007	21007	Elyria, Millbury	Lake Shore and Michigan Southern.	74.96	15,596	28
25	N. Y..	1201	6001	New York, Dunkirk .	Erie	459	12,312	35
26	Md...	10003	10003	Baltimore, Wheeling.	Baltimore and Ohio	393.17	12,138	25
27	Mo...	28001	28001	Saint Louis, Atchison.	Missouri Pacific	329.75	10,696	25

es in which the contract-term expired June 30, 1877, *&c.*—Continued.

., of mail- or apart-	Trips per week.	Pay per mile per annum.	Former pay per mile per annum.	Amount of annual pay.	Former amount of annual pay.	Date of readjustment or adjustment.	Remarks.	Order.
nd inches.		*Dolls.*	*Dolls.*	*Dolls.*	*Dolls.*			
40 by 9, 2 by 9, 1 l.;	12	476 10	730 90	63,606 96	97,648 24	July 23, 1876	In November, 1876 ..	16
35.10½ by .10 by 8.8½, and m. c.,	40½*	441 00	447 30	27,743 31	28,552 65	July 1, 1877	Main route; no adjustment on branch, (—.) .92 m. decrease.	17
25 by 8, by 8, f. f. c., apt., 14 by l. to South ingham,	41½*	440 70	619 50	43,091 64	62,569 50	July 1, 1877	Part; residue $295.10, (35,) 1.35 m. decrease on whole route.	18
50 by 10, f. l. to Horville, 332 l residue, .; r. a. apt., y 7, f. f.; a. 'ort Jervis,	17½*	379 70	292 00	169,202 30	128,948 00	July 23, 1876	Formerly $252 on 127 m. 127 miles at $339.70. In Nov., 1876.	19
50 by —, f. a. l.	19	366 70	265 00	26,769 10	19,345 00	Jan. 1, 1877	60 days in Feb. and March, 1877; r. p. o. 60 by —, 60 by —, 50 by —, 1 l. each, additional from Feb. 12, 1877.	20
50 by 9, 60 18 by 8 6, eb. f. f. c.	19	364 02	349 42	27,294 21	26,199 51	Jan. 1, 1877	60 days in Feb. and Mar., 1877.	21
50 by —, f.	14	357 70	243 40	67,247 60	45,759 20	Jan. 1, 1877	60 days in Feb. and Mar., 1877; 1 additional line, r. p. o., 60 by —, from Feb. 12, 1877.	22
50 by —, s.	19	355 00	272 00	58,717 00	44,988 80	Jan. 1, 1877	60 days in Feb. and Mar., 1877; additional r. p. o. from Feb. 12, 1877.	23
40 by 9, 40 50 by 9, 18 f. f. c., ½ l.	9*	349 42	885 62	26,199 51	66,403 78	July 23, 1876	In November, 1876 ..	24
50 by 10, f. l. l. to Horville, 332 .l. residue, .; r. a. apt., y 7, f. f., s. 'ort Jervis, m.; r. a. 13 by 9.4, age.) f. f., Elmira to ing, 17.50	17½*	341 90	379 70	151,852 10	169,202 30	Jan. 1, 1877	60 days in Feb. and Mar., 1877. Formerly $339.70 on 127 miles. $301.90 on 127 m.	25
. 51.7½ by f. f., d. l. to on, 294 m.; residue, m.; r. a. 16 by 8 6, Baltimore int Denis; t of Rocks Harper's r; Grafton heeling, .	22*	340 10	305 90	129,750 31	116,258 70	Apr. 1, 1877	Formerly 99 m. at $265.90. $300.10 per m. on 99.17 m., .17 m. increase.	26
50 by 9, f d. l. 2×2 s. a. l. resi- 47.75 m.	13⅜*	323 90	228 00	103,091 16	83,178 34	March 1, 1877	37 m. at $275.12.; 47.75 m. at $283.90. In March, 1877.	27

F.—*Table showing the readjustment of the rates of pay per mile on railroad-routes*

Order.	State.	Number of route.	New number of route.	Termini.	Corporate title of company carrying the mail.	Length of route.	Average weight of mails whole distance.	Miles per hour.
						Miles.	*Pounds.*	
28	N. Y..	1241	.....	Toledo, Elkhart.....	Lake Shore and Michigan Southern.	143	8,619	.....
29	Ind ...	22005	22005	Indianapolis, La Fayette.	Indianapolis, Cincinnati and La Fayette.	654	10,843	36
30	Va ..	11001	11001	Washington, Richmond.	Richmond, Fredericksburg and Potomac.	131	12,054	27
31	Ohio..	.....	21014	Columbus, Xenia.....	Columbus and Xenia.....	55	12,737	28
32	Ohio..	21027	21027	Cincinnati, Xenia.....	Pittsburgh, Cincinnati and Saint Louis.	65.96	12,731	28
33	Md ...	10003	10003	Baltimore, Wheeling	Baltimore and Ohio.....	393	9,128	27
34	Ind ...	22003	22003	Indianapolis, Cincinnati.	Indianapolis, Cincinnati and La Fayette.	113.5	9,808	36
35	Mass .	605	3025	Springfield, Albany ..	Boston and Albany	103.87	12,173	30
36	Ind ...	22029	22029	La Fayette, Kankakee.	Cincinnati, La Fayette and Chicago.	75.75	9,050	35
37	Me ...	5	6	Portland, Cumberland Junction.	Maine Central	11	9,382	25
38	Me ...	5	6	Cumberland Junction, Augusta.	.....do	52.28	8,515	25
39	Ohio..	21028	21028	Cincinnati, Parkersburg.	Marietta and Cincinnati	195.15	8,101	30
40	Ohio..	21047	21047	Chicago, Ohio, Chicago, Ill.	Baltimore and Ohio, (operating Baltimore, Pittsburgh and Chicago.)	271,53	8,057	31
41	N. Y..	1241	6052	Toledo, Elkhart.....	Lake Shore and Michigan Southern.	143	7,215	29
42	Va ...	11008	11008	Richmond, Petersburg.	Richmond and Petersburg....	24.07	6,857	29
43	W.Va.	12002	12002	Grafton, Parkersburg.	Baltimore and Ohio.....	104.58	7,340	29
44	Ohio..	21019	21019	Toledo, Quincy.....	Toledo, Wabash and Western	476	7,008	30
45	Ohio..	21028	21028	Cincinnati, Parkersburg.	Marietta and Cincinnati	195.15	6,718	30

in States in which the contract-term expired June 30, 1877, *&c.*—Continued.

Size, &c., of mail-car or apartment.	Trips per week.	Pay per mile per annum.	Former pay per mile per annum.	Amount of annual pay.	Former amount of annual pay.	Date of readjustment or adjustment.	Remarks.	Order.
Feet and inches.		*Dolls.*	*Dolls.*	*Dolls.*	*Dolls.*			
r. p. o., 36 by 9, 3 l., 40 by 9, 1 l., f. f. c.	16*	313 00	199 25	44,759 00	28,492 75	July 23, 1876	Part; residue $628.22, $678.85, $601.20, $667.60, (5, 6, 9, 10.) In November, 1876.	28
r. p. o., 40 by —, 50 by —, f. f. c., d. l.	19	310 70	234 40	20,389 68	15,382 50	March 1, 1877	In March, 1877	29
r. p. o., 42 by 8.10, f. f., d. l.	13	309 20	243 50	40,505 20	31,898 50	July 1, 1877	.....	30
r. p. o., 50 by —, f. f., s. l.	14	306 40	265 90	16,852 00	14,624 50	Jan. 1, 1877	60 days in Feb. and March, 1877. Two 60 feet r. p. o. cars from Feb. 12, 1877. Ex. to cover route 21027 from July 1, 1877.	31
r. p. o., 50 by —, f. f., s. l.	14	306 40	266 80	20,210 14	17,598 12	Jan. 1, 1877	60 days in Feb. and March, 1877. Two 60 feet r. p. o's from Feb. 12, 1877. Covered from July 1, 1877, by route 21014.	32
r. p. o., 51.7½ by 8.10. f. f. c., d. l. to Grafton, 294 m.; s. l. residue, 99 m.; apt. in b. c. 16 by 8.6, f. f., no. r. a. 99 m.	32¾*	305 90	297 80	116,258 70	104,075 40	Oct. 1, 1876	In Oct. 1876. Formerly 99 m. at $257.80. 99 m. at $265.90.	33
r. p. o., 40 by —, 50 by —, f. f. c., d. l.	19	299 00	235 30	33,936 50	26,706 55	March 1, 1877	In March, 1877	34
r. p. o., 28.2 by 9, f. f. c., d. l.	41⅞*	295 10	360 60	30,652 03	36,781 20	July 1, 1877	Part; residue $440.70, (18,) 1.35 m. decrease on whole route.	35
r. p. o., 50 by —, 40 by —, f. f. c., d. l.	13	290 00	224 50	21,967 50	17,005 87	March 1, 1877	In March, 1877	36
r. p. o., 44.6 by 8.9, say 42.6 by —. (See old report.) f. f. c., d. l., apt., 15.10 by 6.7½, f. f., s. l.	20¼*	278 60	210 00	3,064 60	2,585 00	July 1, 1877	.72 m. decrease on whole route. Part: residue $268.70. (38.) Main route; branch $94.50, (125.)	37
r. p. o., 44.6 by 8.9, say 42.6 by —. (See old report.) f. f. c., d. l., apt., 15.10 by 6.7½, f. f., s. l.	20¼*	268 70	210 00	14,047 63	12,455 00	July 1, 1877	.72 m. decrease on whole route. Part: residue $278.60, (37.) Main route; branch $94.50, (125.)	38
r. p. o., 52.4 by —, f. f. c., s. l.	15¼*	254 20	238 90	49,607 13	46,621 33	April 1, 1877	In April, 1877	39
r. p. o., 51.7½ by 8.10, f. f., s. l.	13	254 20	215 50	69,022 92	58,514 71	Oct. 1, 1876	In November, 1876 ..	40
r. p. o., 36 by 9, 40 by 9, f. f. c., d. l.	19*	251 80	313 00	36,007 40	44,759 00	Jan. 1, 1877	60 days in Feb. and March, 1877. Part: residue $719.75, $708.50, $665.30, $649.12, (3, 4, 7, 8.)	41
r. p. o., 42 by —, f. f. c., d. l.	20	250 70	163 80	6,034 34	5,296 16	July 1, 1877	Formerly $150 per annum for m. m. service.	42
r. p. o., 51.7½ by 8.10, f. f. c., s. l.; apt. 16 by 8.6, f. f., no r. a.	20	246 10	234 40	25,737 13	24,513 55	April 1, 1877	In April, 1877	43
r. p. o., 50.8 by 10, f. f., s. l.	12	242 50	273 00	115,430 00	129,948 00	July 1, 1876	In Nov., 1876. Main route; branch $54. (256.)	44
r. p. o., 52.4 by 9, f. f., s. l.	14	239 80	243 40	46,621 33	47,499 51	Oct. 1, 1876	In October, 1876	45

F.—*Table showing the re-adjustment of the rates of pay per mile on railroad routes*

Order.	State.	Number of route.	New number of route.	Termini.	Corporate title of company carrying the mail.	Length of route.	Average weight of mails whole distance per day.	Miles per hour.
						Miles.	*Pounds.*	
46	Me ..	1	1	Augusta, Waterville .	Maine Central	19. 21	5, 739	25
47	W. Va.	12002	12002	Grafton, Parkersburg	Baltimore and Ohio	104 .58	6, 290	31
48	Me ...	2	5	Waterville, Bangor ..	Maine Central	55. 57	5, 174	25
49	Ohio..	21010	21010	Chicago, Newark.....	Baltimore and Ohio, (lessees Sandusky, Mansfield and Newark.)	88	5, 968	27
50	N. H..	251	1001	Concord, Nashua.....	Concord	36. 28	5, 098	27
51	Ohio..	21042	21042	Cleveland, Cincinnati.	Cleveland, Columbus, Cincinnati and Indianapolis.	245. 25	6, 863	36
52	N. Y..	1208	6008	Buffalo, Hornellsville.	Erie	91	9, 065	33
53	Ohio..	21002	21002	Pittsburgh, Chicago..	Pittsburgh, Fort Wayne and Chicago.	469. 5	8, 743	25
54	Ohio..	21001	21001	Bellaire, Newark.....	Central Ohio.....	104½	5, 116	25
55	Ohio..	21042	21042	Cleveland, Cincinnati.	Cleveland, Columbus, Cincinnati and Indianapolis.	245. 25	5, 910	30
56	Va ...	11018	11018	Washington, Alexandria.	Alexandria and Washington..	7	5, 430	17
57	Md ...	10002	10002	Baltimore, Sunbury ..	Northern Central	140. 7	4, 924	23½
58	Va ...	11002	11002	Alexandria, Lynchburg.	Washington City, Virginia Midland and Great Southern.	171. 35	4, 711	23
59	Mass .	648	3067	Springfield, South Vernon Junction.	Connecticut River	50. 46	3, 820	25
60	Va ...	11009	11009	Petersburg, Weldon .	Petersburg	65. 31	5, 053	22
61	Pa....	8022	8022	Sunbury, Williamsport.	Pennsylvania, (lessees Philadelphia and Erie.	39. 82	4, 030	22
62	N. H..	253	1008	Concord, White River Junction.	Northern	69. 64	3, 343	28
63	N. Y..	1208	.....	Buffalo, Hornellsville.	Erie	91	5, 771	32
64	Ohio..	21005	21005	Cleveland, Leavittsburg.	Atlantic and Great Western..	49. 75	5, 079	25
65	Va ...	11013	11013	Lynchburg, Bristol...	Atlantic, Mississippi and Ohio	205	3, 133	22
66	Conn .	904	5004	New Haven, New London.	New York, New Haven and Hartford.	51. 71	4, 754	30
67	Tenn .	19002	19002	Bristol, Chattanooga..	East Tennessee, Virginia and Georgia.	242. 7	2, 755	25
68	Va....	11006	11006	Richmond, Greensborough.	Richmond and Danville.....	189. 67	4, 334	23
69	N. Y..	1211	.....	Albany, Troy	New York Central and Hudson River.	6	4, 261	30
70	Mass .	608	3035	Boston, Providence...	Boston and Providence.....	44. 19	3, 520	35

tes in which the contract-term expired June 30, 1877, &c.—Continued.

c., of mail- or apart-	Trips per week.	Pay per mile per annum.	Former pay per mile per annum.	Amount of annual pay.	Former amount of annual pay.	Date of readjustment or adjustment.	Remarks.	Order.
nd inches.		*Dolls.*	*Dolls.*	*Dolls.*	*Dolls.*			
44.6 by 8.9. 42 6 by —. old report.) ., d. l.	12	238 10	140 00	4,573 90	3,080 00	July 1, 1877	1.01 m. decrease. Part; residue $61.20, (215.)	46
., 51.7½ by f. f., s. l.	26	234 40	236 20	24,513 55	24,701 79	Oct. 1, 1876	In October, 1876.....	47
44.6 by 8.9, by 8.9. See eport.) f. f. l.	9	231 80	225 00	12,881 12	12,375 00	July 1, 1877	Part; residue $75.60, (157.) .18 m. decrease on whole route.	48
., 51.7½ by f. f., s. l.	18*	230 80	224 50	20,310 40	19,756 00	Oct. 1, 1876	Part; residue $58.50, (230.) In November, 1876.	49
41.9 by 8.8, by 6.10, 21 6, f. f., d. l.; apt., 17 by f. f., q. l. to chester, miles.	37½*	229 65	250 00	8,331 70	9,000 00	July 1, 1877	.28 m. increase	50
39.2 by 9.2, d. l. to Gal- 80 m.; s. l. ue, 165.25 m	26½*	225 70	235 60	57,352 92	59,880 90	Nov. 15, 1876	Formerly 80 miles at $260.60 per m. $250.70 per m. for 80 miles. In Nov., 1876.	51
9.8, (aver- f. f., s. l.	24½*	225 00	180 00	20,475 00	16,380 00	Jan. 1, 1877	60 days in Feb. and March, 1877.	52
8.11, f. f. c.,	21¼*	221 40	173 70	103,947 30	81,552 15	Jan. 1, 1877	60 days in Feb. and March, 1877.	53
50 by 8, f. s. l.	18¼*	220 90	228 10	23,166 88	23,921 98	Oct. 1, 1876	Part; residue $78.30, (151.) In Oct., 1876.	54
39.2 by 9.2, d. l., 80 m.; l. residue 5 m.	26½	214 90	235 60	54,704 22	57,352 92	Jan. 1, 1877	Formerly $260.60 on 80 m. $239.90 for 80 m. 60 days in Feb. and March, 1877.	55
40.8 by 8.6, ., s. l.	18½*	209 50	225 00	1,466 50	1,575 00	July 1, 1877	.....	56
44.4 by 8.4, ., s. l.; r. a. 14.8 by 8.7, s. l.	24*	203 20	186 10	28,590 24	26,184 27	July 1, 1877	.....	57
41 by 8.11, ., s. l.	14	200 50	227 50	34,355 67	38,853 90	July 1, 1877	Main route; branch $52.20, (267.) .53 m. increase.	58
23.4 by 6.5 ., d. l.	23½*	190 75	209 50	9,625 24	10,775 00	July 1, 1877	Formerly $300 for m. m. .46 m. increase.	59
8.8½. (size equired by .) 21.6 by f. f. c., d. l.	13	190 00	164 80	12,408 90	10,796 04	July 1, 1877	.19 m. decrease	60
39.2 by 8.7, s. l.	13¾*	189 70	178 75	7,553 85	7,117 82	July 1, 1877	Part; residue $81.90, (143.)	61
41.9 by 8 8, by 6.10, f. f.,	18	183 55	190 00	12,782 42	13,110 00	July 1, 1877	Formerly $1,150 for m. m. .64 m. increase. Main route; brauch $45. (347.)	62
.2, 14 by 9.3, by 9.10, (av- ,) 13.6 by f., s. l.	23½*	180 00	133 00	16,380 00	12,103 00	July 23, 1876	In November, 1876 ..	63
7.10, f. f.,	18*	180 00	94 50	8,955 00	4,701 37	Oct. 1, 1876	Part; residue $62.10, (203.) In Nov., 1876.	64
40.1 by 8.7, ., s. l.	14	176 20	218 50	36,121 00	44,792 50	July 1, 1877	1 m. increase	65
6.10, f. f.,	31	175 50	157 50	9,975 10	7,942 00	July 1, 1877	Formerly $67 for m m. 1.71 m. increase.	66
38.6 by 9, f. s. l.	14	170 80	189 70	41,453 16	46,040 19	April 1, 1877	Main route; branch $90.90, (128.) In April, 1877.	67
.9, f. f., s. l	10½*	169 20	153 00	32,092 16	29,005 74	July 1, 1877	0.09 m. increase	68
.....	46¼*	168 30	126 00	1,009 80	756 00	July 23, 1876	Part; residue $559 20, (14.) In Nov., 1876.	69
6, f. f., d. l.	36	167 50	138 60	7,401 82	6,098 40	July 1, 1877	0.19 m. increase	70

F.—*Table showing the readjustment of the rates of pay per mile on railroad routes*

Order.	State.	Number of route.	New number of route.	Termini.	Corporate title of company carrying the mails.	Length of route.	Average weight of mails whole distance per day.	Miles per hour.
						Miles.	*Pounds.*	
71	Vt ...	407	2005	Brattleborough, Bellows Falls.	Central Vermont	24. 46	3, 264	25
72	Conn	975	5002	East Thompson, Willimantic.	New York and New England	33. 21	3, 228	28
73	R.I...	802	4002	Providence, New London.	New York, Providence and Boston.	63. 94	3, 864	25
74	Pa....	8077	8075	Easton, Allentown ...	Lehigh Valley	17. 84	3, 517	27
75	Mass	643	3066	Worcester, Nashua...	Worcester and Nashua	46. 54	3, 082	30
76	Mass .	607	3034	Boston, East Thompson.	New York and New England	53	3, 186	28
77	Mass .	607	3034	.... .do	.....do	53	3, 069	28
78	Me ...	9	12	Bangor, Vanceborough	Consolidated European and North American.	113. 93	2, 740	25
79	Conn .	975	5002	East Thompson, Willimantic.	New York and New England.	33. 68	2, 923	28
80	Ala...	17013	17013	New Orleans, Mobile	New Orleans, Mobile and Texas	140	2, 791	26
81	Mass .	744	3062	Miller's Falls, Brattleborough.	Central Vermont.....	21. 38	3, 170	30
82	N. J ..	7001	7001	New York, Easton ...	Central, of New Jersey.....	74	2, 433	20
83	Mass	637	3041	Middleborough Hyannis.	Old Colony	45. 29	2, 151	25
84	Pa....	8010	.....	Allentown, Waverly .	Lehigh Valley.....	190. 67	2, 830	27
85	Conn .	913	5014	New Haven, Willimantic.	Boston and New York Air-line.	56	2, 810	27
86	N. H..	371	1012	Nashua, Rochester ...	Nashua and Rochester.....	49. 40	2, 043	28
87	Ohio..	21034	21034	Salamanca, Dayton...	Atlantic and Great Western .	389. 55	2, 644	27
88	Me ...	7	8	Portland, Rochester..	Portland and Rochester	52. 68	1, 930	25
89	N. Y..	1227	6036	Rome, Ogdensburg ...	Rome, Watertown and Ogdensburg.	142	2, 337	30
90	N. J ..	7013	7013	New York, Easton ...	Morris and Essex	87. 40	1, 811	25
91	N. Y..	1224	6026	Albany, Canada line..	Delaware and Hudson Canal Company.	189. 93	2, 119	30
92	Mass .	622	3063	Lawrence, Manchester	Manchester and Lawrence....	27, 06	1, 747	25
93	Ga....	15001	15001	Atlanta, Charlotte....	Atlanta and Richmond Air-line	266. 5	1, 946	26
93a	Mass	609	3038	Boston, Plymouth	Old Colony.....	37. 27	1, 900	25
94	Conn .	906	5010	New Haven, Williamsburg.	New Haven and Northampton	85. 82	1, 633	30
95	Mass .	645	3035	Fitchburg, Bellows Falls.	Cheshire	64. 65	1, 818	30
96	Pa....	8029	8029	New Castle, Homewood.	Pittsburg, Fort Wayne and Chicago.	15. 2	1, 767	25
97	N. J ..	7023	7023	New York, Denville..	Delaware, Lackawanna and Western.	35. 93	1, 496	25
98	Pa....	8042	8041	Pittsburgh, Oil City..	Allegheny Valley.....	132. 60	1, 717	23
99	Cal ...	46003	46003	Roseville, Redding ...	Central Pacific.....	151. 45	1, 714	22

s in which the contract-term expired June 30, 1877, *&c.*—Continued.

, of mail- r apart-	Trips per week.	Pay per mile per annum.	Former pay per mile per annum.	Amount of annual pay.	Former amount of annual pay.	Date of readjustment or adjustment.	Remarks.	Order.
d inches.		*Dolls.*	*Dolls.*	*Dolls.*	*Dolls.*			
6.11, f. f.,	18	163 90	184 50	4,008 99	4,428 00	July 1, 1877	0.46 m. increase	71
9, f. f., d. l.	21*	163 00	157 50	5,413 23	5,304 66	July 1, 1877	Formerly $96 for m. m. .47 m. decrease.	72
0, f. f., s. l.	31⅝*	162 90	130 50	10,415 82	8,319 37	July 1, 1877	0.19 m. increase	73
6, 1 l., 15 l l., 10 by all f. f.	64*	162 00	221 40	2,890 08	3,670 81	July 1, 1876	1.26 m. increase. In Sept., 1876.	74
15 by 7, f.	18	161 20	96 30	7,502 24	4,453 87	July 1, 1877	0.29 m. increase	75
9, f. f., d. l.	21*	161 10	97 20	8,538 30	5,151 60	Jan. 1, 1877	In Feb., 1877. Part; residue $45.90, (324.)	76
.....	21*	160 30	161 10	8,495 90	8,538 30	July 1, 1877	Part; residue $45. (353.)	77
) by 9, f. f.,	6	158 30	175 00	18,035 11	20,693 75	July 1, 1877	4.32 m. decrease	78
9, f. f., d. l.	21*	157 50	54 00	5,304 60	1,914 72	Jan. 1, 1877	$96 m. m. In Feb., 1877.	79
3, f f., d. l.	14	155 70	135 00	21,798 00	18,900 00	Feb. 1, 1877	In Feb., 1877	80
5, f. f., s. l.	18	152 10	166 75	3,251 89	3,543 75	July 1, 1877	0.38 m. increase	81
6.11, f. f.,	12	151 30	144 00	11,196 20	10,656 00	July 1, 1877	.....	82
. 10.2 by 6, l.	12	146 80	153 00	6,648 57	8,191 00	July 1, 1877	Formerly $1,000 m. m. 1.71 m. decrease.	83
6, 1 l., 15 1 l., 10 by to Manch ;, 30 m., 22 ;, 11, res.	20¼*	146 70	108 00	27,971 28	18,801 00	Oct. 1, 1876	In Sept., 1876. Formerly 55 m., at $103. 105 m., at $94.80. 1.17 m. increase.	84
8, f. f., s. l.	17¾*	146 70	45 00	8,215 20	2,520 00	Feb. 1, 1877	In Feb., 1877.....	85
15 by 7, f.	12	145 00	81 00	7,163 00	4,001 40	July 1, 1877	.....	86
7.10, f. f.,	15⅞*	144 00	88 20	56,095 20	34,358 31	Oct. 1, 1876	In Nov., 1876.....	87
1, f. f., d. l.	12	141 40	65 00	7,448 95	3,800 00	July 1, 1877	Formerly $420 m. m. 0.68 m. increase.	88
, f. f., s. l.	15*	139 50	138 00	19,809 00	19,596 00	July 1, 1877	Main route; branch $52.20. (273)	89
, f f., d. l.	14½*	136 00	117 90	11,886 40	9,555 30	July 1, 1877	Formerly 19 m., at $126.90; 14.40 m., at $54.	90
6.10, f. f.,	18⅝*	135 90	136 80	25,811 48	25,982 42	July 1, 1877	Main route; branches $76.50, $70.20, (154. 177.)	91
2.2 by 6.7, l.	18	133 30	163 00	3,607 09	4,564 00	July 1, 1877	0.94 m. decrease	92
3.11¾, f. f.,	7	132 30	81 00	35,257 95	21,586 50	Apr. 1, 1877	In April, 1877	93
1, 10.2 by f., d. l., ; no r. a. e.	36¼*	130 50	150 00	4,863 73	5,590 50	July 1, 1877	Main route; branch $45, (372.) .73 m. decrease.	93a
.5, f. f., d. l	18	127 90	144 00	10,976 37	12,309 12	July 1, 1877	Main route; branch $58.60, (223.) 0.34 m increase.	94
, f. f., s. l.	18	126 00	160 00	8,145 90	10,240 00	July 1, 1877	0.65 m. increase.....	95
f. f., s. l...	12	124 20	135 00	1,887 84	2,025 00	July 1, 1877	0.2 m. increase.....	96
.6, f. f., d. l	12	121 60	100 80	4,369 08	3,621 75	July 1, 1877	.....	97
.8, f. f., s. l	19	121 50	90 00	16,110 90	11,943 90	July 1, 1877	0.11 m. decrease	98
8.10¼, f. f.,	7	121 50	112 50	18,401 17	17,038 12	Oct. 16, 1876	Pay on 47 m. fixed from June 30, 1874, at $125, and from July 1 to Oct. 15, 1876, at $112.50 per m. In Oct., 1876.	99

F.—*Table showing the readjustment of the rates of pay per mile on railroad-routes*

Order.	State.	Number of route.	New number of route.	Termini.	Corporate title of company carrying the mails.	Length of route.	Average weight of mails whole distance per day.	Miles per hour.
						Miles.	*Pounds.*	
100	Mass	638	3042	Yarmouth Port, Provincetown.	Old Colony	44.56	1,393	25
101	Pa	8075	8073	Allentown, Harrisburg.	Philadelphia and Reading	90	1,576	24
102	Ind	22025	22025	Indianapolis, Terre Haute.	Indianapolis and Saint Louis	72	1,569	26½
103	N. Y.	1219	.....	New York, Chatham Village.	New York and Harlem	130.5	1,078	25
104	Colo	38001	38001	Denver, El Moro	Denver and Rio Grande	209.2	1,258	20
105	Pa	8075	.....	Allentown, Harrisburg	Philadelphia and Reading	90	1,479	25
106	Pa	8002	8002	Philadelphia, Pottsville.	do	92.5	1,405	22
107	Mass	634	3039	South Braintree Junction, Newport.	Old Colony	61.16	1,391	25
108	Mich	24007	24007	Detroit, Port Huron	Grand Trunk	64.5	1,345	22
109	N. J	7018	7018	Philadelphia, Bridgeton.	West Jersey	38.40	1,298	25
110	Ga	15012	15012	Macon, Atlanta	Central Railroad and Banking Company.	103.52	1,270	23
111	R. I	801	4001	Providence, Worcester	Providence and Worcester	44.17	1,022	30
112	Colo	38001	38001	Denver, El Moro	Denver and Rio Grande	209.2	1,258	20
113	Pa	8045	8044	Miles Grove, New Castle.	Erie and Pittsburgh	83.6	1,248	25
114	Conn	908	5011	Bridgeport, Winsted	Naugatuck	62.28	1,235	23
115	N. Y.	1255	6063	Canandaigua, Elmira	Northern Central	68.50	1,231	25
116	Pa	8019	8019	Binghamton, New Hampton.	Delaware, Lackawanna and Western.	144.50	1,217	25
117	N. Y.	1823	6033	West Chazy, Rouse's Point.	Delaware and Hudson Canal Company.	15.29	1,205	30
118	Conn	909	5012	Bridgeport, Pittsfield	Housatonic	110.55	976	27
119	N. Y.	1229	6041	Utica, Norwich	Delaware, Lackawanna and Western.	54.50	960	24
120	Pa	8021	8021	Williamsport, Elmira	Northern Central	79.17	1,197	23
121	Pa	8064	8064	Pittsburgh, Cumberland.	Pittsburgh and Connellsville	147.8	1,187	30
122	Mass	641	3051	Taunton, Mansfield Junction.	Boston, Clinton, Fitchburg and New Bedford.	11.92	1,168	30
123	Kans	33008	33008	Kansas City, Ottawa	Leavenworth, Lawrence and Galveston.	33.3	1,157	20
124	Ind	22017	22018	Indianapolis, Peoria	Indianapolis, Bloomington and Western.	212.2	1,150	28
125	Me	5	6	Brunswick, Bath	Maine Central	9.05	1,101	25

s in which the contract-term expired June 30, 1877, &c.—Continued.

, of mail- r apart-	Trips per week.	Pay per mile per annum.	Former pay per mile per annum.	Amount of annual pay.	Former amount of annual pay.	Date of readjustment or adjustment.	Remarks.	Order.
d inches.		*Dolls.*	*Dolls.*	*Dolls.*	*Dolls.*			
, 10.2 by 6, l.	12	117 10	118 00	5,217 97	9,319 44	July 1, 1877	Formerly $4,000 m. m. .52 m. decrease.	100
3.7, f. f., d. Emans, 6 l. residue; onal r. a. en Read- d Sinking ; 6 m.	28½*	116 53	110 70	10,487 70	9,963 00	July 1, 1877	.....	101
, f. f., a. l.	12	115 20	196 00	8,294 40	14,112 00	July 1, 1876	In Sept., 1876	102
8.3, 13.5 by f., d. l.; 66 l., residue	11⅔	113 00	100 00	14,601 50	13,550 00	June 15, 1876	$500 m. m. 64.5 m., at $103. In June, 1876. Pay from July 1 1876, reduced 10 per cent.	103
5, f. f., a. l.	7	112 00	.....	.....	.....	May 11, 1876	Extension Pueblo to El Moro, 90 2 m. In Mar., 1877. Pay 10 per cent. less from July 1, 1876.	104
.7, f. f., a. l.	26*	110 70	232 00	9,963 00	20,880 00	July 1, 1876	In Sept., 1876	105
8.7, f. f, a. uburn, 83 l. residue	17⅔*	109 02	112 50	10,084 35	19,406 25	July 1, 1877	.....	106
, 14 by 8.4, y 6.6, 10.2 , (average y 7.6,) f. f., 2.82 m.; no , residue, m.	13½*	107 10	126 00	6,550 23	8,710 50	July 1, 1877	Formerly $930 per annum per m. m. service. .59 m. decrease	107
7.5, f. f. c.,	18	105 30	90 00	6,791 85	5,805 00	Aug. 21, 1876	In Aug., 1876	108
3, f. f., a. l	12	102 60	99 00	3,939 84	4,401 60	July 1, 1877	Formerly $600 for side-service.	109
.7, f. f., a. l.	13	101 70	87 30	10,527 98	9,037 29	July 1, 1876	69 days; 9 from Mar. 15, and 30 from May 15, 1876, and 30 from Jan. 1, 1877.	110
e 13.2 by f., d. l.	24*	100 90	110 00	4,456 75	6,340 00	July 1, 1877	Formerly $1,500 for m m. .17 m. increase.	111
5, f. f., a. l	7	100 80	70 00	21,087 36	19,672 86	Mar. 1, 1877	Main route. In Mar., 1877.	112
f. f., a. l..	12	100 80	117 00	8,426 88	9,711 00	July 1, 1877	0.06 m. increase	113
⅛, 15.10 by f., a. l.	12	99 90	106 20	6,231 77	6,584 40	July 1, 1877	Main route; branch $45. Formerly $150 for m. m. .28 m. increase.	114
.6, f. f, a. l.	18	99 90	108 90	6,843 15	7,459 65	July 1, 1877	.....	115
f. f., a. l..	12	99 00	76 50	14,305 50	11,054 42	July 1, 1877	.....	116
6.10, f. f.,	12	99 00	.....	.....	.....	Nov. 20, 1876	New	117
5, f. f., d. l	12	98 20	86 40	10,856 01	9,549 79	July 1, 1877	Main route; branches $45, (364.)	118
7, f. f., d. l	12	98 20	80 00	5,351 90	4,360 00	July 1, 1877	.....	119
3.6, f. f., a. l	18	98 10	160 00	7,766 57	12,480 00	July 1, 1877	1.17 m. increase.....	120
3.6, f. f., a. l	16¾*	98 10	76 50	14,499 18	11,306 70	Oct. 1, 1876	In Oct., 1876. Main route; branch $52.20, (270.)	121
.....	30	97 20	112 50	1,158 62	1,950 00	July 1, 1877	Formerly $600 m. m. .08 m. decrease.	122
f. f., a. l...	6	96 30	75 60	3,206 79	2,517 48	Apr. 1, 1877	In April, 1877	123
f. f., a. l...	18	96 30	135 00	20,434 86	28,647 00	July 1, 1876	In Oct., 1876.....	124
6.7½, f. f.,	18	94 50	120 00	855 22	1,080 00	July 1, 1877	0.05 m. increase. Branch; main route $278 60, $268.70, (37, 38.)	125

F.—*Table showing the readjustment of the rates of pay per mile on railroad-routes*

Order.	State.	Number of route.	New number of route.	Termini.	Corporate title of company carrying the mail.	Length of route.	Average weight of mails whole distance per day.	Miles per hour.
						Miles.	*Pounds.*	
126	Me ...	13	15	Bath, Rockland	Knox and Lincoln	49.86	843	18
127	N. Y..	1207	6007	Attica, Corning	Erie	111	1,048	30
128	Tenn .	19002	19002	Cleveland, Dalton	East Tennessee, Virginia and Georgia.	28.5	1,031	25
129	Vt ...	528	2012	Wells River, Montpelier.	Montpelier and Wells River ..	38.78	1,028	21
130	Kans	33005	33005	Kansas City, Baxter Springs.	Missouri River, Fort Scott and Gulf.	160.2	1,529	20
131	N. Y..	1256	6064	Syracuse, Oswego	Oswego and Syracuse	35.5	1,015	25
132	N. H..	371	1012	Nashua, Rochester ...	Worcester and Nashua	49.40	761	25
133	Pa	8017	8017	Scranton, Northumberland.	Lackawanna and Bloomsburg.	80	986	25
134	Vacant	.....	.....	.....	.....	.....	.....	.....
135	N. Y..	1245	6028	Albany, Binghamton	Delaware and Hudson Canal..	142	933	24
136	N. Y..	1233	6045	Long Island City, Greenport.	Long Island	94.31	927	25
137	Me ...	6	7	Portland, Canada Line	Grand Trunk	166.31	927	20
138	Me ...	244	13	Bangor, Bucksport ...	Consolidated European and North American.	19.89	660	22
139	Ohio ..	21034	21034	Salamanca, Dayton ..	Atlantic and Great Western..	389.55	88	28
140	N. Y..	1257	6065	Syracuse, Binghamton	Syracuse, Binghamton and New York.	80	883	24
141	Pa	8008	8008	Lamokin, Port Deposit	Philadelphia and Baltimore Central.	59.25	861	25
142	Ohio ..	21005	21005	Cleveland, Sharpsville	Atlantic and Great Western..	24.40	858	25
143	Pa	8022	8022	Williamsport, Erie ...	Pennsylvania	248.08	839	22
144	Conn .	916	5018	Hartford, Millerton ..	Connecticut and Western.....	69.93	599	20
145	Conn .	911	5007	Waterbury, Providence.	Hartford, Providence and Fishkill.	122.94	818	22
146	Me ..	34	3	Farmington, Brunswick.	Maine Central	69.50	810	20
147	N. Y..	1228	6040	Chenango Forks, Norwich.	Delaware, Lackawanna and Western.	30.69	564	24
148	N. J...	7008	7008	Trenton, intersection Delaware, Lackawanna and Western Railroad.	Pennsylvania	68.7	777	25
149	N. Y .	1276	6084	Sayre, Fair Haven.	Southern Central	121	771	25
150	Mass..	642	3052	Taunton, New Bedford.	Boston, Clinton, Fitchburg and New Bedford.	21.90	754	30
151	Ohio ..	21001	21001	Newark, Columbus...	Central Ohio	33	748	25
152	Mass..	656	3048	Mansfield, South Framingham.	Boston, Clinton, Fitchburg and New Bedford.	22.02	507	28
153	Mass..	631	3046	South Framingham, Pratt's Junction.	.....do	29.74	727	30
154	N. Y..	1224	6026	Albany Junction, Troy.	Delaware and Hudson Canal Company.	6	719	24
155	N. Y..	1273	6081	Fonda, Gloversville ..	Fonda, Johnstown and Gloversville.	10	717	20

les in which the contract-term expired June 30, 1877, *&c.*—Continued.

c., of mail- or apart-	Trips per week.	Pay per mile per annum.	Former pay per mile per annum.	Amount of annual pay.	Former amount of annual pay.	Date of readjustment or adjustment.	Remarks.	Order.
and inches.		*Dolls.*	*Dolls.*	*Dolls.*	*Dolls.*			
7.2, 13 by f, d. l.	12	92 80	100 00	4, 627 00	6, 000 00	July 1, 1877	Formerly $1,000 for ferriage. 0.14 m. decrease.	126
.2, f. f., a. l.	31⅝*	91 80	247 50	10, 189 80	27, 472 50	July 1, 1877	.....	127
.4, f. f., a. l. report.)	14	90 90	135 00	2, 590 65	3, 847 50	Apr. 1, 1877	Branch; main route $170.80, (67.) In Apr 1877.	128
.10, f. f., a. l.	6	90 90	63 00	3, 525 10	2, 433 06	July 1, 1877	0 16 m. increase . ..	129
, f. f., a. l ..	7¾*	90 72	69 12	14, 533 34	11, 073 02	Apr. 1, 1877	In April, 1877	130
, f. f., a. l ..	18	90 00	100 00	3, 195 00	3, 550 00	July 1, 1877	.....	131
, d. l	12	90 00	.....	.....	.....	Jan. 20, 1875	In Aug., 1876. New pay from July 1 1876, reduced to ten per cent.	132
, f. f., a. l ..	21½*	89 10	81 00	7, 128 00	6, 480 00	July 1, 1877	.....	133
.....	.....	.....	.....	.....	.....	.....	.....	134
3.8¼ f. f., a. l	18	86 40	90 90	12, 268 80	12, 907 80	July 1, 1877	.....	135
, f. f., a. l ..	12	86 40	81 00	8, 148 38	7, 938 00	July 1, 1877	Main route; branch $45, (362.) 3.69 m decrease.	136
8, f. f., a. l	9¼*	86 40	138 00	14, 369 18	22, 770 00	July 1, 1877	1.31 m. decrease	137
8.3, f. f., d. l	12	84 70	80 10	1, 624 68	1, 549 93	July 1, 1877	0.54 m. increase.....	138
7.10, f. f. c.,	15*	84 60	144 00	32, 955 93	56, 095 20	Jan. 1, 1877	60 days in Feb. and Mar., 1877.	139
3, fixtures,	12	84 60	90 00	6, 768 00	7, 200 00	July 1, 1877	.....	140
, 10 by 6.6, l. l.	12	83 70	73 80	4, 959 22	4, 372 62	July 1, 1877	.....	141
7.10, f. f. c ,	10½*	82 80	180 00	6, 988 32	11, 106 70	Jan 1, 1877	Formerly 34.65 m., at $62 10. 60 days in Feb. and Mar., 1877.	142
,8.10 by5.7, by 8.8, a. l.	13¼*	81 90	102 60	20, 317 75	25, 453 00	July 1, 1877	Part; residue $189.70, (61.)	143
furniture,	15*	81 10	50 00	3, 671 32	4, 150 80	July 1, 1877	0.75 m. increase	144
6.6, f. f., a. l	16¼*	81 00	72 00	9, 958 14	8, 820 00	July 1, 1877	0.44 m. increase.....	145
1.7., a. l to s Junction, miles. In ge of con- or thence uth Lewis- 12 m. t. l; aton to swick, 18.5	9½*	81 00	67 50	5, 814 50	4, 876 25	July 1, 1877	18.5 m., at $91 per m Formerly $50 per annum for m. m. 2 m. decrease.	146
7, f. f., d. l.	12	80 20	60 00	2, 461 33	1, 841 40	July 1, 1877	.....	147
), f. f., a. l..	13¼*	79 20	72 00	5, 441 04	4, 946 40	July 1, 1877	.....	148
4, f. f., a. l.	12½*	79 20	54 00	9, 583 20	7, 788 00	July 1, 1877	Formerly $1,200 per annum for side service. 1 m. decrease.	149
.....	36	78 30	119 70	1, 714 77	3, 066 33	July 1, 1877	Formerly $612.50 for m. m. 1.39 m. increase.	150
no r. a ..	18¼*	78 30	85 50	2, 583 90	2, 821 50	Oct. 1, 1876	Part; residue $220 90, (54.) In Oct., 1876.	151
), 12 by 6.9 . l.	13⅝*	77 50	54 00	1, 706 55	1, 188 00	July 1, 1877	.02 m. increase.....	152
9, f. f., a. l	20*	77 40	81 00	2, 301 87	2, 349 00	July 1, 1877	0.74 m. increase.....	153
no r. a ...	18	76 50	67 50	459 00	405 00	July 1, 1877	Branch; main route $135.90, (91.)	154
f. f., a. l ...	15*	76 50	64 00	765 00	1, 390 00	July 1, 1877	Formerly $750 per annum side service	155

F.—*Table showing the readjustment of the rates of pay per mile on railroad-routes*

Order.	State.	Number of route.	New number of route.	Termini.	Corporate title of company carrying the mail.	Length of route.	Average weight of mails whole distance per day.	Miles per hour.
						Miles.	*Pounds.*	
156	Pa....	8064	8063	Pittsburg, Cumberland	Pittsburg and Connellsville...	150.10	705	25
157	Me ...	2	5	Portland, Waterville	Maine Central	72.53	694	25
158	N. Y..	1221	6024	Eagle Bridge, Rutland	Delaware and Hudson Canal Company.	62.50	682	25
159	Cal ...	46018	46018	San Fernando, San Bernardino.	Southern Pacific	81.12	534	15
160	Mo....	28018	.....	Hannibal, Louisiana..	Saint Louis, Keokuk and Northwestern.	26.08	530	20
161	N. Y..	1205	6005	Rochester, Avon	Erie	18	668	30
162	Conn..	991	5016	Hartford, Springfield.	Connecticut Valley and Springfield.	31.10	478	30
163	Conn..	902	5009	New London, Palmer.	Central Vermont	65.27	635	30
164	N. Y..	1230	6042	Owego, Ithaca.....	Delaware, Lackawanna and Western.	35	627	24
165	N. Y..	1813	6098	Gloversville, Northville.	Gloversville and Northville...	17¾	432	20
166	Del ...	9502	9502	Delmar, Crisfield....	Eastern Shore	38	613	16
167	Mass..	644	3047	Sterling Junction, Fitchburg.	Boston, Clinton, Fitchburg and New Bedford.	14.15	610	25
168	Pa....	.....	8016	Penn Haven Junction, Tombicken.	Lehigh Valley	24.7	608	25
169	N. Y..	1283	6087	Utica, Watertown ...	Utica and Black River.....	92.22	606	23
170	Mass..	659	3049	Framingham, Lowell	Boston, Clinton, Fitchburg and New Bedford.	29.44	600	23
171	N. J..	7019	7019	Glassborough, Millville	West Jersey.....	22	598	25
172	N. J ..	7005	7005	Philadelphia, Monmouth Junction.	Pennsylvania.....	54.56	593	35
173	Ga....	15010	15010	Savannah, Macon.....	Central Railroad and Banking Company.	192½	591	22
174	Pa....	8003	8003	Philadelphia, Westchester.	Westchester and Philadelphia	26.35	588	18
175	Mass	647	3061	Palmer, Miller's Falls	Central Vermont	34.95	585	30
176	Pa....	8056	8055	Pittsburgh, Washington.	Pittsburgh, Cincinnati and Saint Louis.	23.71	566	17
177	N. Y..	1224	6026	Whitehall, Castleton.	Delaware and Hudson Canal Company.	16	563	25
178	Pa....	8104	8102	Hanover Junction, Hanover.	Hanover Branch	13.37	399	20
179	Pa....	8040	8039	Blairsville, Allegheny.	Pennsylvania	64.6	555	18
180	Mo ...	28028	28028	Pierce City, Oswego..	Missouri and Western	73.6	546	20
181	Ga....	15011	15011	Macon, Columbus	Southwestern	100.94	544	20½
182	N. Y..	1225	6034	Oswego, Richland ..	Rome, Watertown and Ogdensburg.	26.5	538	30
183	Va .	11011	11011	Petersbugh, Norfolk	Atlantic, Mississippi and Ohio	81.5	538	30
184	N. Y..	1249	6058	Buffalo, Emporium...	Buffalo, New York and Philadelphia.	123.51	533	25

ıtes in which the contract-term expired June 30, 1877, ʃc.—Continued.

&c., of mail- or apart- ıt.	Trips per week.	Pay per mile per annum.	Former pay per mile per annum.	Amount of annual pay.	Former amount of annual pay.	Date of readjustment or adjustment.	Remarks.	Order.
and inches.		*Dolls.*	*Dolls.*	*Dolls.*	*Dolls.*			
y 8.6, f. f., ɛ. l	18	76 50	96 10	11,482 65	14,499 18	July 1, 1877	Main route; branches $54, $45, (257.) 2.30 m. increase.	156
6.10½, f. f., s l	10½*	75 60	175 00	5,483 26	12,824 00	July 1, 1877	.18 m. decrease on whole route. Part; residue $231.80, (48.)	157
y 6.7, f. f., a. l	6	75 60	137 70	4,725 00	8,709 75	July 1, 1877	11.5 m. formerly at $146.70 per m.	158
ı.....	6	75 00	.....	.....	.....	Nov. 16, 1875	New. In Sept., 1876. Pay from July 1, '76, reduced 28 per cent.	159
y 9, a. l.....	12	75 00	.....	.....	.....	June 16, 1876	Extension; residue of route under contract. Pay on extension from July 1, 1876, reduced ten per cent.	160
y 10.2 f. f., a. l	22*	74 70	72 00	1,344 60	1,296 00	July 1, 1877	.....	161
y 6.9, f. f., a. l	6	73 00	.....	.....	.....	June 1, 1876	New	162
6.4, f. f., a. l	21*	72 90	108 00	4,758 18	7,020 00	July 1, 1877	.27 m. increase.....	163
7.6, f. f., a. l.	12	72 90	80 00	2,551 50	2,800 00	July 1, 1877	.....	164
, f. f., d. l....	12	72 10	68 40	1,252 73	1,288 45	July 1, 1877	Formerly $100 per annum for m. m. at Mayfield.	165
8, f. f., a. l...	6	72 00	58 50	2,736 00	2,223 00	July 1, 1877	.....	166
6.9, f. f., a. l. ; no r. a. rec.	29½*	72 00	81 00	1,018 80	1,134 00	July 1, 1877	.15 m. increase.....	167
6.6, f. f., d. l. [azelton, 15.9 a. l. rec.	14¾*	72 00	76 50	1,778 40	1,889 55	Oct. 1, 1876	Main route; branches $45, $45, (361, 377.) Formerly 8 m. at $75 In Sept., 1876.	168
6.10, f. f., a. l	12	72 00	58 50	6,639 84	5,394 87	July 1, 1877	.....	169
6.9, f. f., a. l.	12	72 00	55 80	2,119 68	1,618 20	July 1, 1877	.44 m. increase.....	170
8.3, f. f., a. l.	12	71 10	76 50	1,564 20	1,683 00	July 1, 1877	.....	171
.6, f. f., a. l., ; 12 inward utward be- en James- ɛ and Mon- th Junction miles.	20¼*	71 10	81 00	3,879 21	4,338 36	July 1, 1877	Main route; branches $40.50, $48.60, (391, 303.) 1 m. increase.	172
7, f. f., a. l..	14	71 10	69 30	13,660 08	13,314 26	July 1, 1876	68 days, 8 from Mar. 15, 30 from May 15, 1876, and 30 from Jan. 1, 1877.	173
f. f., d. l....	24*	71 10	67 50	1,873 48	1,866 50	July 1, 1877	0.22 m. increase. Formerly $102.75 per annum side service.	174
6.5, f. f., a. l.	12	71 10	90 00	2,484 94	3,150 00	July 1, 1877	0.05 m. decrease.....	175
8.10½, f. f., a. l	12	70 20	58 50	1,664 44	1,333 80	July 1, 1877	0.91 m. increase....	176
ı.; no r. a....	12	70 20	90 00	1,123 20	1,440 00	July 1, 1877	Branch; main route $135.90, (91.)	177
y 6, f. f., d. l.	12	69 40	45 00	927 87	585 00	July 1, 1877	0.37 m. increase.....	178
3.6, fixtures,	6	69 30	58 50	4,476 78	3,726 45	July 1, 1877	0.90 m. increase.....	179
6.10, f. f., a. l	6	69 30	45 00	5,111 56	2,596 95	Apr. 1, 1877	In May, 1877. 10.83 m. extension at $15 per m. from Jan. 16 to Mar. 31, 1877.	180
6.3, f. f., a. l	7	69 30	67 50	6,995 14	6,813 45	July 1, 1876	75 days, 15 from Mar 15 and 30 from May 15, 1876, and 30 from Jan. 1, 1877.	181
7, f. f., a. l...	6	68 40	65 00	1,949 40	1,852 50	July 1, 1877	.....	182
8.7, f. f., a. l	6	68 40	54 00	5,574 60	4,479 60	July 1, 1877	0.5 m. increase	183
6, f. f., a. l.	6	68 40	60 00	8,448 08	7,410 60	July 1, 1877	.....	184

F.—*Table showing the readjustment of the rates of pay per mile on railroad-routes*

Order.	State.	Number of route.	New number of route.	Terminl.	Corporate title of company carrying the mail.	Length of route.	Average weight of mails whole distance per day.	Miles per hour.
						Miles.	*Pounds*	
185	N. Y..	1813	6098	Gloversville, Northville.	Gloversville and Northville...	17¾	521	20
186	Ind...	12008	22008	New Albany, Michigan City.	Louisville, New Albany and Chicago.	288	424	20
187	N. Y..	1290	6091	Buffalo, Jamestown..	Buffalo and Jamestown.....	71.09	369	30
188	Conn.	914	5015	Hartford, Saybrook Point.	Connecticut Valley.....	44.15	513	30
189	Ga....	15016	15016	Macon, Eufaula.....	Southwestern.....	144.84	510	18½
190	Md...	10017	10017	Saint Denis, Point of Rocks.	Baltimore and Ohio.....	60	505	19
191	Me...	11	4	Belfast, Burnham Village.	Maine Central.....	34.79	357	20
192	Ga....	15013	15013	Macon, Brunswick...	Macon and Brunswick.....	188	499	16
193	N. J..	7026	7026	New York, Pemberton Junction.	New Jersey Southern.....	84.6	491	35
194	W. Va.	12001	12001	Harper's Ferry, Harrisonburg.	Baltimore and Ohio.....	101.60	491	19
195	Ga....	15005	15005	Millen, Augusta.....	Central Railroad and Banking Company.	53½	488	18
196	Md...	10006	10006	Baltimore, Williamsport.	Western Maryland.....	91.62	483	18
197	Conn.	991	5016	Hartford, Springfield	Connecticut Central, (late Connecticut Valley and Springfield.)	31.67	478	30
198	Pa....	8034	8033	Hanover, Gettysburg	Hanover Branch.....	16.60	332	20
199	N. Y..	1258	6066	Rouse's Point, Canada Line.	Champlain and St. Lawrence	2.25	456	25
200	Kans.	33003	33003	Lawrence, Coffeyville.	Leavenworth, Lawrence and Galveston.	142.9	762	20
201	N. Y..	1234	6046	Hicksville, Port Jefferson.	Long Island.....	36.5	319	25
202	N. Y..	1252	6061	Brocton, Corry.....	Allegheny Valley.....	44.68	457	20
203	Pa...	8025	8025	Irvine, Corry.....	Pittsburgh, Titusville and Buffalo.	95	442	20
204	Md...	10007	10007	Annapolis, Annapolis Junction.	Annapolis and Elk Ridge.....	21.5	442	25
205	Pa....	8013	8013	Pottsville, Herndon..	Philadelphia and Reading....	81.10	301	19
206	N. Y..	1206	6006	Avon, Dansville.....	Erie.....	30.73	436	20
207	R. I..	803	4004	Providence, Bristol...	Providence, Warren and Bristol.	15.75	432	18
208	Ohio..	21005	21005	Leavittsburg, Sharpsville.	Atlantic and Great Western..	34.65	431	25
209	Pa....	8027	8027	Lancaster, Middleto'n	Pennsylvania.....	31.5	430	28
210	Pa....	8036	8035	Tyrone, Curwinsville.	Pennsylvania, (lessees).....	47.5	428	16
211	N. Y..	1287	6038	Oswego, Lewiston....	Rome, Watertown and Ogdensburg.	146.92	428	30

in States in which the contract-term expired June 30, 1877, *&c.*—Continued.

Size, &c., of mail-car or apartment.	Trips per week.	Pay per mile per annum.	Former pay per mile per annum.	Amount of annual pay.	Former amount of annual pay.	Date of readjustment or adjustment.	Remarks.	Order.
Feet and inches.		*Dolls.*	*Dolls.*	*Dolls.*	*Dolls.*			
8 by 6, s. l.	12	68 40	.....	.....	.....	July 1, 1876	$100 m. m. at Mayfield. New. In Jan., 1877.	185
11 by 7, f. f., s. l.	7*	68 00	60 00	19,584 00	17,280 00	July 1, 1873	.....	186
18 by 7, f. f., d. l.	12	67 60	63 00	4,805 68	4,478 67	July 1, 1877	.....	187
11.6 by 6.9½, 7.6 by 7, 10.6 by 6.9, (average, 9.10 by 6.10,) f. f., s. l.	12	67 50	54 00	2,980 12	2,330 64	July 1, 1877	0 99 m. increase	188
12.8 by 6.3, f. f., s. l	7	67 50	64 80	9,776 70	9,385 63	July 1, 1876	Main route; no adjustment on branches 75 days, 15 from Mar. 15, 30 from May 15, 1876, and 30 from Jan. 1, 1877.	189
16 by 8.6, f. f., s. l.	14½*	67 50	90 00	4,050 00	5,400 00	July 1, 1877	.....	190
15.11 by 7.1, f. f, d. l	12	66 70	54 00	2,320 49	1,846 20	July 1, 1877	0.60 m. increase	191
14 by 7, f. f., s. l.	6	66 60	60 30	12,520 80	11,336 40	July 1, 1876	Main route; 76 days. 16 from Mar. 15, 30 from May 15, 1876, and 30 from Jan. 1, 1877. 7 trips part of the year.	192
8 by 6, f. f., s. l.	8½*	66 60	60 30	5,634 36	5,101 38	July 1, 1877	Main route; branches $51.30, $45, (280, —.)	193
16 by 8.6, f. f., s. l.	7½*	66 60	74 70	6,766 56	7,505 11	July 1, 1877	1 13 m. increase. Part; residue $51.30, (281.)	194
8.2 by 7, f. f., s. l.	7	66 60	67 50	3,538 12	3,585 93	July 1, 1876	70 days, 10 from Mar. 15, 30 from May 15, 1876, and 30 from Jan. 1, 1877.	195
11 by 8.2, f. f., s. l.	12	65 70	67 50	6,019 45	6,184 35	July 1, 1877	.....	196
10.6 by 6.9, f. f., s. l	6	65 70	73 00	2,043 27	2,270 30	July 1, 1876	From July 1, 1877, 0.57 m. increase.	197
11.6 by 6, f. f., d. l.	12	64 90	54 00	1,077 34	945 00	July 1, 1877	0.90 m. decrease	198
In b. c.; no r. a.	13	63 90	116 66	143 77	262 50	July 1, 1877	.....	199
15 by 9, f. f., s. l.	6	63 36	56 88	9,054 14	8,128 15	Apr. 1, 1877	Main route; branch $50.40, (287.) In April, 1877.	200
10.3 by 8, f. f., d. l. to Northport, 16.50 m.; s. l. residue.	12	63 10	63 00	2,103 15	2,119 50	July 1, 1877	Formerly 20 m., at $54. 20 m., at $53.10.	201
11 by 6, fixtures, s. l	6	63 00	47 70	2,814 84	2,760 81	July 1, 1877	Formerly $600 m. m.; 0 62 m. decrease.	202
11 by 6, f. f., s. l.	12½*	63 00	60 30	5,985 00	5,728 50	July 1, 1877	.....	203
In b. c.; fixtures, s. l.	15*	63 00	57 50	1,354 50	1,383 75	July 1, 1877	1 m. increase	204
6.9 by 7.7, f. f., d. l. to Shamokin, 60 m., s. l., residue 21.10 m.	10⅔*	62 20	49 50	4,833 42	4,014 45	July 1, 1877	21.10 m., at $52.20 per m.	205
11 5 by 10.2, f. f., s. l	15*	62 10	60 00	1,908 33	1,843 80	July 1, 1877	.....	206
In b. c.; no r. a.	12	62 10	60 00	978 07	1,926 00	July 1, 1877	Formerly $1050 for m. m.; 1.15 m. increase.	207
14 4 by 7.10, f. f., s. l	18*	62 10	61 20	2,151 76	2,120 58	Oct. 1, 1876	Part; residue $180 (64.) In Nov., 1876.	208
In b. c.; no r. a.	16½*	62 10	63 00	1,956 15	1,965 60	July 1, 1877	0.3 m. increase	209
10.8 by 8.1, f. f., s. l	12	62 10	58 50	2,949 75	2,375 00	July 1, 1877	0 4 m. increase. Pay on 6.5 m. fixed from Sept. 1, 1875.	210
23 by 7, f. f., s. l.	6	62 10	56 00	9,123 73	3,899 84	July 1, 1877	$62.10 per m. for 77.25 m. extension, in addition to former annual pay from Aug. 10, 1876.	211

F.—*Table showing the readjustment of the rates of pay per mile on railroad-routes*

Order.	State.	Number of route.	New number of route.	Termini.	Corporate title of company carrying the mail.	Length of route.	Average weight of mails whole distance per day.	Miles per hour.
						Miles.	*Pounds.*	
212	N. J ..	7003	7003	Elizabethport, (n. o.,) Sea Plain.	Central, of New Jersey	47. 90	426	20
213	N. Y..	1288	6088	Carthage, Morristown	Utica and Black River.....	50. 08	423	20
214	Cal ...	46005	46005	Sacramento, Folsom City.	Sacramento Valley	23. 2	421	20
215	Me ...	1	1	Waterville, Skowhegan.	Maine Central	18. 78	418	25
216	Ark ..	29006	29006	Malvern, Hot Springs	Hot Springs	25. 11	337	17
217	N. Y..	1815	6032	Fort Edward, Glen's Falls.	Delaware and Hudson Canal Company.	6. 92	335	20
218	N. Y..	1267	6037	Syracuse, Lacona	Rome, Watertown and Odgensburg.	44. 92	415	30
219	Me ...	10	14	Oldtown, Blanchard..	Bangor and Piscataquis	63. 80	408	21
220	Mass .	650	3029	Pittsfield, North Adams.	Boston and Albany	20. 44	407	25
221	Pa....	8039	8038	Milesburg, Bellefonte.	Pennsylvania	2. 9	261	10
222	Mass .	636	3064	Braintree Depot, Cohasset.	Old Colony, (late South Shore)	11. 61	395	20
223	Conn .	906	5010	Plainville, New Hartford.	New Haven and Northampton.	14. 32	258	30
224	N. Y..	1243	6057	Utica, Smith's Valley	Utica, Clinton and Binghamton	31. 40	250	20
225	N. H .	255	1002	Concord, Portsmouth.	Concord	59. 16	390	25
226	Pa....	8043	8042	Branch Junc., Indiana	Pennsylvania	19	386	17
227	Mass .	658	3068	Springfield, Athol....	Springfield, Athol and Northeastern.	48. 27	325	23
228	Ind ...	22022	22022	Goshen, Anderson....	Cincinnati, Wabash and Michigan.	114. 32	383	15
229	Pa....	8018	8018	Scranton, Carbondale	Delaware and Hudson Canal Company.	17. 60	382	20
230	Ohio ..	21010	21010	Sandusky, Chicago ...	Baltimore and Ohio, (lessees Sandusky, Mansfield and Newark.)	28	380	27
231	N. Y..	1226	6035	Watertown, Cape Vincent.	Rome, Watertown and Ogdensburg.	26	377	30
232	Pa....	8035	8034	Huntingdon, Mount Dallas.	Huntingdon and Broad Top...	45. 14	376	20
233	Pa....	8044	8043	Meadville, Oil City...	Atlantic and Great Western..	36. 63	374	25
234	Mass .	649	3056	South Vernon Junction, Keene.	Connecticut River	24. 19	370	25
235	Va....	11004	11004	Alexandria, Round Hill.	Washington and Ohio.....	52. 74	368	23
236	N. Y..	1209	6009	Goshen, Montgomery.	Erie	10. 25	362	27
237	Pa....	8074	8072	Mount Dallas Station, New Bridgeport.	Pennsylvania	·31	359	20
238	Pa....	8083	8081	Pittsburgh, Monongahela City.	Pittsburgh, Virginia and Charleston.	31. 04	335	25
239	N. Y..	1201	6004	Newburg, Chester ..	Erie	19. 75	354	28
240	Conn .	915	5017	New Haven, Ansonia	New Haven and Derby	13. 42	350	22
241	Pa..	8039	8038	Tyrone, Lock Haven	Pennsylvania	55. 1	348	20
242	Del...	9503	9503	Clayton, Easton	Delaware and Maryland	44	347	20
243	N. Y..	1269	6074	Ithaca, Cortland Village.	Utica, Ithaca and Elmira	23	345	24
244	Va ..	11012	11012	Petersburg, Lynchburg.	Atlantic, Mississippi and Ohio	123. 25	344	26
245	Cal ...	46020	46020	Colfax, Nevada City .	Nevada County Narrow Gauge	22. 81	267	12½
246	Ohio ..	9055	21051	Columbus, Chillicothe	Sciota Valley	51. 76	266	20

in States in which the contract-term expired June 30, 1877, *&c.*—Continued.

Size, &c., of mail-car or apartment.	Trips per week.	Pay per mile per annum.	Former pay per mile per annum.	Amount of annual pay.	Former amount of annual pay.	Date of readjustment or adjustment.	Remarks.	Order.
Feet and inches.		*Dolls.*	*Dolls.*	*Dolls.*	*Dolls.*			
13 by 7, f. f., s. l...	6	62 10	61 20	2,974 59	2,931 48	July 1, 1877	.....	212
13 by 6.6, f. f., s. l.	12	61 20	67 50	3,064 89	2,901 20	July 1, 1877	Main route; branch $45; 29.58 miles, formerly at $51.30.	213
no r. a	12	61 20	56 25	1,419 84	1,305 00	Nov. 1, 1876	In Nov., 1876	214
15.11 by 7.1, f. f., s.l	12	61 20	90 00	1,149 33	1,530 00	July 1, 1877	Part; residue $238.10, (46.)	215
7 6 by 2.6, s. l	7	61 00	.....	.....	.....	Feb. 15, 1876	New. In Mar., 1877. Pay from July 1, 1876, reduced 10 per cent.	216
in b. c.; no r. a ...	12	61 00	.....	.....	.....	May 1, 1876	In Jan., 1877. New.	217
6.7 by 7, f. f., s. l ..	6	60 30	49 50	2,708 67	2,223 54	July 1, 1877	.....	218
14 by 9, f. f., s. l ..	6	60 30	49 50	3,847 14	2,682 90	July 1, 1877	$60.30 per mile for 9.6 m. extension from May 1, 1877.	219
in b. c.; no r. a...	24	60 30	54 00	1,232 53	1,449 00	July 1, 1877	Formerly $315 for m. m.; .56 m. decrease.	220
10.8 by 8.1, f. f., d. l	18	59 50	54 00	172 55	145 80	July 1, 1877	Branch; main route $55.80, (241.) .2 m. increase.	221
in b. c.; no r. a...	12	59 40	58 00	689 63	1,400 00	July 1, 1877	Formerly $704 for m. m. .39 m. decrease.	222
15.5 by 6.5, f. f., d. l	18	58 60	45 00	839 15	745 20	July 1, 1887	Branch; main route $127.90, (94.) 2.24 m. decrease.	223
15.6 by 7, f. f., d. l.	12	58 60	45 00	1,840 04	1,413 00	July 1, 1877	.....	224
14.6 by 6.10, f.f., s.l	12	58 50	60 00	3,460 86	3,600 00	July 1, 1877	0.84 m. decrease	225
in b. c.; no r. a...	9*	58 50	54 00	1,111 50	1,026 00	July 1, 1877	.....	226
12 by 7, f. f, s. l...	6	58 50	57 00	2,823 79	2,998 86	July 1, 1877	Formerly $150 for m. m. 1.71 m. decrease.	227
10.8 by 6.4, fixtures, s. l.	6	58 50	45 00	6,687 72	5,144 40	Oct. 1, 1876	In Dec., 1876	228
6.6 by 6, f. f., d. l..	12	58 50	45 00	1,029 60	1,114 45	July 1, 1877	0.49 m. increase. Formerly $344.50 for m. m.	229
20 by 8, f. f, s. l...	18*	58 50	67 50	1,638 00	1,890 00	Oct. 1, 1876	Part; residue $230.80, (49.) In Nov., 1876.	230
in b. c.; no r. a...	12	57 60	62 50	1,497 60	1,625 00	July 1, 1877	.....	231
8.10 by 6.9, fixtures, s. l.	12	57 60	54 00	2,600 06	2,376 00	July 1, 1877	Main route; branch $45, (373.) 1.14 m. increase.	232
14.4 by 7.10, f.f., s l	12	57 60	56 25	2,109 88	2,039 06	July 1, 1877	0.38 m. increase	233
17.8½ by 6.11, f.f., s.l	12	57 60	62 50	1,393 34	1,500 00	July 1, 1877	0.19 m. increase	234
12 by 6, f. f., s. l...	12	57 60	53 00	3,037 82	2,515 70	July 1, 1877	.....	235
18.7 by 7.2, f. f., s. l	9*	56 70	50 00	581 17	512 50	July 1, 1877	.....	236
in b. c.; f. f., s. l ..	12	56 70	45 00	1,757 70	1,440 00	July 1, 1877	1 m. decrease.....	237
10 by 8, f. f., s. l...	12	55 80	60 30	1,732 03	1,919 95	July 1, 1877	0.80 m. decrease	238
no apt.; no r. a...	19½*	55 80	65 00	1,102 05	1,283 75	July 1, 1877	Main route; branch $50.40, (291.)	239
no apt.; no r. a ..	18	55 80	55 00	748 83	742 50	July 1, 1877	0.08 m. decrease.....	240
10.8 by 8.1, f. f., s. l	12	55 80	56 25	3,074 58	3,099 37	July 1, 1877	Main route; branch $59.50, (221.)	241
10 by 6.6, f. f., s. l	6	55 80	54 00	2,455 20	2,376 00	July 1, 1877	.....	242
15 by 9, fixtures; no r. a.	6	55 80	58 50	1,283 40	1,345 50	July 1, 1877	.....	243
18.2 by 8.7, f. f., s.l.	6	55 80	58 50	6,877 35	7,239 38	July 1, 1877	0.25 m. increase	244
no r. a.....	14	55 00	.....	.....	.....	May 1, 1876	New; in Jan., 1877. Pay from July 1, '76, reduced 10 per cent.	245
9.4 by 6.9, f. f, s. l.	12	55 00	.....	.....	.....	May 1, 1876	New; pay from July. 1, 1876, reduced 10 per cent. Pay on 20.56 m. fixed from July 3, 1876.	246

F.—*Table showing the readjustment of the rates of pay per mile on railroad-routes*

Order.	State.	Number of route.	New number of route.	Termini.	Corporate title of company carrying the mail.	Length of route.	Average weight of mails whole distance per day.	Miles per hour.
						Miles.	*Pounds.*	
247	Md ...	10005	10005	Weverton, Hagerstown.	Baltimore and Ohio	24.53	152	23½
248	Mass .	661	3069	Holyoke, Westfield...	New Haven and Northampton.	10.53	106	30
249	Md ...	10004	10004	Araby, Frederick	Baltimore and Ohio	3.75	338	20
250	Mass .	653	3044	South Braintree Junction, Fall River.	Old Colony.....	34.36	336	25
251	N. Y..	1815	6032	Fort Edward, Glen's Falls.	Delaware and Hudson Canal..	6.92	335	20
252	N. Y..	1295	6093	New York, Babylon..	Southern, of Long Island	36.25	331	25
253	N. Y..	1277	6085	Newburg, Millerton..	Dutchess and Columbia.....	56.50	331	20
254	N. Y..	1815	6032	Fort Edward, Glen's Falls.	Delaware and Hudson Canal..	6.92	331	20
255	N. Y..	1268	6073	Roudout, Stamford ..	Ulster and Delaware, (late New York, Kingston and Syracuse.)	73.30	330	16
256	Ohio ..	21019	21019	Clayton, Keokuk.....	Toledo, Wabash and Western	44	325	25
257	Pa....	8064	8063	Connellsville, Uniontown.	Pittsburgh and Connellsville..	11.7	324	20
258	N. Y..	1235	6048	Oswego, Middletown.	New York and Oswego Midland	250.2	322	25
259	Pa....	8066	8065	Corning, Antrim	Fall Brook Coal Company.....	52.4	320	17
260	N. H..	254	1009	Concord, Claremont Junction.	Concord and Claremont.....	56.80	252	21
261	Pa..	8020	8020	Elmira, Blossburg....	Tioga	45.5	318	20
262	Pa....	8109	8109	Tioga Junction, Elmira.	Tioga and Elmira State Line..	23	318	20
263	Ill	.....	23047	Chester, Tamaroa	Iron Mountain, Chester and Eastern.	42	311	13½
264	Va....	23047	11016	Lynchburgh, Danville	Washington City, Virginia Midland and Great Southern.	65.97	311	22
265	N. Y..	11016	6083	Montgomery, Kingston.	Wallkill Valley	33.46	311	25
266	Cal ...	1275	46004	Folsom City, Shingle Springs.	Placerville and Sacramento Valley.	26.5	243	12
267	Va....	46004	11002	Owl Run, Warrenton	Washington City, Virginia Midland and Great Southern.	9.17	306	16
268	Pa....	11002	8005	Philadelphia, Norristown.	Philadelphia and Reading, (lessees Philadelphia, Germantown and Norristown.)	16.24	306	18
269	N. Y..	8005	6089	Cayuga, Ithaca.....	Cayuga	38.05	306	20
270	Pa....	1284	8064	Connellsville, Uniontown.	Pittsburgh and Connellsville..	12	302	20
271	N. Y..	8064	6047	Manorville, Sag Harbor.	Long Island.....	35.25	301	25
272	Mass .	1806	3045	Cohasset Narrows, Wood's Hole.	Old Colony.....	17.92	299	25
273	N. Y..	737	6036	De Kalb Junction, Norwood.	Rome, Watertown, and Ogdensburg.	25	297	30
274	Md ...	1227	10012	Clayton, Chestertown	Kent County.....	30.08	296	16
275	Ill	10012	23050	Vincennes, Danville..	Paris and Danville.....	114.19	233	20
276	N. Y..	1286	6075	Horseheads, Ithaca...	Utica, Ithaca and Elmira.....	48.5	231	22

n States in which the contract-term expired June 30, 1877, *&c.*—Continued.

Size, &c., of mail-car or apartment.	Trips per week.	Pay per mile per annum.	Former pay per mile per annum.	Amount of annual pay.	Former amount of annual pay.	Date of readjustment or adjustment.	Remarks.	Order.
Feet and inches.		*Dolls.*	*Dolls.*	*Dolls.*	*Dolls.*			
16 by 8.6, f. f., d. l.	12	55 00	47 70	1,349 15	1,156 72	July 1, 1877	0.28 m. increase	247
15.5 by 6.5, f. f., d. l	12	55 00	45 00	579 15	473 85	July 1, 1877	.....	248
in b. c.	33*	54 90	90 00	205 87	270 00	July 1, 1877	0.75 m. increase	249
in b. c.; no r. a.	18	54 90	45 00	1,886 36	2,530 00	July 1, 1877	Formerly $1,000 for m. m. .36 m. increase.	250
in b. c.; no r. a.	12	54 90	61 00	379 90	422 12	July 1, 1876	In Jan., 1877. $61 perm. from May 1 to June 30, 1876.	251
12.8 by 6.6, f. f., s. l.	12	54 00	45 00	1,957 50	3,581 25	July 1, 1877	Formerly $1,950 per annum. for terminal and side service.	252
8 by 6.5, f. f., s. l.	6	54 00	45 00	3,051 00	2,542 50	July 1, 1877	Main route; branch $15.	253
in b. c.; no r. a.	18	54 00	54 90	373 68	379 90	July 1, 1877	.....	254
12 by 7.5, f. f., s. l	6	54 00	45 00	3,958 20	3,298 50	July 1, 1877	.....	255
12 by 9.10, f. f., s. l.	12	54 00	62 00	2,376 00	2,728 00	July 1, 1876	In November, 1876. Branch; main route $242.50, (44.)	256
in b. c.; no r. a.	12	54 00	52 20	631 80	626 40	July 1, 1877	Branch; main route $76.50, (156.) .3 m. decrease.	257
14.8 by 7, f. f., s. l.	6	54 00	45 00	13,510 80	11,259 00	July 1, 1877	Main route	258
11.5 by 7, f. f., s. l.	14⅛*	54 00	67 50	2,829 60	.....	July 1, 1877	Formerly $45 per m. on 13.6 m. Main route; branch $46.80, (321.) Route as rearranged from July 1, 1877.	259
12 by 7, d. l. in summer, s. l. in winter—say 6 months in each year.	12	53 60	120 00	3,044 48	6,998 80	July 1, 1877	Formerly $480 per annum for m. m. 1.81 m. increase.	260
14.3 by 7; 10.2 by 6.3, f. f., s. l.	12	53 10	67 50	2,416 05	.....	July 1, 1877	Main route	261
14.3 by 7; 10.2 by 6.3, f. f., s. l.	12	53 10	.....	.....	.....	Feb. 1, 1877	Discontinued; covered by Route 8020.	262
9 by 6, f. f., s. l.	6	53 10	45 00	2,230 20	1,890 00	Apr. 1, 1877	In March, 1877	263
in b. c.; s. l	6	53 10	45 00	3,503 00	2,985 30	July 1, 1877	0 37 m. decrease	264
18 by 8.8, f. f., s. l	6	53 10	27 00	1,776 72	903 42	July 1, 1877	.....	265
no r. a.	6	53 00	50 00	1,404 50	1,300 00	July 1, 1874	In Nov., 1876. ⅛ m. increase. Pay 10 per cent. less from July 1, 1876.	266
in b. c.	12	52 20	45 00	478 67	412 65	July 1, 1877	Branch; main route $200.50, (58.)	267
no apt.; no r. a.	17½*	52 20	49 50	847 72	803 88	July 1, 1877	.....	268
8.1 by 6.9, f. f, s. l	9*	52 20	62 00	1,986 21	2,359 10	July 1, 1877	.....	269
in b. c.; no r. a.	12	52 20	48 60	626 40	583 20	Oct. 1, 1876	Branch; main route $98.10, (121.) In Oct., 1876.	270
10.6 by 6.3, f. f., s. l	6	52 20	48 60	1,840 05	1,713 15	July 1, 1877	.....	271
in b. c.; no r. a.	12	52 20	53 00	935 42	1,311 51	July 1, 1877	Formerly $375 per m. m. .25 m. increase.	272
in b. c.; no r. a.	12	52 20	62 50	1,305 00	1,562 50	July 1, 1877	Branch; main route $139.50, (89.)	273
10 by 6, f. f., s. l.	6	52 20	51 30	1,570 17	1,580 04	July 1, 1877	.....	274
10 by 6, f. f., s. l.	6	52 00	.....	.....	.....	June 1, 1876	31.81 m. extension. Pay from July 1, 1876, reduced 10 per cent. In Feb., 1877.	275
10.6 by 7, f. f., s. l.	7⅞*	52 00	.....	.....	.....	Oct. 1, 1874	13.12 m. from Aug. 1, 1875; 15.49 m. from Jan. 1, 1876. In Nov., 1876.	276

F.—*Table showing the readjustment of the rates of pay per mile on railroad-routes*

Order.	State.	Number of route.	New number of route.	Termini.	Corporate title of company carrying the mails.	Length of route.	Average weight of mails whole distance per day.	Miles per hour.
						Miles.	*Pounds.*	
277	R. I...	825	4003	Wickford Landing, Wickford Junction.	Newport and Wickford Railroad and Steamboat Co.	3.40	295	30
278	N. Y..	1265	6019	Dunkirk, Titusville ..	New York Central and Hudson River.	91.16	291	20
279	Mo ...	28013	28013	Brunswick, Pattonsburg.	Hatch & Van Every, (lessees Brunswick, Chillicothe and Saint Louis.)	80.5	289	15
280	N. J ..	7026	7026	Manchester, Barnegat Junction.	New Jersey Southern.....	20.30	288	25
281	W. Va	12001	12001	Harrisonburg, Staunton.	Baltimore and Ohio.....	26.06	287	19
282	Pa....	8078	8076	Red Bank Furnace, Driftwood.	Allegheny Valley.....	109.95	285	20
283	N. J ..	7023	7023	Jamesburg, Sea Girt..	Freehold and Jamesburg Agricultural.	27.70	285	30
284	N. H..	258	1010	Contoocook Village, Hillsborough Bridge.	Concord and Claremont.....	15	223	21
285	Pa	8054	8053	Freeport, Butler	Pennsylvania.....	22.06	281	20
286	Me ...	231	18	West Waterville, North Anson.	Somerset.....	25.70	278	20
287	Kans	33003	33003	Cherryvale, Independence.	Leavenworth, Lawrence and Galveston.	10	276	12
288	N. J..	7017	7017	Jersey City, Nyack...	Northern, of New Jersey	28.71	275	25
289	Va ...	11015	11015	Portsmouth, Weldon .	Seaboard and Roanoke.....	79.31	273	25
290	Pa....	8031	8031	Columbia, Sinking Springs.	Reading and Columbia.....	39.7	273	19
291	N. Y..	1204	6004	Vail's Gate Junction, (n. o.,) Turner's Junction.	Erie	12.75	273	29
292	Mass .	606	3033	Boston, Bellingham ..	New York and New England .	31.77	272	22
293	Iowa .	27033	27033	Albia, Knoxville	Chicago, Burlington and Quincy	33.97	222	12
294	N. Y..	1814	.....	Batavia, Attica.....	New York Central and Hudson River.	11	151	25
295	Cal ...	46019	46019	Visalia, Goshen	Visalia.....	8.37	130	15
296	Iowa .	27032	27032	Grinnell, Montezuma	Central, of Iowa, (lessees of Grinnell and Montezuma.)	14.75	118	18
297	Iowa .	27034	27034	Sioux City, Portlandville.	Sioux City and Pembina.....	30.01	106	15
298	N. J ..	2259	7038	Rahway, Perth Amboy.	Pennsylvania.....	7.45	69	30
299	Ohio..	.....	21053	Columbus, Toledo....	Columbus and Toledo.....	125.23	269	25
300	Pa....	8033	8032	Columbia, Frederick	Pennsylvania.....	69.90	266	25
301	N. Y..	1264	6071	Syracuse, Earlville...	Syracuse and Chenango.....	42.47	265	25
302	N. Y..	1278	6086	Cooperstown, Cooperstown Junction.	Cooperstown and Susquehanna Valley.	16	255	20
303	N. J ..	7005	7005	Bordentown, Trenton	Pennsylvania.....	7	252	35
304	Md ...	10014	10014	Bowie, Pope's Creek .	Baltimore and Potomac.....	48.88	251	14

in States in which the contract-term expired June 30, 1877, *&c.*—Continued.

Size, &c., of mail-car or apartment.	Trips per week.	Pay per mile per annum.	Former pay per mile per annum.	Amount of annual pay.	Former amount of annual pay.	Date of readjustment or adjustment.	Remarks.	Order.
Feet and inches.		*Dolls.*	*Dolls.*	*Dolls.*	*Dolls.*			
in b. c.; no r. a...	15¾*	51 30	52 20	174 42	177 48	July 1, 1877	.....	277
12 by 7, f. f., a. l...	6	51 30	45 00	4,676 50	4,102 20	July 1, 1877	.....	278
8 by 8, fixtures...	8¾*	51 30	45 00	4,129 65	3,622 50	Jan. 10, 1877	In Jan., 1877.....	279
8 by 6, f. f., a. l....	12	51 30	45 00	1,041 39	913 50	July 1, 1877	Branch; main route $66 60, (193.)	280
16 by 8.6, f. f, a. l.	7¼*	51 30	45 00	1,336 87	1,172 70	Jan. 11, 1877	From July 1, 1877. 36 m. increase. Part; residue $66.60, (194.)	281
14.6 by 8.9, f. f., a. l.	9*	51 30	45 00	5,640 43	4,947 75	July 1, 1877	.....	282
6.6 by 8.7, a. l	12	51 30	45 00	1,421 01	1,788 64	July 1, 1877	Formerly $542.14 per annum for side service.	283
10 by 4 6, fixtures, d. l. in summer, a. l. in winter, say 6 months in each year.	9*	50 90	50 00	763 50	750 00	July 1, 1877	.....	284
8.5 by 6, fixtures; d. l.	12	50 40	45 00	1,111 82	958 50	July 1, 1877	0.76 miles increase ..	285
12.6 by 6.6, f. f., a. l	6	50 40	45 90	1,295 28	1,179 63	July 1, 1877	.....	286
in b. c.; no r. a...	6	50 40	51 30	504 00	513 00	Apr. 1, 1877	Branch; main route $63.36, (200.) In April, 1877.	287
6 10 by 6.6., f. f., a. l	6	50 40	45 00	1,446 98	2,008 00	July 1, 1877	Formerly $658 for side service. 1.29 miles decrease.	288
21.4 by 8.6., f. f., a. l	6¾*	50 40	53 10	3,997 22	4,208 70	July 1, 1877	0.05 miles increase ..	289
6.10 by 6 5., f. f., a. l	14¼*	50 40	48 60	2,000 88	1,929 42	July 1, 1877	Main route.....	290
no apt.; no r. a...	20¾*	50 40	50 00	642 60	637 50	July 1, 1877	Branch; main route $55.80, (239.)	291
in b. c.; no r. a...	14½*	50 40	54 00	1,601 20	1,975 58	July 1, 1877	Formerly $260 per annum for m. m.	292
7 by 6.6., f. f., a. l..	6	50 00	.....	.....	.....	Feb. 21, 1876	New; in Jan., 1877. Pay from July 1, '76, reduced 10 per cent.	293
in b. c.; no r. a...	6	50 00	.....	.....	.....	Apr. 5, 1876	New; in May, 1876 Pay from July 1, '76, reduced 10 per cent.	294
caboose; no r. a..	7	50 00	.....	.....	.....	Jan. 24, 1876	New; in Sept., 1876. Pay from July 1, '76, reduced 10 per cent.	295
b. c.; no r. a.	6	50 00	.....	.....	.....	Jan. 1, 1876	New; distance counted from Junction 3¼ miles lap; in Oct., 1876. From July 1. 1876, pay reduced 10 per cent.	296
no r. a.....	7	50 00	.....	.....	.....	Mar. 16, 1876	New; in Nov., 1876. From July 1, 1876, pay reduced 10 per cent.	297
no apt.; no r. a ..	6	50 00	.....	.....	.....	Feb. 1, 1876	New. From July 1 1876, pay reduced 10 per cent.	298
15.11 by 9.3, f. f., a. l	12	49 50	.....	.....	.....	Dec. 1, 1876	Pay on 78.27 m. fixed from Jan 15, 1877. New; in June, 1877.	299
7.8 by 6.3, f. f., a. l	8⅝*	49 50	45 00	3,460 05	3,127 50	July 1, 1877	0.40 miles increase ..	300
9 by 6.8, fixtures, a. l.	8¾*	49 50	50 00	2,102 26	2,123 50	July 1, 1877	.....	301
in b. c.....	12	48 60	56 25	777 60	900 00	July 1, 1877	.....	302
in b. c.; no r. a...	18	48 60	88 00	340 20	616 00	July 1, 1877	Branch; main route $71.10, (172)	303
14.8 by 8 7, f. f., a. l	6	48 60	45 00	2,375 56	2,190 60	July 1, 1877	0.20 miles increase ..	304

F.—*Table showing the readjustment of the rates of pay per mile on railroad-routes*

Order.	State.	Number of route.	New number of route.	Termini.	Corporate title of company carrying the mail.	Length of route.	Average weight of mails whole distance per day.	Miles per hour.
						Miles.	*Pounds.*	
305	Ohio..	9044	21040	Marietta, Canal Dover.	Marietta, Pittsburgh and Cleveland.	99.96	249	25
306	N. Y..	1231	6043	Cassville Junction, Richfield Springs.	Delaware, Lackawanna and Western.	21	247	24
307	Mass.	632	3028	South Framingham, Milford.	Boston and Albany	12.30	247	25
308	R. I...	804	4005	Warren, Fall River ..	Fall River, Warren and Providence.	9.99	246	20
309	Pa....	8046	8045	Oil City, Ashtabula ..	Lake Shore and Michigan Southern.	87.49	243	20
310	N. J ..	7021	7021	Elmer, Salem	West Jersey	16.60	243	25
311	Conn.	903	5003	Middletown, Berlin Junction.	New York, New Haven and Hartford.	11.15	242	30
312	Pa....	8009	8009	Honesdale, Lackawaxen.	Erie	25.04	242	24
313	N. Y..	1247	6056	Schoharie Junction, Schoharie.	Schoharie Valley	4.38	241	25
314	Pa ...	8052	8051	Greenville, Hilliards .	Chenango and Allegheny	46.40	234	18
315	Va ...	11007	11007	Richmond, West Point.	Richmond, York River and Chesapeake.	40.50	233	25
316	N. Y..	1286	6075	Horseheads, Ithaca...	Utica, Ithaca and Elmira	48.5	231	22
317	Iowa	27008	27008	Burlington, La Clede.	Burlington and Southwestern	183.52	229	18
318	N. J ..	7037	7037	New York, Middletown.	New Jersey Midland	88	228	28
319	Pa....	8014	8014	Port Clinton, Williamsport.	Philadelphia and Reading	121.53	228	20
320	Mass.	655	3030	Palmer, Winchendon.	Boston and Albany	49.65	227	25
321	Pa....	8081	8065	Lawrenceville, Elkland.	Fall Brook Coal Company	12.28	224	13
322	N. Y..	1238	6049	Norwich, Cortland....	New York & Oswego Midland	49.21	223	15
323	N. Y..	1286	6075	Horseheads, Ithaca...	Utica, Ithaca and Elmira	48.50	223	24
324	Mass.	607	3034	East Thompson, Southbridge.	New York and New England .	17	217	28
325	Cal ...	46022	46022	Watsonville, Santa Cruz.	Santa Cruz	23.39	217	15
326	N. H..	262	1004	Hookset, Pittsfield...	Concord	20.35	214	18
327	Pa....	8015	8015	Sunbury, Tomhicken.	Pennsylvania	44.1	209	19
328	Neb ..	34003	.....	Omaha, Tekamah	Omaha and Northwestern	47.8	208	18
329	N. Y..	1296	6094	New York, Patchogue	Flushing, North Shore and Central.	59.21	203	25
330	Conn.	917	5019	Litchfield, Hawleyville.	Shepaug	32.78	192	20
331	Va....	11003	11003	Manassas, Strasburg .	Washington City, Virginia Midland & Great Southern.	62.55	188	10
332	N. Y..	1274	6082	Johnsonville, Greenwich.	Greenwich and Johnsonville..	14	172	25
333	Ala...	17015	17015	Chattanooga, Meridian.	Alabama and Chattanooga....	295	166	15
334	N. Y..	1251	6060	Skaneateles Junction, Skaneatetes.	Skaneateles	5.5	165	15
335	Md ...	10009	10009	Salisbury, Ocean City.	Wicomico and Pocomoke	31.02	162	20
336	N. Y..	1803	6031	Nineveh Junction, Jefferson Junction.	Delaware and Hudson Canal..	21	147	25
337	N. Y..	1223	6025	Schenectady, Ballston	.....do	16	140	28

in States in which the contract-term expired June 30, 1877, *&c.*—Continued.

Size, &c., of mail-car or apartment.	Trips per week.	Pay per mile per annum.	Former pay per mile per annum.	Amount of annual pay.	Former amount of annual pay.	Date of readjustment or adjustment.	Remarks.	Order.
Feet and inches.		*Dolls.*	*Dolls.*	*Dolls.*	*Dolls.*			
8.9 by 8.6, f. f., s. l.	6	48 60	50 00	4,858 05	4,998 00	July 1, 1876	In Nov., 1876	305
15.6 by 7, f.f.; no r. a.	12	47 70	55 00	1,001 70	1,155 00	July 1, 1877	.....	306
in b. c.; no r. a...	12	47 70	54 00	586 71	948 00	July 1, 1877	Formerly $300 for m. m. 0.30 m. increase.	307
in b. c.; no r. a...	12	47 70	60 00	476 52	420 00	July 1, 1877	2.99 miles increase ..	308
18 by 8.6, 13 by 8.6. f. f., s. l.	6	47 70	45 00	4,173 27	3,919 05	July 1, 1877	0.40 miles increase ..	309
10.8 by 6.5.; f. f., no r. a.	6	47 70	45 00	791 82	747 00	July 1, 1877	.....	310
in b. c.; no r. a...	18	47 70	46 80	531 85	718 00	July 1, 1877	Formerly $250 for m. m. 1.15 m. increase.	311
no apt.; no r. a...	12	47 70	54 00	1,194 40	1,350 00	July 1, 1877	0 04 miles increase ..	312
in b. c.; no r. a...	18	47 70	72 00	208 92	360 00	July 1, 1877	.....	313
11 by 6.10, f. f., s. l.	9*	46 80	54 00	2,171 52	2,565 00	July 1, 1877	1.10 m. decrease. Pay on 14 m. fixed from July 1, 1876.	314
11 by 7, f. f., s. l...	12	46 80	50 00	1,895 40	1,792 80	July 1, 1877	0.66 miles increase ..	315
10.6 by 7, f. f., s. l.	7½*	46 80	52 00	2,269 80	2,522 00	July 1. 1876	In Nov., 1876, 19.89 m. from Oct. 1, 1874; 13.12 m. from Aug. 1, 1875; 15.49 m. from Jan. 1, 1876, all at $52 per m., to June 30, 1876.	316
11.10 by 9 4, 13.6 by 8.6, f. f., s. l.	6	46 80	45 00	8,588 73	5,877 50	July 1, 1877	Pay on 53.02 m. fixed at $46.80 per m. from Dec. 1, 1876. In June 1877.	317
13.2 by 6.9, f. f. and m. c., s. l.	6½*	46 80	74 70	4,118 40	6,573 60	July 1, 1877	.....	318
9.6 by 8.8, f. f., s. l.	7½*	46 80	54 00	5,687 60	6,562 62	July 1, 1877	.....	319
10.3 by 6.3, f. f., s. l.	10½*	46 80	45 00	2,323 62	2,216 25	July 1, 1877	0.40 miles increase ..	320
11 by 7.4, f. f., s. l.	12	46 80	45 00	574 70	552 60	July 1, 1877	Branch; main route $54, (259.)	321
9 by 7.6, f. f.; no r. a	6	46 80	45 00	2,303 02	2,214 45	July 1, 1877	.....	322
10 6 by 7, fixtures, s. l.	6	45 90	50 00	2,226 15	2,269 80	July 1, 1877	.....	323
no r. a.....	21*	45 90	97 20	780 30	1,652 40	Jan. 1, 1877	Part; res., $161.10, (76.) In Feb., 1877.	324
in b. c.; no r. a...	7	45 90	.....	.....	.....	Aug. 1, 1876	New; in July, 1877..	325
7.3 by 4.8, f. f., s. l	6	45 90	50 00	934 06	1,000 00	July 1, 1877	0.35 miles increase ..	326
6.6 by 8 6, f. f., s. l.	6	45 00	48 60	1,984 50	2,143 26	July 1, 1877	.....	327
9.5 by 7.5, f. f., s. l	6	45 00	.....	.....	.....	Nov. 16, 1876	Pay on 40.2 m. under contract at $50 per mile. Residue, extension.	328
12.3 by 6.3, f. f., s. l.	11*	45 00	51 30	2,664 45	6,637 47	July 1, 1877	Main route; formerly $3,600 per annum for terminal and side service.	329
11.6 by 6.6, f. f., s. l.	9½*	45 00	60 00	1,475 10	1,935 00	July 1, 1877	0.53 miles increase ..	330
11.6 by 8 8, f. f., s. l.	6	45 00	51 00	2,814 75	2,871 05	July 1. 1877	.....	331
in b. c.; no r. a...	12	45 00	38 57⅛	630 00	540 00	July 1, 1877	.....	332
15 by 7, f. f., s. l...	6	45 00	53 00	10,840 50	15,635 00	July 1, 1876	In Dec., 1876. 270.5 m. at $36 per m. Land-grant.	333
7 by 3; no r. a....	18	45 00	50 00	247 50	560 00	July 1, 1877	Formerly $285 per annum for m. m.	334
9.6 by 8, f. f., s. l..	6	45 00	.....	.....	.....	July 1, 1876	New; 0.52 m. increase	335
6.6 by 6, f. f., s. l..	6	45 00	40 50	945 00	850 50	July 1, 1877	.....	336
In b. c.; no r. a...	18	45 00	46 80	720 00	748 80	July 1, 1877	.....	337

F.—*Table showing the readjustment of the rates of pay per mile on railroad-routes*

Order.	State.	Number of route.	New number of route.	Termini.	Corporate title of company carrying the mail.	Length of route.	Average weight of mails whole distance per day.	Miles per hour.
						Miles.	*Pounds.*	
338	Pa....	8060	8059	Lebanon, Tower City.	Philadelphia and Reading	43.1	135	20
339	N. Y..	1260	6068	Stapleton, Tottenville.	Staten Island	13	134	25
340	Va....	11019	11019	Harrisonburg, Staunton.	Shenandoah Valley	26.78	133	20
341	Me ...	3	2	Newport, Dexter	Maine Central	14.90	128	25
342	Pa....	8024	8024	Alton, Carrollton	Erie, (lessees).....	24.79	128	24
343	Pa....	8093	8091	Larrabee, Clermont...	McKean and Buffalo	22.15	127	15
344	N. Y..	1262	6070	East Gainesville, Perry	Rochester and Pine Creek	6.55	126	12
345	Mo ...	28033	28033	Kansas City, Lexington.	Wyandotte, Kansas City and Northwestern.	43.35	123	16
346	Pa....	8080	8078	Tunkhannock, Montrose.	Montrose	28.05	123	15
347	N. H..	253	1008	Franklin, Bristol	Northern	13.11	121	.....
348	Ind...	22035	22035	Muncie, La Fayette...	La Fayette, Muncie and Bloomington.	85.43	117	25
349	Ohio ..	21054	21054	Xenia, Washington C. H.	Dayton and Southeastern.....	31.15	112	18
350	Pa....	8086	8084	Hollidaysburg, Royer.	Pennsylvania.....	20.43	112	14
351	Wis ..	25029	25029	Lone Rock, Richland Centre.	Pine River Valley and Stevens Point.	16.5	111	12
352	Pa....	8062	8061	Schuylkill Haven, Glen Carbon.	Philadelphia and Reading.....	13.2	107	15
353	Mass .	637	3034	East Thompson, Southbridge.	New York and New England .	17.75	102	28
354	Ind...	22016	22016	Fairland, Martinsville	Fairland, Franklin and Martinsville.	38.50	102	20
355	N. H..	256	1003	Manchester, North Weare.	Concord	19.95	95	20
356	Mass .	633	3037	Canton Depot, Stoughton.	Boston and Providence	4.15	94	35
357	Mass	736	3060	Milford, Ashland	Providence and Worcester....	12.02	93	28
358	Pa....	8041	8040	Washington, Wheeling	Hempfield	32.4	89	18
359	Pa....	8058	8057	Pottstown, Colebrookdale.	Philadelphia and Reading.....	13.05	86	13
360	N. Y..	1210	6010	Goshen, Pine Island ..	Erie	11	81	18
361	Pa....	.....	8016	Lumber Yard, Ebervale.	Lehigh Valley	6.23	79	25
362	N. Y..	1233	6045	Mineola, Hempstead..	Long Island.....	2.5	76	25
363	Mass .	662	3059	Milford, Bellingham ..	Providence and Worcester....	4.10	74	28
364	Conn .	909	5012	Brookfield, Danbury..	Housatonic.....	6.30	72	25
365	N. J ..	7038	7038	Rahway, Perth Amboy	Pennsylvania	7.45	69	30
366	Ky ...	20019	20019	Louisville, Cecilian ...	Louisville and Nashville	48.28	62	15
367	Mass .	640	3043	Taunton, Middleboro'.	Old Colony.....	11.71	60	25
368	Tenn .	19017	19017	Knoxville, Maryville .	Knoxville and Maryville.....	16.27	56	12
369	N. Y..	1202	6002	Sufferns, Piermont....	Erie	18	56	25
370	Pa....	2412	8012	Hazle Creek Bridge, Audenreid, Tresckow.	Lehigh Valley	9.5	50	25
371	Pa....	2496a / 8059	8058	Barnitz, Williams Mills Junction.	Harrisburg and Potomac.....	13.9	48	10
372	Mass .	609	3038	Atlantic, West Quincy.	Old Colony.....	3.17	47	25

in States in which the contract-term expired June 30, 1877, *&c.*—Continued.

Size, &c., of mail-car or apartment.	Trips per week.	Pay per mile per annum.	Former pay per mile per annum.	Amount of annual pay.	Former amount of annual pay.	Date of readjustment or adjustment.	Remarks.	Order.
Feet and inches.		*Dolls.*	*Dolls.*	*Dolls.*	*Dolls.*			
6.7 by 4.11, f. f., s. l	8¼*	45 00	36 00	1,939 50	1,551 60	July 1, 1877	.....	338
In b. c.; no r. a...	12	45 00	50 00	585 00	1,800 00	July 1, 1877	Formerly $750 per annum for m. m.; 8 m. decrease.	339
8 by 8, f. f., s. l....	6	45 00	.....	.....	.....	July 1, 1876	New; in Dec., 1876. Discontinued as a separate route Jan., 10, 1877.	340
In b. c.; no r. a...	12	45 00	50 00	670 50	840 00	July 1, 1877	Formerly $140 per annum for m. m.; 0.96 m. increase.	341
No apt.; no r. a..	8¾*	45 00	36 00	1,115 55	916 00	July 1, 1877	0.71 m. decrease	342
8.6½ by 6.9, f. f., s. l.	8⅝*	45 00	40 50	996 75	943 65	July 1, 1877	1.15 m. decrease	343
No apt.; no r. a..	12	45 00	50 00	294 75	327 50	July 1, 1877	....	344
8.1 by 5.2, f. f., s. l.	6	45 00	.....	.....	.....	Dec. 1, 1876	In May, 1876. New.	345
6.8 by 4.8, f. f., s. l.	6	45 00	36 00	1,262 25	908 64	July 1, 1877	.....	346
In b. c.; no r. a...	6	45 00	50 00	589 95	650 00	July 1, 1877	0.11 m. increase. Branch; main route, $183.55, (62.)	347
14.2 by 7.9, f. f., s. l	6	45 00	.....	.....	.....	Aug. 10, 1876	In Feb., 1877. New.	348
8.2 by 7.6, f. f., s. l.	6	45 00	.....	.....	.....	Jan. 1, 1877	New; in July, 1877..	349
In b. c.; no r. a...	9	45 00	40 50	919 35	860 62	July 1, 1877	0.82 m. decrease	350
B. c.; no r. a	6	45 00	.....	.....	.....	Aug. 16, 1876	New; in Nov., 1876..	351
No apt.; no r. a..	9¼*	45 00	36 00	594 00	475 20	July 1, 1877	.....	352
No r. a.....	21*	45 00	45 90	798 75	780 30	July 1, 1877	Part: residue $160.30, (77;) 0.75 m. increase.	353
11 by 7, fix., s. l...	6	45 00	.....	.....	.....	Oct. 22, 1876	New; in April, 1877.	354
In b. c.; no r. a..	12	45 00	50 00	897 75	1,025 00	July 1, 1877	0.55 m. decrease	355
No apt.; no r. a..	18	45 00	50 00	186 75	250 00	July 1, 1877	Formerly $50 per annum for m. m.; 0.15 m. increase.	356
In b. c.; no r. a..	12	45 00	50 00	540 90	584 00	July 1, 1877	0.34 m. increase.....	357
16 by 8.6, f. f., s. l.	12	45 00	49 50	1,458 00	1,961 00	July 1, 1877	0.4 m. increase. Formerly $377 per annum for side service	358
No apt.; no r. a..	6	45 00	36 00	587 25	469·80	July 1, 1877	.....	359
No apt.; no r. a..	12	45 00	40 00	495 00	440 00	July 1, 1877	.....	360
No r. a.....	12	45 00	67 50	280 35	420 52	Oct. 1, 1876	In Sept., 1876. Br'ch: main route $72, (168.)	361
In b. c.; no r. a..	18	45 00	81 00	112 50	202 50	July 1, 1877	Branch; main route $86.40, (136.)	362
In b. c.; no r. a..	12	45 00	50 00	184 50	250 00	July 1, 1877	0 90 m. decrease	363
In b. c.; no r. a..	18	45 00	27 00	283 50	155 25	July 1, 1877	Branch; main route $98.20, (118;) 0.55 m. increase.	364
No apt.; no r. a..	6	45 00	50 00	335 25	372 50	July 1, 1876	$50 per m. from Feb. 1 to June 30, 1876.	365
12 by 7, f. f., s. l ..	6	45 00	.....	.....	.....	Jan. 1, 1877	New; in Mar., 1877..	366
In b. c.; no r. a..	24	45 00	50 00	526 95	527 00	July 1, 1877	1.17 m. increase.....	367
No r. a.....	6	45 00	.....	.....	.....	Mar. 20, 1876	New; in Aug., 1876. Pay from July 1, 1876; reduced 10 p.c.	368
6.10 by 6.6, f. f., s. l.	6½*	45 00	50 00	810 00	900 00	July 1, 1877	.....	369
No r. a.....	6	45 00	75 00	427 50	1,312 50	July 1, 1876	In Sept., 1876. 8 m. transferred to route 8016.	370
In b. c.; no r. a..	6	45 00	.....	.....	.....	Feb. 1, 1876	New. Discontinued July 13, 1877. Pay reduced 10 per cent. from July 1, 1876.	371
In b. c.; no r. a..	12	45 00	50 00	142 65	158 50	July 1, 1877	Branch; main route $86.40, (134;) .28 m. decrease.	372

F.—*Table showing the readjustment of the rates of pay per mile on railroad-routes*

Order.	State.	Number of route.	New number of route.	Termini.	Corporate title of company carrying the mail.	Length of route.	Average weight of mails whole distance per day.	Miles per hour.
						Miles.	*Pounds.*	
373	Pa....	8034	8035	Saxton, Dudley.....	Huntingdon and Broad Top..	6	42	12
374	Pa....	8026	8026	Strasburg, Leaman Place.	F. & H. Baumgardner.....	4.25	38	20
375	Mass	635	3040	South Abington Junction, Bridgewater.	Old Colony.....	7.07	35	20
376	Pa....	8076	8074	Conshohocken, Flourtown.	Philadelphia and Reading	7.25	30	7
377	Pa....	.....	8016	Tunnel, Eckley.....	Lehigh Valley	2.23	27	25
378	N. J ..	7031	7031	Atsion, Bridgeton	Vineland	37.75	106	35
379	N. J ..	7010	7010	Greensburg Station, New Brunswick.	Pennsylvania.....	29.13	98	20
380	N. J ..	7034	7034	Jersey City, Greenwood Lake.	Montclair and Greenwood Lake.	46.90	96	20
381	N. J ..	7029	7029	Whiting, Atco.....	New Jersey Southern.....	33.30	95	35
382	Pa....	8107	8104	South West Junction, (n. o.) Uniontown.	Pennsylvania, (operating Southwestern.)	37.38	93	20
383	Pa....	8096	8091	Oxford, Peters' Creek	Peach Bottom.....	21.93	93	20
384	Pa....	8102	8100	Tamaqua, Mauch Chunk.	Central, of New Jersey.....	13.7	78	20
385	N. J ..	7039	7039	Woodbury, Penn's Grove.	Delaware Shore.....	20.47	75	20
386	N. J ..	7002	7002	Somerville, Flemington.	Central, of New Jersey.....	16.06	73	20
387	Pa....	8101	8099	Osceola Mills, Ramey.	Pennsylvania	9.20	64	12
388	Utah .	41004	41004	Sandy Station, Bingham Cañon.	Bingham Cañon and Camp Floyd.	22.5	62	15
389	Ohio ..	21021	21021	Carey, Findlay	Cincinnati, Sandusky and Cleveland.	16	58	16
390	Del ...	9505	9505	Wilmington, Landenburg.	Wilmington and Western.....	19.53	53	12
391	N. J ..	7005	7005	Jamesburg, South Amboy.	Pennsylvania.....	14.95	50	30
392	Pa....	8079	8077	Chambersburg, Mont Alto.	Mont Alto	14.75	45	18
393	Pa....	8007	8007	Bridgeport, Downingtown.	Philadelphia and Reading.....	21.48	39	12
394	Pa....	8071	8069	Towanda, Barclay	Towanda Coal Co., (lessees Barclay Railroad.)	12	38	15
395	N. Y..	1825	6100	Valley Stream, Oceanus.	Long Island.....	8.50	28	20
396	Ill	23058	23058	Alvin, Fisher.....	Havana, Rantoul and Eastern.	40.5	70	9½
397	Cal ...	46021	46021	Los Angeles, Santa Monica.	Los Angeles and Independence	16.80	57	20
398	Kans .	33015	33015	Ottawa, Williamsburg	Kansas City, Burlington and Santa Fé.	17.38	55	18
399	N. H..	360	1016	Portsmouth, Dover...	Eastern.....	11.64	21	25
400	Minn	26019	26019	Worthington, Luverne	Worthington and Sioux Falls	34.61	90	15
401	N. J ..	7033	7033	Bridgeton, Port Norris	Bridgeton and Port Norris	20.24	68	20
402	Tenn	19013	.....	Tracy City, Cowan ...	Tennessee Coal and Railroad .	23	61	12
403	Pa....	8053	8052	Carlisle, Mountain Creek.	South Mountain Iron Co.....	18	48	12
404	Me ...	4	17	Calais, Princeton	St. Croix and Penobscot.....	21.29	44	12

in States in which the contract-term expired June 30, 1877, *&c.*—Continued.

Size, &c., of mail-car or apartment.	Trips per week.	Pay per mile per annum.	Former pay per mile per annum.	Amount of annual pay.	Former amount of annual pay.	Date of readjustment or adjustment.	Remarks.	Order.
Feet and inches.		*Dolls.*	*Dolls.*	*Dolls.*	*Dolls.*			
In b. c.; no r. a..	6	45 00	54 00	270 00	324 00	July 1, 1877	Branch; main route $57.60, (232.)	373
Apt.; no r. a.....	6	45 00	52 94	191 25	225 00	July 1, 1877	.....	374
In b. c.; no r. a..	12	45 00	40 00	318 15	390 00	July 1, 1877	Formerly $80 for m. m. 0.68 m. decrease.	375
No apt.; no r. a..	6	45 00	27 00	326 25	340 75	July 1, 1877	Formerly $145 for m. m.	376
No r. a.....	6	45 00	67 50	100 35	150 52	Oct. 1, 1876	In Sept., 1876 Br'ch; main route $72,(168.)	377
8 by 6, f. f., s. l....	6	40 50	36 00	1,528 87	1,359 00	July 1, 1877	.....	378
In b. c.; no r. a...	13*	40 50	36 00	1,179 76	1,048 68	July 1, 1877	.....	379
In b. c	6	40 50	36 00	1,899 45	1,206 00	July 1, 1877	$40.50 per m. on 13.4 m. from Aug. 5 to June 30, 1877.	380
8 by 6, f. f., s. l....	7½*	40 50	45 00	1,348 65	1,498 50	July 1, 1877	.....	381
In b. c.; no r. a..	6	40 50	.....	.....	.....	Jan. 1, 1877	New	382
In b. c.; no r. a..	8*	40 50	36 00	888 16	755 28	July 1, 1877	Pay on 3.76 m. fixed from July 1, 1876. 1.42 m. increase.	383
In b. c.; no r. a..	6	40 50	45 00	554 85	751 50	July 1, 1877	3 m. decrease.....	384
11.2 by 8.10., fix.; no r. a.	42	40 50	.....	.....	.....	Jan. 5, 1877	New	385
No apt.; no r. a..	6	40 50	38 70	650 43	621 52	July 1, 1877	.....	386
In b. c.; no r. a..	6	40 50	45 00	372 60	407 70	July 1, 1877	0.14 m. increase. Pay on 2.07 m. fixed from Apr. 15, 1877.	387
In b. c.; no r. a...	7	40 50	.....	.....	.....	Aug. 1, 1876	In Mar., 1877. New.	388
In b. c.; no r. a..	6	40 50	50 00	648 00	800 00	July 1, 1876	In Sept., 1876.....	389
7.5 by 6.10, f. f., s. l.	6	40 50	36 00	790 96	703 08	July 1, 1877	.....	390
In b. c.; no r. a...	9*	40 50	45 00	605 47	672 75	July 1, 1877	Branch; main route $71.10, (172.)	391
In locked box....	6	40 50	36 00	597 37	531 00	July 1, 1877	.....	392
No apt.; no r. a..	6	40 50	27 00	869 94	579 96	July 1, 1877	.....	393
In charge of conductor.	6	40 50	36 00	486 00	432 00	July 1, 1877	.....	394
In b. c.; no r. a..	18	40 50	.....	.....	.....	Jan. 1, 1877	New. Trips, 12 in summer; 6 in winter.	395
8 by 7; no r. a...	6	40 00	.....	.....	.....	Mar. 13, 1876	New. Pay from July 1, 1876, less 10 per ct. In Oct. and Nov., 1876.	396
18 by 9; no r. a...	6	40 00	.....	.....	.....	June 1, 1876	In March and April, 1877. New. Pay from July 1, 1876, reduced 10 per cent.	397
In b. c.; no r. a..	6	40 00	.....	.....	.....	Mar. 20, 1876	New; in May, 1877. Pay from July 1, 1876, reduced 10 per cent.	398
In b. c.; no r. a..	6	40 00	.....	.....	.....	Feb. 25, 1874	New; in Mar., 1876. Pay from July 1, 1876, reduced 10 per cent.	399
In b. c.; no r. a...	6	36 00	.....	.....	.....	Sept. 1, 1876	New; in Jan., 1877..	400
7.5 by 7, f. f.; no r. a.	9⅔*	36 00	27 00	728 64	1,196 48	July 1, 1877	Formerly $650 per annum for side service	401
In passenger car; no r. a.	6	36 00	40 00	828 00	920 00	July 1, 1876	In Sept., 1876.....	402
No r. a.....	6	36 00	25 00	648 00	450 00	July 1, 1877	.....	403
7 by 9; no r. a....	6	36 00	50 00	766 44	2,100 00	July 1, 1877	Formerly $1050 for side service; 0.29 m. increase.	404

F.—*Table showing the readjustment of the rates of pay per mile on railroad-routes*

Order.	State.	Number of route.	New number of route.	Termini.	Corporate title of company carrying the mail.	Length of route.	Average weight of mails whole distance per day.	Miles per hour.
						Miles.	*Pounds.*	
405	Va....	11014	11014	Glade Springs, Saltville.	Atlantic, Mississippi and Ohio	9.5	43	12
406	N. Y..	1816	6099	Crown Point, Hammondsville.	Crown Point Iron Co	11.82	25	10
407	Pa....	8099	8097	White Haven, Upper Lehigh.	Central, of New Jersey.....	9.85	23	20
408	Mass .	746	3053	Taunton, Attleboro' ..	Boston, Clinton, Fitchburg and New Bedford.	11.12	23	28
409	Pa....	8103	.....	Wilkesbarre, Wanamie.	Central, of New Jersey.....	11.55	21	15
410	Pa....	8097	8093	Pittsburgh, Castle Shannon.	Pittsburgh and Castle Shannon	7	14	12
411	N. Y..	1816	.....	Crown Point, Hammondsville.	Crown Point Iron Co	11.82	25	10
412	Miss..	18094	18004	Artesia, Starkville...	Mobile and Ohio	11.5	82	8
413	Ala...	17022	17022	Selma, Martin's Station.	New Orleans and Selma.....	20.5	33	15
414	Tex...	31013	31013	Houston, Orange	Texas and New Orleans.....	106.84	57	16
415	Va....	11017	.....	Chester, Winterpock .	Clover Hill, (late Richmond and Petersburg.)	18.75	12	18

Excess of former over present amount of annual pay by readjustment ..
Amount of reductions made under act of July 12, 1876.....

in States in which the contract-term expired June 30, 1877, *&c.*—Continued.

Size, &c., of mail-car or apartment.	Trips per week.	Pay per mile per annum.	Former pay per mile per annum.	Pay.	Former amount of annual pay.	Date of readjustment or adjustment.	Remarks.	Order.
Feet and inches.		*Dolls.*	*Dolls.*	*Dolls.*	*Dolls.*			
In locked apt	6	36 00	27 00	342 00	256 50	July 1, 1877	0.5 m. decrease	405
In passenger car; no r. a.	6	36 00	31 50	425 52	372 33	July 1, 1877	.....	406
In b. c.; no r. a ..	6	36 00	45 00	354 60	441 90	July 1, 1877	0.03 m. decrease	407
No r. a.....	18	36 00	67 50	400 32	1,125 22	July 1, 1877	5.55 m. decrease	408
b. c.: no r. a.....	6	36 00	.....	.....	.....	July 1, 1876	New; in Oct., 1876...	409
No apt.....	6	36 00	27 00	252 00	189 00	July 1, 1877	.....	410
Locked box in passenger car.	6	35 00	.....	.....	.....	June 1, 1876	New; in Jan., 1877. Pay from July 1, 1876, reduced 10 per cent.	411
In charge of conductor.	3½*	31 50	.....	.....	.....	July 1, 1876	Branch; main route $57.60. In Mar., 1877.	412
b. c.; no r. a.....	3	30 00	.....	.....	.....	May 1, 1876	New; in Oct., 1876, 6 trips a portion of the year. Pay from July 1, 1876, reduced 10 per cent.	413
7.2 by 6.8, f. f., ½ l.	3	27 00	.....	.....	.....	Dec. 1, 1876	New; in May and June, 1877.	414
In charge of conductor.	6	18 00	20 00	337 50	.....	July 1, 1877	.25 m. increase.....	415
				4,879,989 18	4,882,067 35			
				.....	4,879,989 18			
.....				.....	2,078 17			
.....				.....	465,851 29			

THOS. J. BRADY,
Second Assistant Postmaster-General.

Index to Table F.

Title.	Order.	Number of route.	New number of route.
Alabama and Chattanooga	333	17015	17015
Alexandria and Washington	56	11018	11018
Allegheny Valley	98	8042	8041
Do	202	1252	6061
Do	282	8078	8076
Annapolis and Elk Ridge	204	10007	10007
Atlanta and Richmond Air Line	93	15001	15001
Atlantic and Great Western	64	21005	21005
Do	87	21034	21034
Do	139	21034	21034
Do	142	21005	21005
Do	208	21005	21005
Do	233	8044	8043
Atlantic, Mississippi and Ohio	65	11013	11013
Do	183	11011	11011
Do	244	11012	11012
Do	405	11014	11014
Baltimore and Ohio	26	10003	10003
Do	33	10003	10003
Do. (operating Baltimore, Pittsburgh and Chicago).	40	21047	21047
Do	43	12002	12002
Do	47	12002	12002
Do. (lessees Sandusky, Mansfield and Newark)	49	21010	21010
Do	190	10017	10017
Do	194	12001	12001
Do. (lessees Sandusky, Mansfield and Newark)	230	21010	21010
Do	247	10005	10005
Do	249	10004	10004
Do	281	12001	12001
Baltimore and Potomac	304	10014	10014
Baltimore, Pittsburgh and Chicago. (See Baltimore and Ohio.)			
Bangor and Piscataquis	219	10	14
Barclay. (See Towanda Coal Company.)			
Baumgardner, F. and H	374	8026	8026
Bingham Cañon and Camp Floyd	388	41004	41004
Boston and Albany	18	605	3025
Do	35	605	3025
Do	220	650	3029
Do	307	632	3028
Do	320	655	3030
Boston and New York Air Line	85	913	5014
Boston and Providence	70	608	3035
Do	356	633	3037
Boston, Clinton, Fitchburg and New Bedford	122	641	3051
Do	150	642	3052
Do	152	656	3048
Do	153	631	3046
Do	167	644	3047
Do	170	659	3049
Do	408	746	3053
Bridgeton and Port Norris	401	7033	7033
Brunswick, Chillicothe and Saint Louis. (See Hatch and Van Every.)			
Buffalo and Jamestown	187	1290	6091
Buffalo, New York and Philadelphia	184	1249	6058
Burlington and Southwestern	317	27008	27008
Cayuga	269	1284	6089
Central, of Iowa, (lessees Grinnell and Montezuma)	296	27032	27032
Central, of New Jersey	82	7001	7001
Do	212	7003	7003
Do	384	8102	8100
Do	386	7002	7002
Do	407	8099	8097
Do	409	8103	.....
Central Ohio	54	21001	21001
Do	151	21001	21001
Central Pacific	99	46003	46003
Central Railroad and Banking Company	110	15012	15012
Do	173	15010	15010
Do	195	15005	15005
Central Vermont	71	407	2005
Do	81	744	3062
Do	163	902	5009
Do	175	647	3061
Champlain and Saint Lawrence	199	1258	6066
Cheshire	95	645	3055
Chicago, Burlington and Quincy	293	27033	27033
Cincinnati, Lafayette and Chicago	36	22029	22029
Cincinnati, Sandusky and Cleveland	389	21021	21021
Cincinnati, Wabash and Michigan	228	22022	22022
Cleveland, Columbus, Cincinnati and Indianapolis	51	21042	21042
Do	55	21042	21042
Clover Hill. (late Richmond and Petersburg)	415	11017	.....
Columbus and Toledo	299	.....	21053
Columbus and Xenia	31	.....	21014
Columbus, Chicago and Indiana Central	22	21015	21015
Concord	50	251	1001
Do	225	255	1002
Do	326	262	1004
Do	355	256	1003
Concord and Claremont	260	254	1009
Do	284	258	1010
Connecticut and Western	144	916	5018
Connecticut Central, (late Connecticut Valley and Springfield)	197	991	5016
Connecticut River	59	648	3067
Do	234	649	3056
Connecticut Valley	188	914	5015
Connecticut Valley and Springfield	162	991	5016
Do. (See Connecticut Central.)			
Consolidated European and North American	78	9	12
Do	138	244	13
Cooperstown and Susquehanna Valley	302	1278	6086
Crown Point Iron Company	406	1816	6099
Do	411	1816	.....
Dayton and Southeastern	349	21054	21054
Delaware and Hudson Canal	91	1224	6026
Do	117	1823	6033
Do	135	1245	6028
Do	154	1224	6026
Do	158	1221	6024
Do	177	1224	6026
Do	217	1815	6032
Do	229	8018	8018
Do	251	1815	6032
Do	254	1815	6032
Do	336	1803	6031
Do	337	1223	6025
Delaware and Maryland	242	9503	9503
Delaware, Lackawanna and Western	97	7028	7028
Do	116	8019	8019
Do	119	1229	6041
Do	147	1228	6040
Do	164	1230	6042
Do	306	1231	6043
Delaware Shore	385	7039	7039
Denver and Rio Grande	104	38001	38001
Do	112	38001	38001
Dutchess and Columbia	253	1277	6085
Eastern	399	360	1016
Eastern Shore	166	9502	9502

Index to Table F—Continued.

Title.	Order.	Number of route.	New number of route.
East Tennessee, Virginia and Georgia	67	19002	19002
Do	128	19002	19002
Erie	19	1201	.....
Do	25	1201	6001
Do	52	1208	6008
Do	63	1208	.....
Do	127	1207	6007
Do	161	1205	6005
Do	206	1206	6006
Do	236	1209	6009
Do	239	1204	6004
Do	291	1204	6004
Do	312	8009	8009
Do. (Lessees)	342	8024	8024
Do	360	1210	6010
Do	369	1202	6002
Erie and Pittsburgh	113	8045	8044
Fairland, Franklin and Martinsville	354	22016	22016
Fall Brook Coal Company	259	8066	8065
Do	321	8061	8065
Fall River, Warren and Providence	308	804	4005
Flushing, North Shore and Central	329	1296	6094
Fonda, Johnstown and Gloversville	155	1273	6081
Freehold and Jamesburg Agricultural	283	7023	7023
Gloversville and Northville	165	1813	6098
Do	185	1813	6098
Grand Trunk	108	24007	24007
Do	137	6	7
Greenwich and Johnsonville	332	1274	6082
Grinnell and Montezuma. (See Central, of Iowa.)			
Hanover Branch	178	8104	8102
Do	198	8034	8033
Harrisburg and Potomac	371	{2496a / 8059}	8058
Hartford, Providence and Fishkill	145	911	5007
Hatch & Van Every, (lessees Brunswick, Chillicothe and Saint Louis)	279	28013	28013
Havana, Rantoul and Eastern	396	23058	23058
Hempfield	358	8041	8040
Hot Springs	216	29006	29006
Housatonic	118	909	5012
Do	364	909	5012
Huntingdon and Broad Top	232	8035	8034
Do	373	8034	8035
Indianapolis and Saint Louis	102	22025	22025
Indianapolis, Bloomington and Western	124	22017	22018
Indianapolis, Cincinnati and La Fayette	29	22005	22005
Do	34	22003	22003
Iron Mountain, Chester and Eastern	263	23047	23047
Kansas City, Burlington and Santa Fé	398	33015	33015
Kent County	274	10012	10012
Knox and Lincoln	126	13	15
Knoxville and Maryville	368	19017	19017
Lackawanna and Bloomsburg	133	8017	8017
La Fayette, Muncie and Bloomington	348	22035	22035
Lake Shore and Michigan Southern	3	1241	6052
Do	4	1241	6052
Do	5	1241	.....
Do	6	1241	.....
Do	7	1241	6052
Do	8	1241	6052
Do	9	1241	.....
Lake Shore and Michigan Southern	10	1241	.....
Do	13	21045	21045
Do	16	21045	21045
Do	21	21007	21007
Do	24	21007	21007
Do	28	1241	.....
Do	41	1241	6052
Do	309	8046	8045
Leavenworth, Lawrence and Galveston	123	33008	33008
Do	200	33003	33003
Do	287	33003	33003
Lehigh Valley	74	8077	8075
Do	84	8010	.....
Do	168	.....	8016
Do	361	.....	8016
Do	370	2412	8012
Do	377	.....	8016
Long Island	136	1233	6045
Do	201	1234	6046
Do	271	1806	6047
Do	362	1233	6045
Do	395	825	6100
Los Angeles and Independence	397	46021	46021
Louisville and Nashville	366	20019	20019
Louisville, New Albany and Chicago	186	12008	22008
McKean and Buffalo	343	8093	8091
Macon and Brunswick	192	15013	15013
Maine Central	37	5	6
Do	38	5	6
Do	46	1	1
Do	48	2	5
Do	125	5	6
Do	146	34	3
Do	157	2	5
Do	191	11	4
Do	215	1	1
Do	341	3	2
Manchester and Lawrence	92	622	3063
Marietta and Cincinnati	39	21028	21028
Do	45	21028	21028
Marietta, Pittsburgh and Cleveland	305	9044	21040
Missouri and Western	180	28020	28028
Missouri River, Fort Scott and Gulf	130	33005	33005
Missouri Pacific	27	28001	28001
Mobile and Ohio	412	18004	18004
Mont Alto	392	8079	8077
Montclair and Greenwood Lake	380	7034	7034
Montpelier and Wells River	129	528	2012
Montrose	346	8080	8078
Morris and Essex	90	7013	7013
Nashua and Rochester	86	371	1012
Naugatuck	114	904	5011
Nevada County Narrow Gauge	245	46020	46020
New Haven and Derby	240	915	5017
New Haven and Northampton	94	906	5010
Do	223	906	5010
Do	248	661	3069
New Jersey Midland	318	7037	7037
New Jersey Southern	193	7026	7026
Do	280	7026	7026
Do	381	7029	7029
Newport and Wickford Railroad and Steamboat Company	277	825	4003
New Orleans and Selma	413	17022	17022
New Orleans, Mobile and Texas	80	17013	17013
New York and Harlem	103	1219	.....
New York and New England	72	975	5002
Do	76	607	3034
Do	77	607	3034
Do	79	975	5002
Do	292	606	3033
Do	324	607	3034

Index to Table F—Continued.

Title.	Order.	Number of route.	New number of route.
New York and New England	353	607	3034
New York and Oswego Midland	258	1235	6048
Do	322	1238	6049
New York Central and Hudson River	11	1217	.....
Do	14	1211	.....
Do	69	1211	.....
Do	278	1265	6019
Do	294	1814	.....
New York, Kingston and Syracuse. (See Ulster and Delaware.)			
New York, New Haven and Hartford	12	907	5006
Do	17	905	5005
Do	66	904	5004
Do	311	903	5003
New York, Providence and Boston	73	802	4002
Northern	62	253	1008
Do	347	253	1008
Northern Central	57	10002	10002
Do	115	1255	6063
Do	120	8021	8021
Northern, of New Jersey	288	7017	7017
Northwestern	327	34003	.....
Old Colony	83	637	3041
Do	93a	609	3038
Do	100	638	3042
Do	107	634	3039
Do., (late South Shore)	222	636	3064
Do	250	651	3044
Do	272	737	3045
Do	367	640	3043
Do	372	609	3038
Do	375	635	3040
Omaha and Northwestern	328	34003	.....
Oswego and Syracuse	131	1256	6064
Paris and Danville	275	23050	.....
Peach Bottom	383	8096	8064
Pennsylvania	1	7004	.....
Do	2	8001	.....
Do., (lessees Philadelphia and Erie)	61	8022	8022
Do do	143	8022	8022
Do	148	7008	7008
Do	172	7005	7005
Do	179	8040	8039
Do	209	8027	8027
Do., (lessees)	210	8036	8035
Do	221	8039	8038
Do	226	8043	8042
Do	237	8074	8072
Do	241	8039	8038
Do	285	8054	8051
Do	298	22259	7038
Do	300	8033	8032
Do	303	7005	7005
Do	327	8015	8015
Do	350	8086	8084
Do	365	7038	7038
Do	379	7010	7010
Do., (operating Southwestern)	382	8017	8014
Do	387	8101	8099
Do	391	7005	7005
Petersburg	60	11009	11009
Philadelphia and Baltimore Central	141	8008	8008
Philadelphia and Erie. (See Pennsylvania.)			
Philadelphia and Reading	101	8075	8073
Do	105	8075	.....
Do	106	8022	8022
Do	205	8013	8013
Philadelphia and Reading, (lessees Philadelphia, Germantown, and Norristown)	268	8005	8005
Do	319	8014	8014
Do	338	8060	8059
Do	352	8062	8061
Do	359	8058	8057
Do	376	8076	8074
Do	393	8007	8007
Philadelphia, Germantown and Norristown. (See Philadelphia and Reading.)			
Pine River Valley and Stevens Point	351	25029	25029
Pittsburgh and Castle Shannon	410	8097	8095
Pittsburgh and Connellsville	121	8064	8064
Do	156	8064	8063
Do	257	8064	8063
Do	270	8064	8064
Pittsburgh, Cincinnati and Saint Louis	15	21032	21032
Do	32	21027	21027
Do	176	8056	8055
Pittsburgh, Fort Wayne and Chicago	53	21002	21002
Do	96	8029	8029
Pittsburgh, Titusville and Buffalo	303	8025	8025
Pittsburgh, Virginia and Charleston	238	8083	8081
Placerville and Sacramento Valley	266	46004	46004
Portland and Rochester	88	7	8
Providence and Worcester	111	801	4001
Do	357	736	3060
Do	363	662	3059
Providence, Warren and Bristol	307	803	4004
Reading and Columbia	290	8031	8031
Richmond and Danville	68	11006	11006
Richmond and Petersburgh	42	11008	11008
Do (See Clover Hill.)			
Richmond, Fredericksburg and Potomac	30	11001	11001
Richmond, York River and Chesapeake	315	11007	11007
Rochester and Pine Creek	344	1202	6070
Rome, Watertown, and Ogdensburg	89	1227	6036
Do	182	1225	6034
Do	211	1227	6038
Do	218	1267	6037
Do	231	1226	6035
Do	273	1227	6036
Sacramento Valley	214	46005	46005
Saint Croix and Penobscot	404	4	17
Saint Louis, Keokuk, and Northwestern	160	28018	.....
Sandusky, Mansfield, and Newark. (See Baltimore and Ohio.)			
Santa Cruz	325	46022	46022
Seaboard and Roanoke	289	11015	11015
Schoharie Valley	313	1247	6056
Sciota Valley	246	9055	21051
Shenandoah Valley	340	11019	11019
Shenango and Allegheny	314	8052	8051
Shepang	330	917	5019
Sioux City and Pembina	297	27034	27034
Skaneateles	334	1251	6060
Somerset	286	231	18
Southern Central	149	1276	6084
Southern, of Long Island	252	1295	6093
Southern Pacific	159	46018	46018
South Mountain Iron Company	403	8053	8052
South Shore. (See Old Colony.)			
Southwestern	181	15011	15011
Do	189	15016	15016

Index to Table F—Continued.

Title.	Order.	Number of route.	New number of route.
Southwestern. (See Pennsylvania.)			
Springfield, Athol and Northeastern	227	658	3068
Staten Island	339	1260	6068
Syracuse and Chenango	301	1264	6071
Syracuse, Binghamton and New York	140	1257	6065
Tennessee Coal and Railroad Company	402	19013	.....
Terre Haute and Indianapolis	20	22002	22002
Do	23	23031	23031
Texas and New Orleans	414	31013	31013
Tioga	261	{8020 {8109	} 8020
Tioga and Elmira State Line	262	.....	8109
Toledo, Wabash and Western	44	21019	21019
Do	256	21019	21019
Towanda Coal Company, (lessees Barclay Railroad)	394	8071	8069
Utica and Black River	169	1283	6087
Do	213	1288	6088
Ulster and Delaware, (late New York, Kingston and Syracuse)	255	1268	6073
Utica, Clinton and Binghamton	224	1248	6057
Utica, Ithaca, and Elmira	243	1269	6074
Do	276	1286	6075
Do	316	1286	6075
Do	323	1286	6075
Vineland	378	7031	7031
Visalia	295	46019	46019
Wallkill Valley	265	1275	6083
Washington and Ohio	235	11004	11004
Washington City, Virginia Midland and Great Southern	58	11002	11002
Do	264	11016	11016
Do	267	11002	11002
Do	331	11003	11003
Westchester and Philadelphia	174	8003	8003
Western Maryland	196	10006	10006
West Jersey	109	7018	7018
Do	171	7019	7019
Do	310	7021	7021
Wicomico and Pocomoke	335	10009	10009
Wilmington and Western	391	9505	9505
Worcester and Nashua	75	643	3066
Do	132	371	1012
Worthington and Sioux Falls	400	26019	26019
Wyandotte, Kansas City and Northwestern	345	28033	28033

G.—*Statement compiled from the printed annual reports of the Post-Office Department, showing the amount of railroad mail-service and the cost thereof, from the commencement of such service in the fiscal year ending June 30, 1836, to June 30, 1877.*

Date.	Length of routes.	Annual transportation.	Annual cost.	Length of new railroad routes.	Date.	Length of routes.	Annual transportation.	Annual cost.	Length of new railroad routes.	Date.	Length of routes.	Annual transportation.	Annual cost.	of new routes.
	Miles.	*Miles.*	*Dollars.*	*Miles.*		*Miles.*	*Miles.*	*Dollars.*	*Miles.*		*Miles.*	*Miles.*	*Dollars.*	
June 30, 1836	.....	*1,878,296	.....	.....	June 30, 1848	.....	4,327,400	584,192	.....	June 30, 1862	21,338	22,777,219	2,498,115	
June 30, 1837	974	*1,793,024	*307,444	.....	Oct. 1, 1848	4,957	.....	587,204	222	June 30, 1863	22,152	22,871,558	2,538,517	
June 30, 1838	.....	*2,356,852	*404,123	.....	June 30, 1849	5,497	4,861,177	635,740	540	June 30, 1864	22,616	23,301,942	2,567,044	
June 30, 1839	.....	*3,396,055	*520,602	.....	June 30, 1850	6,886	6,524,593	818,227	1,389	June 30, 1865	23,401	24,087,568	2,707,421	
June 30, 1840	.....	*3,889,053	*595,353	.....	June 30, 1851	8,255	8,364,503	985,019	1,369	June 30, 1866	32,092	30,609,467	3,391,592	‡8,691
June 30, 1841	.....	*3,946,450	*585,843	.....	June 30, 1852	10,146	11,082,768	1,275,520	1,891	June 30, 1867	34,015	32,437,900	3,812,600	1,923
June 30, 1842	3,091	*4,424,262	432,568	2,117	June 30, 1853	12,415	12,986,705	1,601,329	2,269	June 30, 1868	36,018	34,886,178	4,177,126	2,003
June 30, 1843	.....	*5,692,402	*733,687	.....	June 30, 1854	14,440	15,433,389	1,758,610	2,025	June 30, 1869	39,537	41,399,284	4,723,680	3,519
November 4, 1843	3,714	.....	531,752	623	June 30, 1855	18,333	19,202,469	2,073,089	3,893	June 30, 1870	43,727	47,551,970	5,128,901	4,190
June 30, 1844	.....	*5,747,355	*804,006	.....	June 30, 1856	20,323	21,809,296	2,310,389	1,990	June 30, 1871	49,834	55,557,048	5,724,979	6,107
June 30, 1845	.....	*6,484,592	*843,430	.....	June 30, 1857	22,530	24,267,944	2,559,847	2,207	June 30, 1872	57,911	62,491,749	6,502,771	8,077
October 31, 1845	4,092	.....	562,141	378	June 30, 1858	24,431	25,763,452	2,828,301	1,901	June 30, 1873	63,457	65,621,445	7,257,196	5,546
June 30, 1846	.....	*7,781,828	*870,570	.....	June 30, 1859	26,010	27,268,384	3,243,974	1,579	June 30, 1874	67,734	72,460,545	9,113,190	4,277
November 1, 1846	4,402	.....	587,769	310	June 30, 1860	27,129	27,653,749	3,349,662	1,119	June 30, 1875	70,083	75,154,910	9,216,518	2,349
June 30, 1847	.....	4,170,403	597,475	.....	Discontin'd May 31, 1861	6,886	5,701,093	978,910	.....	June 30, 1876	72,348	77,741,172	9,543,134	2,265
Nov. 1, 1847	4,735	.....	597,923	333	In operation June 30, 1861	22,018	23,116,823	2,543,709	1,775	June 30, 1877	74,546	95,358,710	§9,053,936	2,198

* Railroad and steamboat service combined; no separate report.
† Decrease, caused by the discontinuance of routes in Southern States.
‡ Increase, caused in part by the resumption of service in the Southern States.
§ Decrease in cost caused by reductions in the rates of pay, under act of July 12, 1876.

THOS. J. BRADY,
Second Assistant Postmaster-General.

H.—*Statement of the number, description and prices of mail-bags, mail-catchers, and mail-locks and keys purchased, and of the expense incurred on account thereof, during the fiscal year ended 30th June, 1877, viz:*

Number.	Description.	Sizes.	Price.	Cost.	Aggregate.
2,000	Leather mail-pouches	No. 2	$5 70	$11,400 00	
4,200	.....do	No. 3	4 75	19,950 00	
3,000	.....do	No. 4	3 80	11,400 00	
2,800	... do	No. 5	2 70	7,560 00	
	Royalty of patent on same		10	1,200 00	
12,000					$51,510 00
400	Leather horse-mail bags	No. 1	6 60	2,640 00	
300	.....do	No. 2	5 60	1,680 00	
700					4,320 00
2,000	Mail-catcher pouches		4 25	8,500 00	
					8,500 00
60,000	Jute canvas mail-sacks, (with cord attached)	No. 1	78	46,800 00	
10,000	.....do	No. 2	52	5,200 00	
5,000	.....do	No. 3	15	750 00	
75,000					52,750 00
4,000	Cotton canvas mail-sacks, (for foreign mails)	No. 3	21	840 00	840 00
20,000	Mail-bag label-cases		12	2,400 00	2,400 00
100,000	Mail-bag label-hooks		01½	1,500 00	
	Royalty of patent on same		00½	500 00	
					2,000 00
294,675	Printed wooden tags		00½	1,473 38	
353,775	.....do		3½ mills	1,238 20	
648,450					2,711 58
	Repairs of mail-bags of every description				37,389 71
200	Mail-catchers		15 00	3,000 00	
400	Sockets		40	160 00	
100	Rubber springs		60	60 00	
					3,220 00
	Total expense of mail-bags and mail-catchers				165,641 29
	MAIL LOCKS AND KEYS.				
20,000	Iron mail-locks		58	11,600 00	
5,000	Iron mail-keys		11	550 00	
					12,150 00
1,000	Street letter-box locks		1 25	1,250 00	
500	Street letter-box lock keys		15	75 00	
					1,325 00
	Total cost of mail locks and keys				13,475 00

THOS. J. BRADY.
Second Assistant Postmaster-General.

I.—*Railway post-office lines in the United States June 30, 1877, showing the increase and decrease in the service since June 30, 1876.*

Terminal points.	Miles of route.	Miles of service.	Service each way.	$1,400.	$1,300.	$1,150.	$1,000.	Increase of miles of route from June 30, 1876, to June 30, 1877.	Increase of miles of service from June 30, 1876, to June 30, 1877.	Decrease of miles of service from June 30, 1876, to June 30, 1877.	Increase in number of clerks from June 30, 1876, to June 30, 1877.				Decrease in number of clerks from June 30, 1876, to June 30, 1877.			Increase in lines of railway post-offices from June 30, 1876, to June 30, 1877.
											$1,400.	$1,300.	$1,150.	$1,000.	$1,400.	$1,300.	$1,000.	
Albany to Buffalo, N. Y	298	596	Daily	3	9	10	19			596		9	10		9	10	1	
Atlanta to Augusta, Ga	171	342	...do			4							4			4		
Baltimore, Md., to Canandaigua, N. Y	325	650	...do		3	2	5					3	2		3	2		
Baltimore, Md., to Grafton, W. Va	280	1,120	Twice daily		10	8	3					10	8		10	8		
Bangor to Vanceborough, Me	118	236	Daily			4							4			4		
Bloomington, Ill., to Mexico, Mo	200	400	...do		2	3	1					2	3		2	3		
Boston, Mass., to Portland, Me	116	232	...do		4	4	2					4	4		4	3	1	
*Boston, Mass., to Troy, N. Y	192	384	...do															
Boston, Mass., to Saint Albans, Vt	290	1,160	Twice daily	1	3	8	1		580			3	8	1	3	8		
Boston, Mass., to Albany, N. Y	200	800	...do	1	8	10	12					8	10		11	4		
Boston to Wellfleet, Mass	122	488	...do			6			244				6			6		
Boston to Fitchburg, Mass	50	100	Daily				1											
Boston, Mass., to Bangor, Me	249	996	Twice daily	1	10	12	1					10	12	1	10	13		
Bristol to Chattanooga, Tenn	242	484	Daily		4	2	2					4	2		4	2		
Buffalo, N. Y., to Toledo, Ohio	295	1,770	Thrice daily	4	8	20	27		590			8	20		10	20		
*Burlington to Council Bluffs, Iowa	291	582	Daily															
Cairo to Centralia, Ill	112	224	...do		3	3	1					3	3		3	5		
Chattanooga, Tenn., to Atlanta, Ga	140	280	...do	1	3	4						3	4		3	4		
Chicago, Ill., to Fort Howard, Wis	242	484	...do		4	8	1					4	8		4	11		
Chicago, Ill., to Toledo, Ohio	243	1,458	Thrice daily	4	10	23	24		486			10	23	4	10	19		
†Chicago, Ill., to Burlington, Iowa	207	828	Twice daily		8	10	2		302			8	10		6	13		
Chicago to Freeport, Ill	121	242	Daily		4	3						4	3		3	4		
Chicago, Ill., to Cincinnati, Ohio	310	620	...do		6	9	a8					6	9	5	5	8		
Chicago, Ill., to Iowa City, Iowa	237	474	...do		4	4	2					4	4	2	5	8		
Chicago, Ill., to Cedar Rapids, Iowa	219	876	Twice daily		9	8	3		438			9	8	3	5	6		
Chicago to Centralia, Ill	258	516	Daily		6	5	4					6	5	1	6	9		
Chicago, Ill., to Saint Louis, Mo	280	560	...do	1	6	7	1					6	7	1	6	8		
Chicago, Ill., to Davenport, Iowa	183	366	...do		4	2	2	183	366			4	2	2				
Chicago, Ill., to Dubuque, Iowa	202	404	...do		4	4		202	404			4	4					1
‡Chicago, Ill., to Sparta, Wis	255	510	...do	2	6	13	4	255	510		2	6	13	4				
Cleveland to Cincinnati, Ohio	244	488	...do	1	4	3	1					4	3		4	6		
Cleveland, Ohio, to Indianapolis, Ind	282	564	...do		3	3	3					3	3	3	4	6		
*Clinton to Council Bluffs, Iowa	350	700	...do															
Cincinnati, Ohio, to Saint Louis, Mo	340	680	...do		3	11	1					3	11	1	3	14		
*Davenport to Council Bluffs, Iowa	307	614	...do															
Detroit, Mich., to Chicago, Ill	284	568	...do		4	6	1					4	6		4	5		
*Dubuque, Iowa, to Centralia, Ill	345	690	...do															

*Dubuque to Fort Dodge, Iowa	214	428	....do															
Grafton, W. Va., to Cincinnati, Ohio	309	618	....do		6	7				618		6	7		5	8	1	
Grafton, W. Va., to Chicago, Ill	559	1,118	....do		9	6	5					9	6	2	9	7		
†Galesburgh to Quincy, Ill	99	198	....do		2	1		99	198			2	1					
Indianapolis, Ind., to Saint Louis, Mo	261	522	....do		4		5					4		5	4	5		
La Fayette, Ind., to Quincy, Ill	273	546	....do	1	4	10	2					4	10	1	4	15		
Louisville, Ky., to Nashville, Tenn	185	370	....do	2	5	10						5	10		5	9		
Lynchburg, Va., to Bristol, Tenn	203	406	....do	1	3	2	2					3	2	2	3	4		
Louisville, Ky., to Milan, Tenn	284	568	....do		3	4						3	4		3	4		
New Orleans, La., to Cairo, Ill	548	1,096	....do	2	6	10	2					6	10	2	6	13		
New York, N. Y., to Boston, Mass	234	936	Twice daily	2	8	18	8					8	18		9	18	3	
New York, N. Y., to Washington, D. C	232	1,392	Thrice daily	4	9	10	b16		464			9	10		10	8		
New York to Dunkirk, N. Y	459	1,836	Twice daily	2	12	15	18					12	15		11	16	2	
New York to Albany, N. Y	144	288	Daily	1	4	3	7			288		4	3	1	5	4		
Omaha, Nebr., to Ogden, Utah	1,032	2,064	....do	2	11	17	6					11	17	5	13	20		
Philadelphia to Pittsburgh, Pa	358	2,864	Four daily	1	8	6	21		2,148			8	6		6	5	2	
Pittsburgh, Pa., to Saint Louis, Mo	620	1,240	Daily		12	13	43					12	13	28	6	8		
Pittsburgh, Pa., to Cincinnati, Ohio	313	626	....do		3	4	5					3	4			6		
Quincy, Ill., to Kansas City, Mo	261	522	....do		4	5						4	5		4	5		
Quincy, Ill., to Denison, Tex	593	1,186	....do		10	4						10	4		10	4		
Rochester to Niagara Falls, N. Y	77	154	....do			3							3			3		
San Francisco, Cal., to Ogden, Utah	881	1,762	....do	1	10	15	2					10	15		11	15		
Saint Louis, Mo., to Atchison, Kans	330	1,320	Twice daily	4	9	7	4		660			9	7	4	3	7		
Toledo, Ohio, to La Fayette, Ind	203	406	Daily		4	8	1					4	8		4	9		
Washington, D. C., to Petersburg, Va	155	620	Twice daily	2	9	9	7					9	9	2	11	9		
*Petersburg, Va., to Weldon, N. C	65	260	....do															
Washington, D. C., to Lynchburg, Va.	178	356	Daily		4	2	3					4	2	2	4	3		
Hornellsville to Buffalo, N. Y	91	182	....do															
Total	17,761	46,370		44	311	408	289	739	7,390	1,502								

* Service performed by route-agents detailed to this line.
‡ Formerly Milwaukee, Wis., to Saint Paul, Minn.

† These routes cover the one formerly called Chicago to Quincy, Ill.
a b (See recapitulation of foregoing table on page 138.)

Recapitulation and comparative statement of the service of June 30, 1876, and June 30, 1877.

	June 30, 1876.		June 30, 1877.		Increase.		Decrease.	
Number of lines of railway post-offices		63		64		1		
Aggregate number of miles of the above		17,713		17,761		48		
Number of miles of actual service performed daily		41,671		46,370		4,699		
Number of miles of actual service performed annually		15,209,915		16,924,050		1,714,135		
Number of head clerks at $1,400 per annum	361		42		.....		319	
Number of head clerks at $1,300 per annum	.....		313		313			
Number of clerks at $1,200 per annum	463		.....		.....		463	
Number of clerks at $1,150 per annum	.....		411		411			
Number of assistant clerks at $1,000 per annum	216		283		67			
a An assistant clerk at $500 per annum	1		1		.....			
b An assistant clerk at $840 per annum	1		1		.....			
Total number of clerks		1,042		1,051		791		782
With annual compensation amounting to		$1,278,340		$1,222,690	Net decrease.....			$55,650
					Net increase....	9		

THOS. J. BRADY,
Second Assistant Postmaster General.

POST-OFFICE DEPARTMENT,
OFFICE GENERAL SUP'T RAILWAY MAIL SERVICE,
Washington, D. C., November 1, 1877.

RAILWAY POST-OFFICE CLERKS.

SIR: The expenditure for railway post-office-clerks for the fiscal year ending June 30, 1876, was $1,223,750.19. The expenditure for the fiscal year ending June 30, 1877, was $1,223,569.41, a decrease of one one-hundredths of 1 per cent., (.01 per cent.)

The appropriation for the fiscal year ending June 30, 1878, is $1,225,000, allowing no margin whatever for increase.

At the commencement of the fiscal year the salaries of employés of this service were rearranged, with a view to the reduction of the expenses.

The salaries of head clerks, railway post-office (except those designated to take charge of the different lines) were reduced from $1,400 per annum to $1,300.

The salaries of clerks, railway post-office, were reduced from $1,200 to $1,150 per annum.

The salaries of assistant clerks, railway post-office, were not reduced, but left at $1,000 per annum.

The mileage of daily railway post-office service has increased over that in operation June 30, 1876, which included the fast mail-service, 4,625 miles, and the mileage of annual service 1,688,135 miles, although during the year the fast and limited services on the New York Central and Hudson River, Lake Shore and Michigan Southern, and Pennsylvania Railroad and its connections were discontinued, and but partially restored.

The appropriation, however, does not allow a proportionate increase in the force of railway post-office clerks, and it has been necessary to make details from various other lines where, by any possibility, the men could be spared.

At present there are about 50 route-agents detailed for duty in the railway post-office cars to perform the local work, while their services are needed upon the lines to which they were appointed. It is deemed that the public service would suffer less by using them to perform that portion of the duties on railway post-office lines, which, though strictly route-agents' work, is generally performed by the railway post-office clerks on the same lines, or, in other words, in making distribution of local mails.

In addition to this, this branch absolutely needs for the proper performance of its work about twenty additional men to be distributed to the different new lines in various sections of the country. This branch of the service would then stand as follows:

Number of clerks in the service June 30, 1877	1,046
Additional number needed	70
Total	1,116
Number of clerks in the service June 30, 1876	1,042
Number of clerks required at present	1,116
An increase of	74
Or an increase of	$7\frac{1}{10}$%

The mean increase of the force in this service each year since 1870 has been 19.6 per cent.

In this connection particular attention is called to the reasons given,

in the statement of mail distributed, for the rapid increase of work in railway post-offices.

Taking the service as it stood on June 30, 1877, and the number of agents detailed for railway post-office duty, as a basis, the estimate for railway post-office clerks for the year ending June 30, 1879, will be as follows:

The service as it stood June 30, 1877	$1,222,690
Add 70 clerks detailed from other branches of the service	70,000
	1,292,690
Add 7 per cent., which is the same increase given above, the estimate will be	1,385,000

ROUTE-AGENTS.

The expenditure for route-agents for the fiscal year ending June 30 1876, was $940,151.97; for the fiscal year ending June 30, 1877, $959,680.25; an increase of 2.1 per cent.

The appropriation for the year ending June 30, 1878, is $1,000,000.

The force and expense of this branch were somewhat reduced, owing to the limits of the appropriation, during the past fiscal year.

The old basis of compensation was $900 per annum for an average daily run of 90 miles, and $30 additional to the $900 per annum for each additional 10 miles to the average daily run. This was reduced so that they received only $20 in addition to the annual salary for each additional 10 miles to the average daily run.

The necessities of the service, however, made an immediate increase necessary as soon as the appropriation for the present fiscal year became available, and the standing of the service is as large as possible under the appropriation.

The increase was made necessary by the detail of a large number of these agents to perform route-agents' service on lines where the railway post-office clerks had performed this duty in connection with their more distinctive duties.

With all the increase allowable under the appropriation, on many lines the force is too small for the prompt and efficient performance of the work.

Undue increase of expense in this branch is prevented, it will be seen, by the method of payment. All salaries are based upon the actual number of miles run by the agents. The actual increase of expense is therefore governed entirely by the increase in the railroad system.

The estimate for the fiscal year ending June 30, 1879, is therefore an increase of 7 per cent. on the appropriation for the present fiscal year, or $1,070,000.

MAIL-ROUTE MESSENGERS.

The expenditure for mail-route messengers for the fiscal year ending June 30, 1876, was $147,152.27; for the fiscal year ending June 30, 1877, $146,538.93.

The only difference between mail-route-messenger and route-agents' service is the length of the route, or the average daily run and the amount of annual compensation, mail-route messengers receiving less than $900 per annum, and route-agents $900 and over, consequently the reduction in route-agents' pay increases the expenditure for mail-route messengers, as it takes them out of the one class into the other. Consequently the standing of this branch of the service on June 30, 1877, showed at the rate of an annual expenditure of $162,086.

This branch of the service probably increases faster than any other, except the railway post-office branch, in consequence of the building of

a large number of short lines of railroad upon which it is necessary to place service.

There are at present very many routes upon which mails are carried without messengers to accompany and distribute them, owing to the lack of appropriations out of which to pay them for their services.

Reduction in the expense of this class is also very difficult as it is paid out in such small amounts. Since June 30 some reduction has been made, which will be continued as fast as possible, to come within the limits of the appropriation.

Taking the present standing of the service as a basis, an increase of 7 per cent. should be made for the ensuing fiscal year. This would place the estimate at $171,000 for the fiscal year ending June 30, 1879.

Deficient appropriation for this service is more directly felt by the public than for any other. As a rule there is only one mail-route messenger upon any road. To discontinue that service means to discontinue to the public on the line of the road all facilities for the expeditious interchange of mails. As their salaries range from $200 to $800, averaging about $500 per annum, a further material reduction is hardly possible.

LOCAL AGENTS.

The expenditure for local agents during the fiscal year ending June 30, 1876, was $101,813.27. The expenditure for the fiscal year ending June 30, 1877, was $105,718.70.

These employés have charge of the transfer of mails at all junctions of railroad-routes.

Provision should be made for additional security to the mails during such transfers.

This can only be done by providing sufficient appropriations to employ such number of men as will enable the department to have all transfers made under the protection of an employé. In making these transfers the mails are more or less exposed to the public. They are generally made in the midst of the bustle and confusion attendant upon the arrival and departure of trains and through the mass of people rushing to and from them.

The development and perfection of the registered-letter system are dependent in a very great measure upon direct transfers, which can only be made where these officers are employed.

The report of the Third Assistant Postmaster General will show the importance of this recommendation.

The estimate for the fiscal year ending June 30, 1879, is $125,000.

DUTIES AND SALARIES.

I can but urge the justice of making the appropriation for this class of employés sufficient to enable the department to restore them to the old rate of $1,400 per annum for head clerks railway post-offices; $1,200 per annum for clerks railway post-offices; and $1,000 and less for assistant clerks, route-agents, and mail-route messengers.

The employés of this service are required to be absent from their homes, on expense, on an average at least half the time. This, of course, lessens their salaries a proportionate amount. The responsibilities of a railway post-office clerk in charge of a car are greater than those of most employés of the government at similar salaries. His duties require constant and unremitting attention and study. He is required in many cases to be on duty night and day. He is liable to, and is, called upon

at all hours, and can have no regular holidays. He is exposed to all the dangers incident to railroad life, and upon his fidelity and knowledge of the service is dependent interests of unusual magnitude. He is deprived of the domestic privileges enjoyed by all other classes of governmental officers. His peculiar duties requiring him to remain on his feet when the train is in motion, (the time when all classes of railroad employés, except, perhaps, conductors on local trains, can sit at ease,) intensifies the physical strain attendant upon the jar and motion of the cars, and, in a few years, brings upon him diseases which necessitate his retirement from the service. This is becoming more apparent every year.

It would seem that all these considerations would warrant the strong recommendation that sufficient appropriation be made to enable the department to restore former salaries.

The average salary of a railway post-office clerk is $1,160 per annum. He is required to expend at least $160 as expenses when absent from his home. His average daily run upon the cars is from 25 to 50 per cent. greater than that of the train-men upon the same roads. As stated above, all his time upon a train is occupied in his distribution, standing at a case; nor does his duty commence or end with the starting or arrival of the train upon which he runs. He is, on the contrary, required to report to the car for duty from one to four hours in advance of the starting time, and after arrival required to accompany the mails to the post-office, attend to transfers, and other and similar duties. His "lay off" is necessarily devoted to preparation of "slips," "labels," &c., for his "run," or to study, in order that he may keep posted in the daily changes made in the schedules of connecting trains, or the changes in the routes by which offices off the railroads are supplied. Ninety-five per cent. of all the mail in the country pass over and is handled upon the railroad-lines of the country. The importance of the service can be shown in no better way.

This increase, or rather restoration, of the salaries would necessitate an increase in the estimates given above of 5 per cent.

CHANGE IN CLASSIFICATION.

It has been the practice heretofore to make a separate appropriation for each of the following classes of employés of the service, viz:

Railway post office clerks.

Route-agents.

Mail-route messengers.

Local agents.

It was originally intended that the first class (railway post-office clerks) should only make distribution of the through mails while in transit.

The second, (route-agents,) a distribution of local mails to post-offices on the line of their routes.

The third, (mail-route messengers,) to be in charge of closed mails only.

The fourth, (local agents,) to attend to transfers of mails at stations.

As the service has grown and improved, it was found that the duties could be combined and extended; so that now each employé who performs duty in an apartment or car on a railroad is required to make the distribution of all through mails, or of mails originating on the line, for connecting routes, to attend to the distribution and delivery of the local mails, to take charge of all pouches conveyed over the line, and make all necessary transfers of mail. The principal distinction, in

, being the character of the line, whether long or short, heavy or
ıt.

t would, therefore, be better for the service, and prove more economi-
should the appropriation be made in gross for these four classes,
ignating them as postal clerks, and allowing, say, five classes: First
ıs, pay not to exceed $900 per annum; second class, pay not to ex-
l $1,000 per annum; third class, pay not to exceed $1,200 per an-
ı; fourth class, pay not to exceed $1,400 per annum; assistant pos-
clerks, pay not to exceed $800 per annum.

hould this be done, the third and fourth class would be employed
y where the necessity of the service requires railway post-office cars,
the others upon all other routes, and classed, as now, according to
ance run or work performed.

LE A.—*Statement for the years* 1870 *to* 1877, *inclusive, of the number of railway-post-*
ice clerks, route-agents, mail-route messengers, and local agents employed; amount of
nual compensation to each class; and the percentage of increase and decrease in num-
r and annual compensation.

Year.	Number of railway post-office clerks in service at end of each fiscal year.	Increase in railway-post-office clerks.	Increase per cent.	Annual compensation.	Increase of annual compensation.	Decrease of annual compensation.	Increase per cent. of annual compensation.	Decrease per cent. of annual compensation.
.....	375	.....	.....	$442,600 00	.....	.....	.....	.....
.....	513	138	36.8	649,400 00	$206,800 00	.....	46.72	.....
.....	642	129	25.15	821,600 00	172,200 00	.....	26.53	.....
.....	752	110	17.13	941,000 00	19,400 00	.....	2.36	.....
.....	850	98	13.03	1,058,200 00	117,200 00	.....	12.45	.....
.....	901	51	6.00	1,163,600 16	105,400 16	.....	9.96	.....
.....	1,042	141	15.65	1,223,750 19	60,150 03	.....	5.16	.....
.....	1,046	4	00.38	1,223,569 41	.....	$180 78	.....	00.01

Year.	Number of route-agents in service at end of each fiscal year.	Increase in route-agents.	Increase per cent.	Annual compensation.	Increase in annual compensation.	Decrease in annual compensation.	Increase per cent.	Decrease per cent.
.....	587	.....	.....	$574,600 00	.....	.....	.....	.....
.....	684	97	16.52	671,280 00	$96,680 00	.....	16.83	.....
.....	764	80	11.69	737,820 00	66,540 00	.....	9.91	.....
.....	862	98	12.83	828,240 00	90,420 00	.....	12.25	.....
.....	936	74	8.58	896,680 00	68,440 00	.....	8.26	.....
.....	987	51	5.45	896,390 52	.....	$289 48	.....	00.32
.....	1,017	30	2.95	940,151 97	43,761 45	.....	4.88	.....
.....	1,065	48	4.72	959,660 86	19,508 89	.....	2.07	.....

Statement for the years 1870 *to* 1877, *inclusive, &c.*—Continued.

Year.	Number of mail-route messengers in service.	Increase in mail-route messengers.	Decrease in mail-route messengers.	Increase per cent.	Decrease per cent.	Annual compensation.	Increase in annual compensation.	Decrease in annual compensation.	Increase per cent.	Decrease per cent.
1870	78	.....	.....	.....	.....	$45,710 00	.....	.....	.....	.....
1871	103	25	.....	32.05	.....	61,910 00	$16,200 00	.....	35.44	.....
1872	146	43	.....	41.75	.....	89,910 00	28,000 00	.....	45.23	.....
1873	171	25	.....	17.12	.....	106,740 00	16,830 00	.....	18.72	.....
1874	211	40	.....	23.39	.....	136,540 00	29,800 00	.....	27.92	.....
1875	225	14	.....	6.64	.....	129,999 35	.....	$6,540 65	.....	4.79
1876	219	.....	6	.....	2.67	147,152 27	17,152 92	.....	13.19	.....
1877	248	29	.....	13.24	.....	147,598 61	446 34	.....	03.03	.....

Year.	Number of local agents in service at end of year.	Increase of local mail-agents.	Decrease of local mail-agents.	Increase per cent.	Decrease per cent.	Annual compensation.	Increase in annual compensation.	Decrease in annual compensation.	Increase per cent.	Decrease per cent.
1870	66	.....	.....	.....	.....	$46,230 00	.....	.....	.....	.....
1871	82	16	.....	24.24	.....	58,430 00	$12,200 00	.....	26.39	.....
1872	95	13	.....	15.85	.....	69,216 00	10,786 00	.....	18.46	.....
1873	110	15	.....	15.79	.....	82,896 00	13,680 00	.....	19.76	.....
1874	124	14	.....	12.73	.....	94,710 00	11,814 00	.....	14.25	.....
1875	125	1	.....	00.80	.....	89,980 70	.....	$4,729 30	.....	4.11
1876	137	12	.....	9.6	.....	101,813 27	11,832 57	.....	13.15	.....
1877	136	.....	1	.....	00.73	105,718 70	3,905 43	.....	3.83	.....

NOTE.—The annual compensation for the years 1875, 1876, and 1877 is the amount actually expended, while the annual compensation for the previous years is the amount estimated upon the basis of the number of clerks, route-agents, &c., in service during those years.

TABLE B.—*Statement for the years* 1870 *to* 1877, *inclusive, of steamboat and railroad routes, miles of annual service on the same, also miles of railway post-office service and miles of annual service thereon, together with the increase and decrease per cent.*

Year.	Miles of steamboat-routes.	Increase of miles of steamboat-routes.	Decrease of miles of steamboat-routes.	Increase per cent.	Decrease per cent.	Miles of annual service on steamboat-routes.	Increase in annual miles of service on steamboat-routes.	Decrease in annual miles of service on steamboat-routes.	Increase per cent.	Decrease per cent.
1870	20,695	.....	.....	.....	.....	4,122,385	.....	.....	.....	.....
1871	20,334	.....	361	.....	1.74	4,684,778	562,393	.....	13.64	.....
1872	18,860	.....	1,474	.....	7.25	4,308,436	.....	376,342	.....	8.03
1873	16,762	.....	2,098	.....	11.12	3,947,785	.....	360,651	.....	8.37
1874	18,634	1,872	.....	11.17	.....	4,078,725	130,940	.....	3.32	.....
1875	15,788	.....	2,846	.....	15.27	3,958,852	.....	119,873	.....	2.94
1876	14,883	.....	905	.....	5.73	3,704,533	.....	254,319	.....	5.14
1877	17,685	2,802	.....	18.83	.....	4,038,238	333,705	.....	9.01	.....

TABLE B.—*Statement of steamboat and railroad routes, &c.*—Continued.

Year.	Miles of railroad service.	Increase of miles of railroad service.	Increase per cent.	Miles of annual service on railroad-routes	Increase in miles of annual service on railroad-routes.	Increase per cent.
1870	43,727	.....	.....	47,551,970	.....	.....
1871	49,834	6,107	13.96	55,557,048	8,005,078	16.83
1872	57,911	8,077	16.21	62,491,749	6,934,701	12.48
1873	63,457	5,546	9.40	65,621,445	3,129,696	5.01
1874	67,734	4,277	6.74	72,460,545	6,839,100	10.42
1875	70,083	2,349	3.47	75,154,910	2,694,365	3.72
1876	72,348	2,265	3.23	77,741,172	2,586,262	3.44
1877	74,546	2,198	3.04	85,358,710	7,617,538	9.80

Year.	Total miles of railroad and steamboat routes.	Increase of miles of railroad and steamboat routes.	Decrease of miles of railroad and steamboat routes.	Increase per cent.	Decrease per cent.	Miles of annual service on railroad and steamboat routes.	Increase of miles of annual service on railroad and steamboat-routes.	Increase per cent.
1870	64,422	.....	.....	.....	.....	51,674,355	.....	.....
1871	70,168	5,746	.....	8.92	.....	60,241,826	8,567,471	16.58
1872	76,771	6,603	.....	9.41	.....	66,800,185	6,558,359	10.89
1873	80,219	3,448	.....	4.49	.....	69,569,230	2,679,045	4.14
1874	86,368	6,149	.....	7.66	.....	76,539,270	6,970,040	10.02
1875	85,871	.....	497	.....	00.57	79,113,762	2,574,492	3.36
1876	87,231	1,360	.....	1.58	.....	81,445,705	2,331,943	2.95
1877	92,231	5,000	.....	5.73	.....	89,396,948	7,951,243	9.76

Year.	Miles of route on which there is railway post-office service.	Increase of miles of route of railway post-office service.	Increase per cent.	Miles of annual service by railway post-office.	Increase of miles of annual service by railway post-office.	Increase per cent.
1870	8,252	.....	.....	6,500,000	.....	.....
1871	11,208	2,956	35.82	10,072,540	3,572,540	54.96
1872	14,117	2,909	25.95	12,296,850	2,224,310	22.08
1873	14,866	749	5.30	12,747,625	450,775	3.66
1874	16,414	1,548	10.41	14,307,635	1,560,010	12.23
1875	16,932	518	3.16	14,639,785	332,150	2.32
1876	17,713	781	4.61	15,209,915	570,130	3.89
1877	17,761	48	00.27	16,898,040	1,688,125	11.10

Year.	Miles of route of railroad or steamboat on which there is route-agent or mail-messenger service.	Increase of miles of route of railroad or steamboat on which there is route-agent or mail-messenger service.	Increase per cent.	Miles of annual railroad or steamboat service on which there is route-agent or mail-messenger service.	Increase of miles of annual railroad or steamboat service on which there is route-agent or mail-messenger service.	Increase per cent.
1870	.....	.....	.....	.....	.....	.....
1871	.....	.....	.....	.....	.....	.....
1872	.....	.....	.....	.....	.....	.....
1873	.....	.....	.....	.....	.....	.....
1874	.....	.....	.....	.....	.....	.....
1875	.....	.....	.....	.....	.....	.....
1876	61,685	.....	.....	54,435,000	.....	.....
1877	65,789	4,104	6.65	61,973,238	7,538,238	13.85

INCREASE IN SERVICE.

The accompanying tables A and B are an exhibit of the increase of this branch of the postal service. While the increase in the miles of railroad routes in operation June 30, 1877, over that in operation June 30, 1876, was three and four one-hundredths per cent., (3.04 per cent.,) the increase in miles of annual service performed over these routes was nine and eight-tenths per cent., (9.8 per cent.)

The increase in the total miles of railroad and steamboat routes was five and seventy-three one-hundredths per cent., (5.73 per cent.,) while the increase in the miles of annual service performed over these routes was nine and seventy-six one-hundredths per cent., (9.76 per cent.)

The increase in miles of railway post-office routes was but twenty-seven one-hundredths per cent., (.27 per cent.,) while the increase in the miles of annual service performed was eleven and ten one-hundredths per cent., (11.10 per cent.)

The increase in the miles of route on which there is route-agent and mail-route-messenger service was six and sixty-five one-hundredths per cent., (6.65 per cent.,) while the increase in the miles of annual service performed was thirteen and eighty-five one-hundredths per cent., (13.85 per cent.) Thus the annual service performed has increased in much greater proportion than the miles of route over which it was performed.

The increase in the number of clerks and agents and in the expense of performing the service has not shown a corresponding ratio.

The service annually performed by railway post-office clerks has increased eleven and ten one-hundredths per cent., (11.10 per cent.) The annual expenditure has decreased fourteen one-hundredths of one per cent., (.14 per cent.)

The service annually performed by route-agents and mail-route messengers has increased thirteen and eighty-five one-hundredths per cent., (13.85 per cent.) The expenditure for route-agents and mail-route messengers has increased two and four one-hundredths (2.04 per cent.) and three and two one-hundredths per cent., (3.02 per cent.,) respectively.

The increase in annual mileage service performed does not indicate fully the increased work performed by the employés of the railway mail-service.

As it is well known, the railway post-office service is of comparatively recent origin. The work formerly performed in post-offices at distributing centers has been gradually assumed by the railway post-office lines as the system has been perfected, until now no distribution is made at any post-office except for the lines immediately centering at that post-office. The balance of the mail is massed on some line of railway post-office which directly connects the section for which the mail is destined, and distributed while in transit.

TABLE C.—*Statement of mail distributed on the various railway post-office lines of the railway mail-service.*

Division.	Date.		Months.	Number of letters distributed.	Number of sacks of paper mail distributed.	Whole number of pieces of paper mail distributed.	Number of packages of registered matter.
First	July 1, 1876	June 30, 1877	12	27, 047, 641	100, 809	20, 163, 200	.....
Second	July 1, 1876	June 30, 1877	12	76, 054, 770	222, 062	44, 309, 220	555, 478
Third	July 1, 1876	June 30, 1877	12	32, 289, 300	128, 294	25, 658, 800	261, 800
Fourth	July 1, 1876	June 30, 1877	12	10, 775, 600	29, 496	5, 899, 200	.....
Fifth	July 1, 1876	June 30, 1877	12	92, 282, 860	429, 507	85, 901, 333	.....
Sixth	July 1, 1876	June 30, 1877	12	96, 469, 547	426, 457	85, 291, 466	.....
Seventh	July 1, 1876	June 30, 1877	12	54, 120, 370	220, 140	44, 028, 000	.....
Eighth	July 1, 1876	June 30, 1877	12	17, 021, 400	50, 038	10, 007, 600	.....
Through mail line, New York to Chicago	July 1, 1876	June 30, 1877	12	78, 847, 800	292, 824	58, 564, 800	257, 070
Total	.....	.....	...	484, 909, 308	1, 899, 627	379, 823, 619	1, 074, 348

TABLE D.—*Consolidated statement of facing-slips received on letter-packages made up by railway post-office clerks and route-agents in the several divisions of the railway mail-service during the year ending June* 30, 1877.

Divisions.	Total number of slips returned.	Total correct.	Total incorrect.	Total errors.	Total number of packages misent.	Total number of packages misdirected.	Number of letters handled.
First	1, 200, 017	1, 194, 075	5, 942	9, 172	(a)	(a)	60, 000, 850
Second	1, 512, 128	1, 506, 405	5, 723	9, 764	108	67	75, 606, 400
Third	761, 088	755, 513	5, 575	7, 359	327	.....	38, 054, 400
Fourth	1, 334, 187	1, 322, 443	11, 744	17, 411	(a)	(a)	66, 709, 350
Fifth	1, 900, 94[illegible]	1, 871, 094	29, 854	51, 783	430	164	95, 047, 400
Sixth	3, 546, 005	3, 488, 152	57, 853	85, 818	1, 630	.....	177, 300, 250
Seventh	1, 406, 496	1, 381, 596	24, 900	40, 447	(a)	(a)	70, 324, 800
Eighth	121, 692	120, 263	1, 429	2, 061	(a)	(a)	b 6, 084, 600
Through mail line, New York to Chicago	607, 204	586, 488	20, 716	41, 102	(a)	(a)	87, 868, 800
Total	12, 389, 765	12, 226, 029	163, 736	264, 917	2, 495	231	676, 996, 850

a Not given. *b* Imperfect return.

MAGNITUDE OF DISTRIBUTION ON LINES OF RAILWAY MAIL-SERVICE.

Table C is an exhibit of the amount of mail distributed in the various lines of railway post offices.

As this is the first year in which a record has been kept, it is not absolutely perfect, but is sufficiently so to give some idea of the workings of the service.

The number of letters distributed, amounting to over four hundred and eighty-four (484,000,000) million, does not include the letters handled in "city" packages, made up direct for the larger post offices at the office of origin, or in the railway post-offices, but includes only those distributed piece by piece to the various connecting lines and to post offices on the line, nor does it include mail local to the line over which the railway post-office passes.

Table D gives the returns of slips made on railway post-office and route-agent lines during the year. Each package of letters, except those

for "city" delivery direct, is covered by a slip bearing the name of the clerk making the same, date and name of the route upon which he performs service. All mistakes contained in these packages are checked against the clerk who makes the package, and a record of the same is forwarded to the general office. In this way the manner in which each clerk performs his duty is known.

It will be seen that during the year twelve million three hundred and eighty-nine thousand seven hundred and sixty-five (12,389,765) slips were returned. Of these twelve million two hundred and twenty-six thousand and twenty-nine (12,226,029) covered packages in which the distribution was correct, and one hundred and sixty-three thousand seven hundred and thirty-six (163,736) covered packages which contained mistakes in the distribution.

The packages covered by the one hundred and sixty-three thousand seven hundred and thirty-six (163,736) slips contained two hundred and sixty-four thousand nine hundred and seventeen (264,917) letters that were missent and delayed.

The estimated number of letters contained in the packages covered by the twelve million three hundred and eighty thousand seven hundred and sixty-five (12,389,765) slips is six hundred and seventy-six million nine hundred and ninety-six thousand eight hundred and fifty, (676,996.850.)

It would therefore appear that one letter out of each twenty-five hundred letters distributed was missent.

As these slips are not placed upon "direct" packages for city delivery, which constitute about fifty per cent. (50 per cent.) of all the mails, the showing in reality is much better than indicated above.

The estimated number of letters mailed in the United States during one year is seven hundred million, (700,000,000;) of pieces of second-class mail, one hundred and sixty million, (160,000,000,) and of pieces of third-class mail, two hundred and forty million, (240,000,000,) a total of one thousand one hundred million (1,100,000,000) pieces of mail matter.

By table C it will be seen that there was distributed on the railway post-offices alone, during the year, four hundred and eighty-four million nine hundred and nine thousand three hundred and eight (484,909,308) pieces of "letter" mail, and three hundred and seventy nine million eight hundred and twenty-three thousand six hundred and nineteen (379,823,619) pieces of second and third-class mail—a total of eight hundred and sixty-four million seven hundred thousand (864,700,000) pieces.

CIVIL SERVICE.

The statement of work performed and errors reported shows a great improvement over the past year.

Since the adoption in this service of a system of examination and checks there has been a steady increase in the efficiency of the employés.

During the year the record of each man has been obtained, and if he did not pass a satisfactory examination upon the actual distribution which he was required to perform upon the cars, he was called upon to resign. Some of the examinations are highly creditable. As the examinations cover the actual work each man is called upon to perform, the most hypercritical cannot object to being subject to it, and, if retired from the service on account of inefficiency, cannot complain. The only objection that can be raised to such examination is that success depends upon the memory. Occasionally, a clerk will pass a good ex-

amination, but make a very poor distribution. This, however, is corrected by the system of slips explained above, by which all errors made are recorded.

The system adopted during this fiscal year of making all appointments for a probationary period of six months, at the end of which they absolutely expire, and only reappointing an employé on condition that his record is good and he has shown that he is an efficient clerk, has proven a success. Each clerk recognizes at once that his record will be closely scrutinized, and takes especial pains to make himself proficient, in order that he may not fail of reappointment.

I think it is safe to say that there is in operation in this branch of government service the most perfect "civil service" that has been or can be adopted. Each employé understands that it is upon his record only that he can be retained in the service. That record is made up from the daily record of work performed.

There is no possible way of evading or influencing the result after the work has passed out of his hands, and the result is increased efficiency each year.

RAILROAD-SERVICE.

Under date of July 14, 1876, the executive officers of the railroad companies over which the department had established the "fast" and "limited" mail-service, gave notice that on and after July 22 service would be discontinued on their lines.

The fast and limited mail-service was regular railway post-office service, run over the New York Central and Lake Shore Railroads once each way daily on special trains, and the other trips on regular passenger-trains, and over the Pennsylvania Railroad run, except one trip each way daily between Philadelphia and Trenton, on regular passenger-trains, the department, however, controlling to a great extent the arrangement of schedules and the choice of trains.

Prior to the establishment of this service there was double daily railway post office service on the New York Central and Hudson River Railroad, and all the service on the Lake Shore and Michigan Southern Railroad that was desired; single daily railway post-office on the Pennsylvania Railroad to Pittsburgh, Pa., but none west on the connecting lines.

When the service was discontinued July 22, the New York Central and Hudson River Railroad would only furnish single daily railway post-office service on their line to Buffalo, N. Y., and double daily service of an inferior grade on the Lake Shore and Michigan Southern Railroad.

On the Pennsylvania Railroad the old service was restored.

Negotiations were immediately commenced with both these railroad companies, which were pushed as vigorously as possible during the ensuing months, and finally resulted in the Pennsylvania Railroad tendering ample and complete accommodations for railway post-office and other mail service. The new service was commenced December 12, 1876, and has been since improved as fast as the company could build the necessary equipment, nearly all of which was required to be new.

The Lake Shore and Michigan Southern Railroad also consented to place any facilities in their power at the disposal of the department, and very complete service was placed on the road on January 1 of this year.

The New York Central and Hudson River Railroad, however, have steadily refused to grant any facilities at all commensurate with the weight of mails passing over their road, or the character of country through which the road runs. There is but one service each way daily

by railway post-office car. The mails are carried on only such trains as the company will permit, and then only in case there is sufficient room in the baggage-cars after the regular baggage is loaded.

Such service as this cannot and does not meet the requirements of the public.

Negotiations were commenced the early part of the fiscal year with a view of placing additional railway post-office service on the lines out of Boston, Mass., Chicago, Ill., and Saint Louis, Mo.

The discontinuance of the railway post-office service on the trunk-lines made the necessity of this more apparent, and during the fall and winter months additional service was placed on the leading lines out of Chicago, Ill., and Saint Louis, Mo., and on the Hoosac Tunnel line between Boston, Mass., and Troy, N. Y.

Owing to the small appropriation for railway post-office clerks, the full advantage of this increased service has not as yet been realized.

Negotiations have also been carried on with a view to obtaining from the joint lines between Boston, Mass., and Albany, N. Y., and New York, N. Y., via Springfield, Mass., better postal-car accommodations, but as yet without particular success, although the prospect is now encouraging.

COMPENSATION FOR MAIL-TRANSPORTATION.

The experience of this fiscal year can but impress upon the department and Congress the necessity of some change in the law regarding the transportation of mails upon railroads, so that the department can control proper facilities for the same. It is not likely that any railroad will absolutely refuse to carry mails, but the use of certain trains has been repeatedly refused by several of the large companies, and it has also been absolutely impossible to obtain sufficient facilities from one of the largest trunk-lines for the proper performance of the work local to the line.

In most cases, however, the companies have shown a disposition to afford the department such facilities as were necessary until the report of the special commission on railway mail-transportation could be made and acted upon.

The appropriation for mail-transportation is nearly, if not quite, sufficient to obtain all the accommodation the department needs, unless it be increased speed. The fault lies in the method of compensation. The basis should be the accommodations afforded, and each separate accommodation should be paid for and be a distinct factor in the aggregate.

Under the present law the payment for weight is greatly excessive if the mail is carried in bulk only, while the payment for car-space is greatly deficient where long postal cars are provided. It is vastly more profitable to carry the mails in bulk, stowed away with baggage. It is therefore to be expected that the companies will not furnish car-space sufficient for the proper distribution unless there be some other and greater inducement than that now afforded by the schedule of payment for postal cars.

As the department can by a simple and practicable change in the present law be placed in an attitude where it can negotiate and command, rather than coax and beg, and this, too, without a material increase in the expenses of mail-transportation, it seems but reasonable to ask that it be done.

Through Philadelphia and Albany passes an average of over eighty tons of mails daily, or 50 per cent. of all the mail originating daily in the United States. At the option of a railroad company, this matter can be, and has been shown is, delayed in reaching its destina-

tion. You may have the most perfect possible connecting and lateral service, but this delay cannot be avoided unless there is some way provided for obtaining such facilities as the department requires from any and all companies.

The department should be clothed with absolute power to demand of, and obtain from, any and all railroads, not only that mail be carried upon any regular train which it may select, but that sufficient accommodations should be afforded to enable the employés of this department to make the necessary distribution while in transit.

In the United States, the average distance which mail is carried being so much greater than in any other country, and consequently so much time consumed in transit, it should not be more delayed by forcing it into terminal or "distributing post-offices" for distribution to connecting lines, when it can be done upon the railroad, and be ready upon arrival at any point for dispatch upon connecting trains.

Another feature which, though not expressly commanded by law, yet is by custom ingrafted upon the carriage of mails by railroads from the practice which obtained where mails were almost entirely conveyed by coaches, is that of compelling the railroad to go with the mails to all post-offices within eighty rods of their line. The transportation of mails upon railroads should end and begin at the station, including, however, all transfers at common depots. As it is now, the mail at the greater number of post-offices is carried by persons who acknowledge no fealty to the department, who at the time of the arrival of the mails have their entire attention occupied with business consequent upon the arrival and departure of trains at and from the stations; the mails are thrown one side until all other business is finished before being attended to. The mails are thus exposed to all sorts of irregularities, for which, in most cases, the department has no remedy, the person whose duty it is to attend to them not being an employé of the department, while the railroad companies, doing this messenger service in most cases under protest, will not co-operate in correcting the irregularities.

ESSENTIAL FEATURES OF A LAW GOVERNING COMPENSATION FOR MAIL TRANSPORTATION.

The essential elements of a bill to regulate the compensation to railroad companies for the transportation of the mails are—

First. Payment in proportion to the service performed—increasing with increase of service; decreasing with decrease of service; recognizing frequency, quality, and efficiency of the service.

Second. Confining the service performed by the railroad companies strictly to the transportation of the mails on railroads.

Third. Making it, if possible, obligatory upon the part of the railroad to give the mails the full advantage of all their facilities.

RAPID TRANSPORTATION.

The "fast" and "limited" mail-service which was in operation at the commencement of the fiscal year, but which was discontinued during July, afforded the public the greatest possible accommodation. By it the delivery of the great bulk of the correspondence was greatly advanced. It enabled the dispatch of mails at the great commercial centers for the distant sections of the country to be held to a much later hour, affording the public the advantage of the time before consumed in transit. It delivered the mail at destination at an earlier and more seasonable hours, and increased the regularity and punctuality of the delivery of the mails.

As the postal cars are now attached to overloaded passenger trains,

it is impossible to make schedule time, and the consequence is, connections are frequently missed, which, in most sections, involves a delay of from twelve to twenty-four hours.

This could be entirely overcome by running railway post-office trains between Boston, New York, Chicago, Saint Louis, Cincinnati, and Washington, where the bulk of mails is sufficient to warrant it, (to which passenger accommodations might be attached within certain limits,) connecting at those points with trains run upon the best schedules the department could obtain for the compensation that the bulk and importance of the mails would warrant.

TABLE F.—*Casualties in the railway mail service from July* 1, 1876, *to July* 1, 1877.

1876.

July 31.—Mail-train collided with a freight-train near Manassas, on the Virginia Midland Railroad, and Route Agent John C. Clark received severe injuries about the head and arms, which incapacitated him for duty for about three weeks.

August 22.—Jacob Roos, head clerk Chicago and Cincinnati railway post-office, while passing through train, slipped and fell under the cars, two of which passed over his left arm, rendering amputation necessary; he also had two ribs broken and was otherwise internally injured.

28.—Mail-train on Cairo and New Orleans Railroad ran into a washed culvert near Tongaloo, wrecking mail and baggage cars and two coaches. Mail-car thrown down embankment, and W. T. Tinkle, head clerk, slightly injured. Mail-matter not in pouches damaged by water.

September 3.—Mail train between Baltimore and Grafton, when near Harper's Ferry, W. Va., ran into some freight-cars which were off the track. The postal-car was thrown over the express-car, tender, and engine, and into the Chesapeake and Ohio Canal, and completely wrecked. Postal Clerks A. F. Rittenhouse and G. W. Waite were severely injured. No mail lost.

September 8.—New York and Washington through line, a package of newspapers damaged by fire caused by a spark from the locomotive.

September 12.—Mail-train New York to Washington, when near Torresdale, Pa., collided with freight-train, completely demolishing the postal car and scattering the mail along track for about a mile; no mail reported lost. Clem R. James, chief head clerk, was thrown out with great force, and received injuries from the effects of which he died September 20 following.

September 12.—Postal car on Danville and Charlotte Railroad ran off the track, and William Ira Eddins, route-agent, was seriously injured.

September 14.—C. M. Black, postal clerk, Lafayette and Quincy railway post-office, was slightly injured while catching mails.

October 11.—Lake Shore and Michigan Southern Railroad, between Toledo and Bryan, Ohio, two sacks paper-mail almost totally destroyed by fire, caused by a spark from the engine. The mail being in a through baggage-car, the fire gained considerable headway before being discovered.

December 6.—Mail-boat with mail for Escanaba left Fayette, Delta County, Michigan, December 6, 1876, and as nothing more was ever heard from boat or boatmen, it is believed she went down, with all on board, during a severe storm. Mails small; two lives supposed to have been lost.

December 7.—Accident on the Vicksburgh and Meridian route, caused by a broken rail, by which Thomas W. Lindsey, route-agent, was slightly injured.

December 20.—Mail-train on Kansas City (Mo.) and Denver (Colo.) Railroad, when near Ellis, Kans., went through a bridge into the dry creek-bed below; took fire, and the mail-car and contents were entirely destroyed. D. L. Crandell, route-agent, was seriously bruised and burned. The mail lost was 28 registered packages, one No. 2 pouch, letter-mail, and 4 tie-sacks paper-mail.

December 22.—Mail-car on Pottsville, Tamaqua and Herndon (Pa.) route, near Locust Gap, Pa., was thrown from track and completely demolished, and, taking fire from the overturned stove, a portion of the mail was destroyed. Charles Shelley, route-agent, slightly injured.

December 29.—Lake Shore and Michigan Southern Railroad: the No. 5 Pacific Express, consisting of 2 engines, 4 baggage and express, and 7 passenger cars, upon arriving at Ashtabula, (and by reason of the bridge giving way,) was, with the exception of one engine, precipitated into the river below, where the wreck took fire and a great number of persons were killed and injured. No postal car or clerks on train, but about 8,000 pounds of mail was totally destroyed.

December 29.—New York and Montreal: night express from Montreal went through bridge near Pittsford; no mail lost, and no one seriously injured.

1877.

January 8.—Vermont Central Railroad, Rutland and Burlington division: mail car thrown from track. J. W. Snow, route-agent, seriously injured by stove falling upon him.

January 15.—John C. Thomas, postal clerk, New York and Buffalo, in attempting to board train (while in motion) at Syracuse, N. Y., was thrown under the cars, and received injuries from effects of which he died the same night.

January 18.—James N. Murdock, route-agent Richmond and Charlotte Railroad, while stepping from train on a broken platform at Richmond, Va., seriously injured his ankle.

January 20.—Southern Minnesota Railroad: mail-car thrown off the track, near Ramsey, and rolled down an embankment and caught fire. Small amount of paper-mail burned.

March 9.—Lake Shore and Michigan Southern Railroad: train No. 4, leaving Chicago, when near Sedan, collided with a freight-train; tender and baggage-car telescoped into the postal car, which immediately took fire, and car and contents (including registered matter) were entirely destroyed. Among the registers was a box, said to contain 25 rouleaux of gold, mailed by Donahue, Kelly & Co., San Francisco, Cal., to Eugene Kelly & Co., New York City; about 80 pounds of this, more or less melted, was saved from the wreck and delivered to Kelly & Co., through Postmaster T. L. James, of New York, N. Y.

April 26.—Bridge gave way near Easton, on the Maryland and Delaware Railroad, throwing engine and mail-car down embankment; no mail lost, nor injuries reported.

June 1. Lynchburg and Bristol Railway post-office: when near Bangs Station, the roof of mail-car was discovered to be on fire. No mail burned, but all was more or less injured by water.

June 1. Columbus and Athens Railroad: trains wrecked by washing out of culvert, and W. H. H. Minturn, route-agent, was seriously injured.

June 2. Lehigh Valley Railroad: mail-train thrown from track, between Laceyville and Wyalusing, and mail-car thrown over on its side. No mail lost, but one sack paper-mail slightly damaged by water from the cooler. No injuries reported.

June 9. Thomas Morrow, route-agent, Pittsburgh and Altoona, got aboard Cincinnati express at Union depot, Pittsburgh, mistaking it for his own train, and upon discovering his error, when near Birmingham, he jumped from the train while it was in motion and received very serious injuries.

June 19. Train on Chicago and Southwestern Railroad went through bridge near Brighton, Iowa. No personal injuries reported, but all the mail was more or less damaged by water and grease.

June 26. New York and Pittsburgh: train when near Cave Station was struck by a tornado. The side door of postal car was torn from its hinges and the car flooded and almost upset; four or five letters were blown from the car, but no other mail was lost or damaged.

FIRE.

I would respectfully recommend that some further provision be made to guard against fire in the postal cars.

As will be seen in the report of casualties, Exhibit F, the mails have severely suffered during the fiscal year from this cause, and there was no case where the loss could not have been avoided had some simple precautionary measures been taken.

In the accident on the Lake Shore Road at Sedan, Ind., the entire mail from the West to the East was destroyed, resulting in untold confusion and inconvenience to the public, and the destruction of registered mail to the value of between seventy-five thousand ($75,000) dollars and one hundred thousand ($100,000) dollars.

A plan has been submitted, which appears feasible, of placing a gas fire-extinguisher (charged ready for use) in the bottom of the car so as to be reached from either inside or outside. By this means, in case an accident occurred resulting in fire, an immediate application could be made.

In every case of destruction by fire, which has come within my knowledge, this or a similar device could have been utilized.

As most of these fires have been ignited by the lamps used on the train, one of the first steps to be taken would be to ascertain whether some method of lighting could not be adopted which would reduce this liability, and at the same time afford the requisite light.

My former recommendation, that an expenditure for this purpose not exceeding five hundred ($500) dollars, is renewed.

UNIFORMS.

As many of the mails are necessarily exposed to the public while in transit between post-offices and stations, and being transferred at stations, it seems very necessary that all the protection possible should be thrown around them.

The adoption of closed wagons in the large cities has worked satisfactorily.

As mails, while being transferred, are more or less exposed to depredation, it has been recommended that all employés of this service who, in the discharge of their duties, are required to handle the mails in public, be required to wear some uniform dress, that it may be known whether or not persons in possession of the same are properly authorized.

I would therefore respectfully recommend that Congress be asked to authorize such uniform, and attach a penalty to its use by unauthorized persons.

Very respectfully,

THEO. N. VAIL, *Gen. Sup't.*

HON. THOS. J. BRADY, *Second Ass't P. M. G.*

POST-OFFICE DEPARTMENT,
OFFICE OF THIRD ASSISTANT POSTMASTER-GENERAL,
Washington, D. C., Nov. 1, 1877.

SIR: I have the honor to submit the following as my report of the operations of this office for the fiscal year ending June 30, 1877, and to call your attention to the subjoined tables, numbered from 1 to 17, which form part of the same, viz:

No. 1. Estimates of the expenditures and revenues of the Post-Office Department for the fiscal year ending June 30, 1879, with explanatory papers, marked No. 1 *a* to No. 1 *g*.

No. 2. Estimate of the indebtedness of the department for the past two fiscal years, (not yet adjusted.)

No. 3. Receipts and expenditures for the fiscal year ending June 30, 1877, compared with the two preceding years.

No. 4. Receipts and disbursements on account of the Post-Office Department at treasury depositories.

No. 5. Receipts and disbursements at post-office depositories.

Nos. 6 and 7. Number and value of postage-stamps, stamped envelopes, newspaper-wrappers, and postal cards issued during the year.

No. 8. Number and value of official postage-stamps, stamped envelopes, and wrappers furnished the several executive departments during the year.

No. 9. Statement showing increase or decrease in issues of postage-stamps, stamped envelopes, newspaper-wrappers, and postal cards of all kinds during the year.

No. 10. Statement of amount of dead mail-matter treated in the division of dead letters during the year.

No. 11. Statement showing the number, classification, and disposition of unmailable letters received in the division of dead letters during the year.

No. 12. Statement showing detailed classification and disposition of letters containing valuable inclosures received in the division of dead letters during the year.

No. 13. Statement showing the number of foreign letters received and treated in the division of dead letters during the year.

No. 14. Statement showing the number, classification, and disposition of dead registered letters in the division of dead letters during the year.

No. 15. Statement of the number of registered letters transmitted from each State and Territory during the year.

No. 16. Statement showing the operations of the registered-letter system at the cities of New York and Chicago during the year.

No. 17. Statement showing the number and value of registered packages forwarded during the year for the Post-Office and Treasury Departments.

ESTIMATES.

A detailed explanation of the estimates of appropriations required for the service of this office during the coming fiscal year will be found among the papers accompanying the table (No. 1) of estimates attached to this report. The list of estimates embraces ten items, principally for the manufacture of postage-stamps, stamped envelopes, and postal cards, and aggregates $905,000—a decrease of $246,150, or 21.3 per cent., from the appropriations for the current year, notwithstanding that there is

an estimated increase of issues of 10 per cent. in postage-stamps, 12 per cent. in stamped envelopes, and 20 per cent. in postal cards. This decrease in the amount of the estimates is due to exceedingly advantageous contracts recently entered into for the manufacture of postage-stamps and postal cards.

The cost of manufacturing stamped envelopes is by law refunded to the department when the envelopes are sold to the public; and deducting the amount estimated for this item, with those for the stamped-envelope agency, and for ship, steamboat, and way letters, also refunded, leaves the estimated net cost to the revenues for maintaining the service of this office at $335,000.

OPERATIONS OF THE BUREAU.

The work of this office is distributed among the divisions of finance, of stamps, stamped envelopes and postal cards, of dead letters, of registration, and of files, records, and mails, details of the operations of which are presented in the following statements:

DIVISION OF FINANCE.

The receipts and expenditures of the department during the fiscal year ended June 30, 1877, as shown by the books of this division, were as follows:

Receipts.

Letter-postage, paid in money	$241,358 26
Box rents and branch offices	1,321,968 08
Fines and penalties	7,541 62
Postage-stamps, stamped envelopes, newspaper-wrappers, and postal cards	25,757,515 76
Dead letters	4,945 50
Revenue from money-order business	109,148 01
Revenue from money-order business, international, June 30, 1875	63,261 84
Miscellaneous	25,846 19
Total	27,531,585 26
The item of revenue from money-order business, international, ($63,261.84.) properly belongs to the receipts for 1875, and if deducted from above total would make the actual receipts for the last fiscal year	$27,468,323 42
The total expenditures for the year were	32,322,504 24
An excess over the receipts appertaining to, and for, the last fiscal year of	4,854,180 82

The total receipts for the year were $1,112,612.24 (or 4.0+ per cent.) less than those of the preceding year, and $1,126,618.54 (or 4.0+ per cent.) less than the estimates therefor.

The decrease is due largely to the reduction in receipts for official postage-stamps, the amount derived from that source during the last fiscal year being only $370,730.47 against $1,281,389.43 for the previous year. Excluding official postage-stamps and money-order receipts from both fiscal years, the reduction in ordinary receipts was only $183,592.29, or about three-fifths of one per cent.

As explained by note appended to the summary of receipts and expenditures in the report of the Auditor for the Post-Office Department for the last fiscal year, the appropriation for official postage-stamps for this department was not available as revenue, because of the terms of the act making the appropriation; and, accordingly, the amount of such

stamps used by the department during the last fiscal year ($656,095.50) does not appear either in the aggregate receipts or in the receipts from official postage-stamps.

Table No. 3, which accompanies this report, shows the receipts and expenditures by fiscal quarters, and the increase or decrease as compared with previous years.

In addition to the receipts stated above, there was realized on grants from the treasury, on account of special and deficiency appropriations, the sum of $7,013,300, making the total amount received from all sources $34,544,885.26, an excess over the expenditures of $1,058,562.82.

The estimated expenditures for the fiscal year ending June 30, 1879, are	$36,427,771 00
The estimated revenue for the same year is	29,034,098 28
Leaving a deficiency to be appropriated out of the general treasury of	7,393,672 72

Table No. 1, accompanying this report, furnishes the estimates in detail.

Of the appropriations for deficiencies, undrawn and unexpended, on the 30th June, 1876, there was the sum of $10,771,960.75.

The unexpended balances for 1873 and 1874 having been carried to the surplus fund June 30, 1877, there remained on that date, undrawn and available, a total of	$9,084,556 13
During the year there was drawn the sum of	6,700,000 00
Leaving for payment of indebtedness to June 30, 1877	2,384,556 13
Against above amount there is chargeable for mail-service not yet adjusted, the sum of (estimated)	645,073 46
Leaving a net balance of deficiency appropriations of	1,739,482 67

A detailed statement of unadjusted liabilities will be found in Table No. 2.

The receipts and disbursements at treasury and post-office depositories during the last fiscal year may be briefly summarized thus:

At treasury depositories:	
Balance subject to draft June 30, 1876	$866,175 69
Aggregate receipts during the year ended June 30, 1877	11,317,719 24
Total	12,183,894 93
Amount of warrants paid during year	11,103,783 61
Balance subject to draft June 30, 1877	1,080,111 32

Transactions at these depositories, in detail, with amount of increase or decrease, as compared with previous years, are shown in Table No. 4, accompanying this report.

At post-office depositories:	
Balance subject to draft June 30, 1876	$321,947 66
Aggregate receipts during the year ended June 30, 1877	3,223,614 20
	3,545,561 86
Less amount of credit balances for 1876, paid during the last fiscal year	4,372 94
Total	3,541,188 92
Disbursements during the year	3,161,923 62
Amount subject to draft June 30, 1877	379,265 30

Table No. 5, submitted with this report, exhibits the receipts and disbursements at the different post-office depositories in detail.

During the year there were 4,113 contracts for mail-service received

from the Second Assistant Postmaster-General, and 7,252 orders of the Postmaster-General, recognizing mail-service not under contract, curtailing or extending service or modifying previous orders, being an increase of 302 contracts and a decrease of 1,060 orders, as compared with the previous year. These contracts and orders were entered upon the books of the division, for reference when passing upon reports from the Auditor for the payment of mail-contractors and other creditors of the department. The number of such reports received and adjusted during the year was 30,154, a decrease of 2,696 from the previous year.

Accounts were kept with the treasury, 9 sub treasuries, and 35 designated depositories, involving the sum of $11,317,719.24, against which 12,593 warrants were issued.

Accounts were also kept with 100 post-office depositories, involving the sum of $3,323,614.20, of which $2,661,480.56 arose from the proceeds of the depository offices themselves; $408,839.74 from deposits (on 8,476 certificates) by other offices; and $153,293.90 from collection drafts. Against the accumulations in the depository offices, 17,561 drafts were issued. In addition to the amount paid out by draft, the sum of $1,321,851.21 was paid to route-agents, railway post-office clerks, mail-messengers, and letter-carriers by the postmasters authorized to make such payments, the accounts for which were rendered monthly to this office.

Upon the deposit desk of this division a record of 3,053 depositing offices was kept, showing that 9,832 certificates of deposit were received and entered, 6,700 circulars of instruction and 896 Auditor's statements of account forwarded to postmasters, and 2,300 letters from postmasters relative to balances due were received, noted upon the books, and properly referred or answered.

DIVISION OF POSTAGE-STAMPS, ENVELOPES, AND POSTAL CARDS.

During the year, through the agency of this division, there were issued to postmasters for sale to the public ordinary postage-stamps to the number of 689,580,670, and of the value of $18,181,676; of newspaper and periodical stamps, 1,388,709, valued at $1,000,605.10; of ordinary stamped envelopes, plain, 84,285,700, valued at $2,281,574.11; of stamped envelopes bearing a return-request, 64,374,500, valued at $2,069,995.65; of newspaper-wrappers, 21,991,250, valued at $265,362; of postal cards, 170,015,500, valued at $1,700,155; of official postage-stamps issued to Executive Departments for official use, 13,867,145, valued at $614,107.20; and of official stamped envelopes and wrappers, 14,750,445, valued at $412,361.41; making a total number of 1,060,253,919, and a total value of $26,525,836.47.

These figures show the following differences from the values of the same articles issued during the previous year: There has been an increase in the value of newspaper and periodical stamps issued of $55,350.35, or 5.85 per cent.; of ordinary stamped envelopes, $1,255.37, or 0.05 per cent.; and of postal cards, $192,005, or 12.73 per cent. There has been a decrease in the issues of ordinary stamps of $591,778, or 3.15 per cent.; of special-request stamped envelopes, $9,582.65, or 0.46 per cent.; of newspaper-wrappers, $8,361.50, or 3.05 per cent.; of official stamps, $49,724.30, or 7.49 per cent.; and of official stamped envelopes and wrappers, $16,749.52, or 3.9 per cent. In the value of all the ordinary issues there was a decrease of $361,111.43, or 1.39 per cent.; in the value of the ordinary and official issues combined there was a

decrease of $427,585.25, or 1.58 per cent. This is the only instance within the last ten years of a falling off in the general issues.

Additional to the above, there were issued during the year 5,137,000 registered-package envelopes, 9,829,200 post-office (unstamped) envelopes, and 344,500 dead-letter envelopes, making a total of 15,310,700.

In sending out the foregoing supplies, the following number of requisitions was filled:

For ordinary postage-stamps	103,829
For newspaper and periodical stamps	8,204
For official postage stamps	37,911
For ordinary stamped envelopes and wrappers, (plain)	51,504
For special-request stamped envelopes	55,865
For official stamped envelopes	3,155
For postal cards	47,322
For registered-package envelopes	42,268
For post-office envelopes	40,150
Making a total of	390,208

In the following table a comparison is made with the operations of the division in the same particulars during the preceding fiscal year:

Articles.	Requisitions filled in 1877.	Requisitions filled in 1876.	Increase.	Decrease.
Ordinary stamps	103,829	104,037		208
Newspaper and periodical stamps	8,204	7,212	992	
Official stamps	37,911	39,035		1,124
Ordinary stamped envelopes	51,504	49,969	1,535	
Special-request envelopes	55,865	66,190		10,325
Official stamped envelopes	3,155	3,059	96	
Postal cards	47,322	43,103	4,219	
Registered-package envelopes	42,268	41,640	628	
Post-office envelopes	40,150	39,685	285	
Total	390,208	394,110	7,755	11,657
Net decrease, (nearly 1 per cent.)				3,902

The number of packages of ordinary stamps forwarded was	107,305
Of newspaper and periodical stamps	8,209
Of official stamps	38,077
Of ordinary stamped envelopes and wrappers	72,875
Of special-request stamped envelopes	52,043
Of official stamped envelopes	7,075
Of postal cards	58,058
Of registered-package envelopes	42,818
Of post-office envelopes	40,780
An aggregate of	427,240

The following is a comparison between the number of packages sent out during the year with the number sent during the year preceding:

Articles.	Number of packages sent in 1877.	Number of packages sent in 1876.	Increase.
Ordinary stamps	107,305	105,343	1,962
Newspaper and periodical stamps	8,209	7,093	1,116
Official stamps	38,077	38,711	*434
Ordinary stamped envelopes	72,875	69,019	3,856
Special-request envelopes	52,043	51,500	543
Official stamped envelopes	7,075	6,886	189
Postal cards	58,058	53,231	4,827
Registered-package envelopes	42,818	42,440	378
Post-office envelopes	40,780	40,436	344
Total	427,240	414,659	12,581
Percentage of net increase			3.0

*Decrease.

Out of the above very large number of packages transmitted but two were lost—one package of postage stamps, valued at $74, and the other a package of stamped envelopes, valued at $8.15—the amount of which is probably the smallest loss that has ever occurred before in one year.

The system of collecting postage in advance on newspapers and periodicals mailed from their offices of publication to regular subscribers, under the act of Congress approved June 23, 1874, still exhibits its advantages over the system formerly in operation. Over 14,000 quarterly returns, covering collections of this particular class of postage, have been made during the year by postmasters at 3,576 offices, which returns, after being carefully audited, have been entered upon the books of the division. The amount of this postage is as follows:

On 40,865,246 pounds of matter, at 2 cents per pound	$817,304 92
On 6,913,808 pounds of matter, at 3 cents per pound	207,414 24
Total	1,024,719 16

This shows an increase over the amount collected during the preceding year of $10,564.89, or 1.04 per cent. Of the total amount it will be seen from the subjoined table that more than half was collected at only six post-offices:

Offices.	Pounds of newspaper and periodical matter.	Amount of postage on same.
New York, N. Y	15,397,438	$338,029 62
Chicago, Ill	3,653,202	77,915 81
Boston, Mass	3,082,255	66,412 40
Philadelphia Pa	2,175,112	52,643 84
Saint Louis, Mo	2,093,503	43,797 72
Cincinnati, Ohio	1,869,110	39,724 86
Total	28,270,620	618,524 25

From the decrease in the number of requisitions filled during the year, as before stated, (though such decrease is but trivial,) it must not be assumed that the labors of this division have been reduced. This is far from being the case. They have, on the contrary, been very largely increased, not by the usual and legitimate augmentation of business, but by the instrumentality of an evil which sprang into existence several years since, and which has already grown to dangerous proportions. I allude to the practice among postmasters at fourth-class offices of selling stamps and stamped envelopes to persons outside of their respective deliveries, and of using them as the medium for private traffic, or for the discharge of private obligations, with a view to increasing their compensation under the present law regulating salaries. Under ordinary circumstances it has been heretofore customary to examine carefully every requisition for these articles, in the endeavor to prevent excessive supplies, and to confine them within an amount proportional to the postmaster's bonded obligations; but since the passage of the law referred to, and especially during the past year, so inordinate in amount have these requisitions been, that a still greater degree of vigilance has of necessity been exercised. The largest amount of time and labor possible with the present force of the division, or compatible with its prompt performance of other necessary duties, has thus been bestowed

in efforts to check the increasing delinquencies of postmasters in this matter.

Further on in this report will be found statements to show why the present system of compensating postmasters, under which these delinquencies occur, should be abolished.

DIVISION OF DEAD LETTERS.

The whole number of letters received and treated during the year in this division was 3,288,290, a reduction from last year's receipts of 296,454, or over 8 per cent., which may be explained by the general depression of business, (causing less commercial correspondence,) and the greater efficiency of the delivery service.

The decrease in the number of letters without inclosures returned to their writers, is accounted for by the reduced appropriation which necessitated the discharge of ten of the clerks engaged on that work. At its last session, however, Congress provided for the restoration of seven of these clerks from the beginning of the next fiscal year, and the number of this class of letters returned will therefore be proportionately increased.

Owing to the improved system of exchange of unclaimed foreign correspondence under the union postal treaty of Berne, I am gratified to be able to furnish with this report a table (No. 13) showing not only the whole number of foreign letters returned to the country of origin, but the exact number returned to each.

The present system of treating held-for-postage letters (notifying the persons addressed, and holding the letters thirty days subject to their order and a remittance of the amount due) was introduced in April, 1865, and another year's experience has not developed any sufficient reason for its change, although it will always provoke some hostility on the part of persons who feel the inconvenience of its operation, while they do not appreciate the necessity for its continuance.

The whole number of applications for missing correspondence during the year was 9,109, and in 3,477 of these cases the letters or packages were restored.

The amount of money deposited in the treasury from letters which could not be restored to the owners was $4,754.

I would repeat the recommendation twice made by my predecessor, that some means be adopted whereby the whole number of letters mailed in this country annually may be approximately ascertained.

Owing to the want of space, the dead-letter museum has been abolished. It is a subject for regret that this display, which was the chief object of interest to visitors to the department, could not have been preserved.

For detailed statement of the work done in this division, you are referred to Tables Nos. 10, 11, 12, 13, and 14, submitted herewith.

DIVISION OF REGISTERED LETTERS.

Table No. 15, accompanying this report, exhibits a statement by quarters of the number of registered letters mailed and the amount of fees collected thereon, in each of the several States and Territories during the last fiscal year. It will be observed that the total number of letters and packages registered was 4,348,127, of which 673,739 were forwarded without registry fee; and of the remainder, on which fees were collected, 3,528,480 were domestic and 145,908 addressed to foreign countries. The amount of fees (exclusive of postage) collected was $367,438.80, being an

increase over the previous year of $32,022.20, or nearly 11 per cent. The increase in number was 340,310, or 8½ per cent.

In Table No. 16 will be found a statement of business performed in connection with this branch of the service at two of the principal offices of the country, New York and Chicago, the former of which handled 1,639,231, and the latter 608,392 letters, packages, and pouches for mailing, delivery, and in transit.

The losses during the year were unusually small. Omitting those occasioned by the accidental burning of a postal car at Sedan, Ind., on the 7th of March last, (the extent and character of which have not yet been fully ascertained by reason of the destruction of the accompanying records,) the number of packages actually lost was only 899, say one out of 4,830, or about one-fiftieth of 1 per cent. of the entire number forwarded.

Table No. 17, showing the number and value of packages transmitted for the Post-Office and Treasury Departments, is worthy of special examination, as affording evidence of the great efficiency of the registry service.

It will be observed that the number of packages of postage-stamps, stamped envelopes, and postal cards forwarded was 343,642, valued at $26,525,836.47; and of United States bonds, currency, and internal-revenue stamps, 31,811, valued at $124,147,040.54. The losses in these large transactions were confined to one package of postage-stamps, valued at $74, and one of stamped envelopes, valued at $8.15—a total loss of only two packages, valued at $82.15, out of 375,453 packages, valued at $150,677,877.01. Of the $124,147,040.54 carried for the Treasury Department not a single penny was lost. Certainly no argument is needed, beyond the presentation of these facts, to demonstrate the security of the registry system as a means of conveyance for valuable matter.

The system is in operation at all post-offices, and its advantages are therefore extended to every individual in the country.

I may be justified in quoting briefly from the postmaster at New York City, who uses the following language in his report of the operations of the registry branch of his office for the last fiscal year, viz:

"Despite the great increase in the registered matter handled, the extra labor involved through the through-registered-pouch system and the postal convention of Berne, all registered matter has been treated with accuracy and dispatch, and of 1,639,231 packages, pouches, and letters handled in this office during the year not a single one has been lost in this office, and a perfect record exists of each and every one, affording quick reference and a thorough report, as to receipt or disposal, in any instance when desired.

"Nearly half a million registered letters were delivered in this city during the year, and there were registered at the general post-office and stations 180,768. The statistics of this and previous years show that the increase is steady, and there is no diminution in the confidence of the public in this branch of the service. I find that the number of registered letters handled in this office has more than doubled within the past five years, averaging 20 per cent. yearly increase.

"The amount of value passing through the registered mails is fabulous, and if it were possible to compute it, the result would be almost beyond belief. Packages of 'greenbacks' are sent, of various amounts, and in one instance one package delivered in this city contained $500,000 in United States bank-notes, and, as was stated in evidence before the Senatorial committee in December last, forty-three packages, containing $8,600,000 in bonds, were sent by a banking-house in this city to a foreign

bank by one steamship mail, being mailed the night before sailing, and therefore remaining in this office over night."

The through-pouch system inaugurated by my predecessor, and fully and clearly explained in his report for the fiscal year ending June 30, 1876, has justified the most sanguine expectations formed of it, and its further extension cannot fail to result beneficially to the service.

The following is a list of the through-registered-pouch offices in the United States, together with the offices with which they exchange through pouches daily, viz:

Albany, N. Y., exchanges with Boston and New York.

Augusta, Ga., exchanges with New York.

Boston, Mass., exchanges with New York, Philadelphia, Portland, Washington, Chicago, Cincinnati, Saint Louis, Albany, and Buffalo.

Bangor, Me., exchanges with Portland.

Buffalo, N. Y., exchanges with Boston and New York.

Cleveland, Ohio, exchanges with New York.

Chicago, Ill., exchanges with Boston, Philadelphia, New York, Washington, San Francisco, Cincinnati, Saint Louis, Detroit, Saint Paul, and Sacramento.

Cincinnati, Ohio, exchanges with Boston, Philadelphia, New York, Washington, Saint Louis, Chicago, New Orleans, Louisville, and Nashville.

Detroit, Mich., exchanges with Chicago and New York.

Galveston, Tex., exchanges with New Orleans and Houston.

Houston, Tex., exchanges with Saint Louis and Galveston.

Indianapolis, Ind., exchanges with New York.

Kansas City, Mo., exchanges with Saint Louis.

Louisville, Ky., exchanges with Cincinnati.

Nashville, Tenn., exchanges with Cincinnati.

New Orleans, La., exchanges with Boston, New York, Philadelphia, Cincinnati, Saint Louis, and Galveston.

New York, N. Y., exchanges with Boston, Philadelphia, Washington, Chicago, San Francisco, Saint Louis, Cincinnati, Albany, Buffalo, Indianapolis, Detroit, Cleveland, Augusta, Pittsburgh, Richmond, Savannah, and Portland.

Philadelphia, Pa., exchanges with Boston, New York, Washington, Chicago, Cincinnati, and Saint Louis.

Pittsburgh, Pa., exchanges with New York.

Portland, Me., exchanges with Boston, Bangor, and New York.

Richmond, Va., exchanges with New York.

San Francisco, Cal., exchanges with Chicago and New York.

Sacramento, Cal., exchanges with Chicago.

Savannah, Ga., exchanges with New York.

Saint Louis, Mo., exchanges with Boston, New York, Philadelphia, Chicago, Cincinnati, New Orleans, Houston, Kansas City, and Texarkana.

Saint Paul, Minn., exchanges with Chicago.

Texarkana, Ark., exchanges with Saint Louis.

Washington, D. C., exchanges with Boston, New York, Philadelphia, Chicago, Cincinnati, and Saint Louis.

From reliable data, recently obtained, I am satisfied that the fees collected on registered matter will fully cover the cost of maintaining the system, despite the burden imposed by the gratuitous work done for the Post-Office and Treasury Departments. In reaching the conclusion that this branch of the service is self-sustaining, with a wide margin for unpaid work, I have taken into account only the registry fees paid, and

have made no allowance for postages on a large amount of matter that never would have found its way into the mails except for the advantages afforded by registration.

While, so far as the public is concerned, the system may be regarded only as a useful adjunct to the postal service, it is a necessity to the pepartment itself for the transmission of its own valuable matter to points not reached by any other sure means of conveyance.

DIVISION OF FILES, RECORDS, AND MAILS.

The total number of letters and other inclosures received, opened, and examined during the year was 1,149,560, an increase over the previous year of 221,560, or nearly twenty-four per cent.

Among the inclosures were 557 containing money, and 3,061 containing unsalable postage-stamps and stamped envelopes.

Of the letters received, 24,301 were briefed, recorded, and filed, after final action had been taken upon them, and 7,134 letters, written in the bureau, were copied, enveloped, and stamped for mailing. The number of printed circulars stamped and mailed was 176,400.

A large portion of the work of this division is done by the messengers when not engaged in their regular duties, and they are frequently occupied long beyond the usual office hours.

ABUSE IN THE SALE OF STAMPS.

A matter seriously affecting the operations of this office grows out of the manner of compensating postmasters at fourth-class offices. The act of Congress of June 23, 1874, abolished the mode previously existing of allowing annual salaries based on the cancellation of stamps, and substituted the present system of commissions on the revenues. The presidential offices were assigned annual salaries, as before, to continue for two years upon each adjustment; but the fourth-class offices, comprising about 96 per cent. of the entire number, were allowed commissions on their current business in the settlement of their quarterly accounts-current. The rates of commission are 60 per cent. on the first $400 per annum of revenue collected, realizing $240; 50 per cent. on the next $800, realizing $400; and 40 per cent. on the surplus until the total amount of compensation reaches $1,000—the minimum salary of the presidential class. To entitle an office to be assigned to this class, the amount of its annual revenue need only reach $2,100, on no portion of which do the commissions fall below 40 per cent.

These liberal commissions furnish a strong incentive to postmasters at the smaller offices to increase their sales of postage-stamps, which constitute the almost exclusive source of revenue, and the questionable practices to which they have resorted to attain this end have become a matter of public notoriety. The abuse appears when the postmaster at a fourth-class office sells or trades stamps outside of its delivery. If sold within the delivery of another fourth-class office, the latter suffers to the extent of the commissions gained by the postmaster making the sale; if within the delivery of a presidential office, whose compensation it does not affect, then the amount of these commissions is a clear loss to the postal revenues.

Upon this office devolves the duty of issuing the stamps, and if it were possible to regulate the matter by furnishing only proper quantities, it is here that the abuse must be checked. In detailing the operations of the Stamp Division in a previous part of this report, allusion

was made to the great increase of work following the effort to check abuses by regulating the supply of stamps. The closest scrutiny has been exercised in filling requisitions; many of them have been reduced or wholly refused, only to be renewed with fresh excuses; others (and a great many more of them than could be given attention) were referred to the special agents for personal investigation; and all postmasters discovered in irregular practices have been promptly reported by this office, with a recommendation for removal. Many gross attempts at fraud have been frustrated; but all the vigilance that has been exercised in this direction has failed to provide an adequate remedy. So far from this, the evil has, on the whole, been constantly upon the increase. That this should be so will not occasion surprise when the facts are considered. There are now over 37,000 post-offices in the United States, scattered over a wide area of territory, concerning whose varying wants it is practically impossible for the department to be at all times fully and accurately advised; and the representations of postmasters in calling for supplies must, therefore, to a great extent, be accepted. Experience, though, has shown that second only to the variety of expedients developed by postmasters in effecting sales is the plausibility of the excuses assigned by them for needing unusual supplies.

It will be remembered that while any very great increase in a postmaster's requisition over the amount of stamps usually called for would probably be observed in the customary examination made, a small increase would either escape notice or be regarded as legitimate; and yet even a small increase in each requisition filled by the department, considering the frequency with which they are made and the immense number of offices making them, would in the course of a year aggregate a vast amount. This has been demonstrated by the actual experience of this office ever since the present method of compensation went into effect. With numerous notable exceptions, where extraordinary amounts have been called for, the requisitions of postmasters at the smaller offices have been gradually increased until their amount in general is known to be far beyond legitimate requirements, while it is impossible in a majority of cases to discriminate between honest and dishonest demands.

To establish a fixed arbitrary standard of supplies for each office would be productive of more evil than good, for it would admit of no allowance for the fluctuations of business or the growth and decline of communities in a country where sometimes cities and towns are built up and abandoned in an incredibly short space of time. Equally impracticable is it to investigate by agents all the cases of presumptive fraud that present themselves. To do this would require the present force of agents to be largely multiplied, with their time devoted exclusively to the business. The fact also will not escape attention that the legitimate patrons of an office might be seriously inconvenienced by the failure of their postmaster's supplies pending an investigation of his requisitions, and that they, rather than he, would be the sufferers if he happen to have traded off the stamps to outside parties. While the evil might undoubtedly be corrected to some extent by creating severe penalties for irregular sales, (the law at present imposing none,) yet it is not within the power of legislation to provide a remedy for all the various forms of abuse that have grown up if the incentives offered by the present system of compensation are allowed to remain. Besides, it is manifestly unwise, on general principles, to hedge in the sale of stamps. Better far not have the compensation depend upon the sale of stamps, and thus be free to encourage sales to the fullest possible extent.

The present system of compensation has at least the merit of furnish-

ing the curious paradox that the sale of stamps must be restricted to foster the postal revenues.

That the embarrassment attending the supply of stamps is among the least serious of the objections to the present system of compensation will be more fully understood from the following statement of some of its worst effects:

1st. *It is seriously demoralizing the service.*—On this point the testimony of disinterested postal officers in all sections of the country, and of other intelligent observers not connected with the service, is explicit and unvarying. It would appear that a large proportion of the postmasters at non-presidential offices, in defiance of orders and with a clear knowledge that they are swindling the government or robbing other postmasters of their legitimate earnings, are constantly engaged in soliciting and making sales of stamps to persons outside their proper deliveries—mostly in the large cities, where the practice is less likely to be observed, but often in the territory of their humbler neighbors, whose honesty or timidity prevents retaliation. Scarcely a day passes when the mails of this office are not laden with complaints of this wrong and the undoubted proofs of its growth. When discovery of it is made, and the offender is called on to explain, it is often the case that falsehood and sometimes perjury are the consequence. Every State and Territory of the Union is more or less infected, and it finds an outlet in almost every avenue of business. Its demoralizing effect will be best appreciated when it is considered that even merchants of good standing, large and respectable publishing-houses, insurance and banking companies, wealthy manufacturing corporations, and others engaged in every variety of private enterprise, are offering inducements, in one form or another, to these postmasters to dispose at a discount and in an otherwise illicit manner of the supplies furnished them only for their customary patrons. Every postmaster, indeed, who disposes of his stock in this way is indirectly guilty of perjury, for he violates that portion of his oath of office by which he is obligated "to *faithfully* perform all the duties required" of him.

It would be vain to attempt to enumerate all the agencies through which the abuse is perpetrated and encouraged. The postal establishment itself has been made the medium of disposing of stamps procured from country postmasters, it having been discovered that some of the authorized local agents for the sale of stamps in large cities have obtained supplies from this source, instead of purchasing them through the regular channels at the nominal discount allowed them by law. Among the possibilities is the one that postmasters at the presidential offices may obtain supplies in the same way at a discount, instead of procuring them from the department at full rates, and thus add to the emoluments afforded them by a fixed compensation. So, too, the retail stamp clerks at large post-offices might be enabled to dispose of considerable quantities of stamps obtained from the same sources, without the knowledge of their employers, (the postmasters,) who can require an accountability only for stamps regularly delivered for sale. To the uninitiated observer it may appear strange, and be suggestive of curious ideas about the administration of government, that public securities (for such postage-stamps are) should be hawked around at a discount, when the law fixes the standard and requires the issues to be accounted for at face value.

2d. *It is not an equitable method of compensation.*—It must be obvious to any one, after a moment's reflection, that the sale of stamps is no test of the work required of a postmaster. The primary object of his employment is to make up, dispatch, receive, and distribute the mails with

promptitude and regularity; and the principal labor of his office is performed in connection with these duties. The mere sale of stamps, while it imposes a responsibility upon him, represents the least of his labors. He may, for instance, in one day dispose of every stamp that he has on hand; he may make heavy sales of them, even in advance of their receipt, imposing not even the labor of handling them; or he may, by exchanging them for goods, and by using them for the payment of private obligations, or as a medium of traffic, create a fictitious sale, involving no labor at all connected with his office, and altogether disproportioned to its real business. And such is freqnently the case. Without the exercise of any duty legitimately appertaining to their official business, postmasters at fourth-class offices all over the country have so traded and exchanged and huckstered out in private traffic the stamps furnished them for public sale—often for less than their value—that today there is scarcely a city in the land where they cannot be bought of private parties at a material discount from legal rates.

3d. *It is the occasion of great injustice.*—This is the case whenever a dishonest postmaster encroaches in his sales upon the postal territory of his neighbors. His compensation is increased without any increase of work, while without any reduction of work their compensation is reduced. The great majority of postmasters at the non-presidential offices are undoubtedly honest and faithful, and it is but fair to them that the system of compensation which permits so gross a wrong should be at once abandoned. Justice demands that they should not only be protected from the encroachments of their less conscientious neighbors, but that they should not be left exposed to the temptations engendered by the system, with the spirit both of retaliation and avarice to encourage a departure from correct paths.

It has, too, been time and again discovered that an outgoing postmaster, instead of turning over to his successor the stamps remaining in his custody, has preferred to retain them and treat them as sold, in order to get the commissions allowed by law. By selling these stamps afterwards, (and on the allowance of a small discount, the sale of stamps in a small place, for a time, might be easily monopolized,) he would be enjoying the emoluments of the office while the new postmaster was doing the work. In the aggregate, the injustice which results from even this one form of abuse is enormous.

4th. *It is impairing the revenues of the department.*—On the 1st of July, 1874, when the present system of compensating postmasters at fourth-class offices went into effect, there were 1,547 presidential offices, receiving annual salaries adjusted under the old system, to continue for two years, commencing on that date, and whose compensation, consequently, was not affected by their sales of stamps during the two years in question.

The total amount of stamps sold at all the post-offices for the three years ending June 30, 1874, under the old law, when the compensation was not dependent upon sales, was $60,964,159.28, of which the salaried offices mentioned above sold $46,810,910.29, or 76.78 per cent., and the remaining offices, $14,153,248.99, or 23.22 per cent. During the next ensuing three years, commencing July 1, 1874, under the new system, the total amount sold was $71,939,845.20, of which the same 1,547 salaried offices sold $51,396,433.57, or 71.44 per cent., and the remaining (fourth-class) offices, $20,543,411.63, or 28.56 per cent., showing an increase of $4,585,523.28, or 9.7 per cent., at the presidential, and $6,390,162.64, or 45.1 per cent., at the non-presidential offices.

To put the matter differently, during the last three years these little

offices increased their ratio of the total sales, from the standard of the preceding three years, just 5.34 per cent., or $3,841,587.73, at the expense of the presidential offices. It is fair to presume that the rate of commissions allowed on this sum did not average less than 50 per cent., at which rate the amount of commissions lost to the government would be $1,920,793.86. These figures, of course, disclose nothing as to the encroachments of the fourth-class offices upon each other.

During the fiscal year ending June 30, 1876, the total amount of stamps sold was $24,583,968.40, of which the above 1,547 offices sold $17,677,635.78, or 71.9 per cent., and the remaining offices, $6,906,332.62, or 28.1 per cent.; and during the fiscal year ending June 30, 1877, the total amount sold was $24,362,423.49, of which the presidential offices sold $16,742,719.24, or 68.7 per cent., and the fourth-class offices, $7,619,704.25, or 31.3 per cent.

This shows a decrease of $934,916.54 at the presidential offices, an increase of $713,371.63 at the non-presidential offices, and a net decrease of $221,544.91 in the aggregate sales.

That there is a steadily growing tendency to increase the sales at the small offices at the expense of the larger ones, will appear from the fact that the proportions between the non-presidential and the presidential offices during the year ending June 30, 1875, were 26.2 and 73.8 per cent., respectively; during the next year, 28.1 and 71.9 per cent., respectively; and during the last year, 31.3 and 68.7 per cent, respectively.

In making the foregoing comparisons, the sales at the 1,547 presidential offices that existed on the 1st of July, 1874, were taken against those at all the remaining offices throughout the whole three years, without regard to the fact that during that time many fourth-class offices became presidential, either legitimately or by speculating in stamps, and the further fact that by the supplemental act of July 12, 1876, reducing the rates of commission, many presidential offices have been reduced to the fourth class. It should also be mentioned that the newspaper and periodical stamps provided for the special purpose of prepaying postage on second-class matter by publishers and news-agents, were excluded from the sales, leaving the comparison to be made on the stamps sold to the public for general purposes. As these newspaper and periodical stamps did not go into use until the 1st of January, 1875, and as the postage on second-class matter had previously been collected *in money* at the offices of delivery, the propriety of excluding them will be apparent.

Again: The sales during the three years ending June 30, 1874, under the old system, were, as before stated, $60,964,159.28, while during the next ensuing three years, under the new system, they were $71,939,845.20; being an increase of $10,975,685.92, or 18 per cent. The total compensation paid to postmasters during and on account of the same periods was, under the old system, $16,064,000.82, and under the new, $21,743,552.04; being an increase of $4,779,551.22, or 28.1 per cent.

The ratio of increase in the compensation thus exceeded that of the sales fully ten per cent., notwithstanding there were two special causes creating a tendency in the opposite direction: 1st. The aggregate compensation for the last three years was greatly lessened by the reduced commissions under the act of July 12, 1876. 2d. The change on the 1st of January, 1875, in the manner of collecting postage on second-class matter, largely transferred collections from the small offices to the large ones, (at places of publication.) The former thus lost the commissions on this matter, (50 per cent.,) and the large offices gained nothing, because the salaries had been fixed shortly before the change, to continue

for two years. There was consequently this double effect, that the collections appeared in the salaries of the fourth-class offices under the old system, and did not enter into the salaries of the presidential offices under the new system.

The reduction in the aggregate sales during the past year was, as compared with the previous one, as before stated, $221,544.91, or about nine-tenths of one per cent., while the reduction in the aggregate compensation was only $123,628.08, or a little less than one and seven-tenths per cent., despite the fact that the salaries of the presidential offices were reduced by the readjustment under the act of July 12, 1876, already referred to, several hundred thousand dollars per annum. From this it will be apparent that there was a large increase during the year in the compensation of postmasters at fourth-class offices, notwithstanding the reduction in the aggregate sales.

It may be said that the compensation of postmasters at fourth-class offices may at least be somewhat controlled by assigning them to the presidential class whenever the commissions in any case have reached the sum of $1,000. But even here the system is defective. The law provides that the salaries of the presidential offices shall be "assigned in even hundreds of dollars, and payable in quarterly payments, to be ascertained and fixed by the Postmaster-General from the respective quarterly returns to the Auditor for the Post-Office Department, or copies or duplicates thereof, *for four quarters immediately preceding the adjustment*," &c. The returns for *four quarters* are thus required before an office can be assigned an annual salary; and it sometimes happens that pending the receipt by the Postmaster-General of the required returns, an office receives, in the way of box-rents and commissions, an amount far in excess of the annual salary assigned to it upon the same returns, to take effect in the future.

A notable instance is that of the post-office at a city of recently acquired importance in Dakota. The office went into operation on the 9th of April last, and, its revenues up to the 30th September, (a little less than six months,) amounted to $6,225.13, on which the postmaster realized a compensation (in the way of box-rents and commissions) of $3,371.48. At this rate, his compensation for the entire year will amount to $6,742.96, and the returns upon which he will have received it will entitle him to a future salary of only $2,800 per annum.

A similar case has occurred in the oil regions of Pennsylvania, where the postmaster of a fourth-class office received a compensation for the year ending September 30, 1877, of $3,771.48, upon a gross revenue of $7,197.33; and upon the same amount of revenue the office was assigned to the presidential class with an annual salary of $2,600.

The great discrepancy in compensation between the above offices in the past, and the slight difference between their salaries in the future, is easily accounted for. As fourth-class offices they received the whole amount of the box-rents, while as presidential offices they will receive only commissions on the box-rents; and from this source the Dakota office collected $1, 341.53 in six months, and the Pennsylvania office, $1,212.50 during the entire year.

Additional light will be thrown on the subject by the abstracts presented below. They are but sample cases taken from a great mass on the files of this office, and the list might be very largely extended. For obvious reasons, the names of parties implicated are omitted in many instances.

1. The postmaster at New York City, in a recent letter to the department, says: "I desire to again call your attention to the remarkable

decrease in the sales of postage-stamps at this office, as shown by the following figures:

Sales for the quarter ending September 30, 1876	$592,614
Sales for the quarter ending September 30, 1877	556,487
Decrease	$36,127

"There can be no doubt that this apparent falling off in the business of this office is due to the irregular practice of postmasters in other places in disposing of postage-stamps in this city in the various methods with which the reports of the special agents of the department must have rendered you familiar."

2. The assistant superintendent of the railway mail-service at San Francisco, Cal., reports that "the two largest business houses in Salt Lake City, having branches and agencies in every town and village in the Territory, and being in daily receipt of from 100 to 200 letters, have not purchased from the Salt Lake post-office five dollars' worth of stamps for two years. On the contrary, they have them for sale, offering in one instance, at least, to furnish $1,500 worth to the Salt Lake postmaster if he needed them. * * * One Mormon from Southern Utah, coming into Salt Lake recently, bought new sets of furniture for his entire house, and paid for the same in postage-stamps."

3. A Georgia postmaster, whose name is withheld, writes, under date of August 28, 1877: "I sell stamps—give a percentage on stamps. A portion of these stamps go to Somerville, Ga.; some to Chattanooga, Tenn. There is a large amount of defrauding and swindling done under that salary and stamp law throughout the whole United States. There will be no end to swindling until the law is repealed. I am not alone in the swindling by many hundreds. Congress passed the law—left gaps open for postmasters to walk in at; they all do it. All classes provide for themselves; the devil for all."

4. The postmaster at Battle Creek, Mich., reports that peddlers of cigars and other goods are fitted out in his town, who traverse the country with teams, and in small places sell their merchandise for postage-stamps, at such rates as to be able to undersell the Post-Office Department. "You can readily see how it will affect its revenues." He instances the case of a debt of fifty dollars being paid in postage-stamps to a citizen of his town through a justice of the peace in the State of New York.

5. The following case illustrates a practice quite general among retiring postmasters: The postmaster at a small place in Mississippi, on entering into office, discovered that the late postmaster on going out had taken stamps received only two days before, amounting to $1,055.20, leaving the new postmaster entirely unsupplied. These stamps, it was claimed, had been sold, and the postmaster demanded the commission, which amounted to over $400. This would seem to be a very liberal compensation for two days' work.

6. The postmaster at Biddeford, Me., writes that a large number of country offices in his vicinity are selling stamps improperly, and says that "not one of them has increased in the amount of legitimate business for the past two years." The following is one of the cases he reports:

Average sale of stamps per quarter at Waterborough Center, prior to passage of present salary law	$44 00
Sales during second quarter, 1875	842 00

At these rates, the salary before the law would have been about $130 per year; at present it would be about $1,500.

7. One of the most enterprising dealers in stamps lives in Little Rock,

Ark., and he will be designated here as Mr. K. During the past year Mr. K. has mailed extensively to southern postmasters, circulars soliciting the sale of sewing-machines of several different manufacturers, and offering to receive postage-stamps in payment. He points out to them the low cost of a machine after deducting the commissions allowed by the government on the stamps, and says: "If you have the stamps on hand, send them at once; if not, order them and notify me, so that I may know that you accept the offer." He gives most excellent references as to his responsibility. His circulars are headed "*Strictly confidential, and for postmasters only*," and have the following foot-note: "N. B.—For the benefit of postmasters who think it a violation of law for them to dispose of stamps for a machine, I would say that I had one of our best attorneys here examine the law thoroughly on the subject, and he says it is no violation of law. There is, however, an order of the Postmaster-General against it; but the only penalty is removal from office, should he find it out and so desire. The penalty, however, will never be enforced, as this transaction is strictly confidential, and no one will know of our trade. If you want a good machine, there is nothing wrong in this trade." In one edition of his circular dated Sept. 18, 1877, under the caption of "A No. 2 Wheeler and Wilson H. C. sewing-machine, worth, retail price, $90, given free to every postmaster in West Tennessee," he uses the following language: "Order for me on Oct. 1st, say, $60 worth of postage-stamps of any denomination. * * Sixty dollars' worth of stamps will only cost you $24; that is all you have to pay the government for them; therefore, you make the machine clear, free of cost to you. Now this is an offer never made before, and as there is nothing wrong in your accepting it, I think you will undoubtedly do so. Our Congress meets October 15, 1877, and in a few weeks they will change the postal law, so as to take from you the large commissions you now get, and instead pay you a small salary; then the machines would cost you at least $50 cash."

To their credit it may be said that many postmasters refused to be tempted by K., and forwarded his circulars to the department with varying comments, some indignant and others humorous. Among the latter is that of a postmaster in Arkansas, who says: "I really believe the temptation or the tempter ought to be removed, and I think it would tend to the good of the service; you know I am mortal and hate to refuse a good thing, so I wish you would speak to him, (K.,) and tell him to QUIT." So, too, of a postmaster in a Missouri town, who writes as follows to a special agent: "Please see inclosed the great inducement I am offered; instead of procuring one sewing-machine, I have a notion to order a dozen and sew up this whole town, post-office and all. Wonder if it wouldn't pay to go into the sewing-machine business altogether? If I had a stock on hand, wouldn't you like to buy one cheap? I think this same hook has been cast at some of my neighboring postmasters, and I shouldn't wonder if some of them would bite." He signs his name with the addendum "Not yet in the sewing-machine business." It is evident, however, that all postmasters were not able to resist the seductive offers of Mr. K., for a special agent in July reported him on the authority of one of his agents as having $40,000 worth of stamps on hand, and as selling them in New York City. Another special agent reports the following:

"There is no doubt that many postmasters in different parts of the country are yielding to his (K.'s) solicitations to sell stamps contrary to the regulations of the department. * * * The extent to which the speculation in postage-stamps is carried, and its results to the service,

render additional legislation absolutely necessary. Either the present method of compensating postmasters by commissions must be abandoned, or the sale of stamps must be regulated by law specifically, and penalties enforced for their violation. The penalty of removal from office is utterly ineffectual, as one speculation is often worth more than the legitimate compensation of the postmaster for years."

It is no wonder that the postmaster at Little Rock, writing to the Auditor under date of May 22, last, should say, "It will be observed that my estimate (of receipts) is much lower than for any previous quarter;" for besides Mr. K., at least two other parties in Little Rock are known to have advertised to receive stamps in payment for goods, one of them at "25 per cent. off."

8. In addition to the case of the party just mentioned, which is specially referred to on account of the notoriety he has attained in disposing of his machines, the department has at various times and in various ways obtained circulars and letters showing that a large number of prominent business firms all over the country are to some extent engaged in a similar effort to procure trade. Among these are included two or three publishing-houses of New York, one or two publishers of Philadelphia, two or three jewelry establishments of Cincinnati, a large clothing house in Boston, a large tea company in Boston, two or three firms in Chicago, and a number of others, some of whose cases will be specially referred to hereafter.

9. The postmaster at Eau Claire, Wis., under date of October 30, of this year, writes as follows: "Owing to a strong *bear movement* among the little post-offices, our stamp-market has been greatly depressed during the past quarter. People seem disinclined to pay the face value for stamps *when they know where they can buy them* 40 *per cent. off*. Our city is growing larger, as also the mails, *while our sale of stamps grows beautifully less*."

10. Special Agent Bigelow reports as follows: "The postmaster at ———, Maine, acknowledged to me that he had sold to parties in Portland, Me., stamps, &c., to the amount of $200 or $300. He delivered them to the parties in his store, and claims to have sold them for full value. I find that the postmaster purchased of these parties on same day goods to the amount of several hundred dollars."

11. The postmaster at Cleveland, Ohio, writes as follows: "Mr. ———, of this city, this day brought 100 6-cent stamps to this office to exchange. He said they were sent to him in the way of trade by a party in Marine City, Mich."

12. The following case is of the same character as that mentioned in No. 5: Upon going out of office, the postmaster at a small town in Georgia carried off stamps amounting to $522.67, and reported to this office that his stock had all been sold. A few days after, a report was received here from the postmaster at Griffin, Ga., to the effect that this party was then selling stamps at a discount within the delivery of the Griffin office.

13. The postmaster at Houston, Tex., writes: "There is a man in this city who formerly purchased from $300 to $400 worth of stamps at this office monthly. He now not only does not buy of us, but furnishes all the news-agents (who sell stamps) and several large firms with stamps and envelopes, all bought from country postmasters, who pay the government 40 cents on the dollar for them."

14. The postmaster at Saint Louis, Mo., states that it has come to his knowledge that one ———, postmaster at ———, Utah, has offered to buy $500 worth of groceries, provided that the merchant will take post-

age-stamps in payment. He states also that he has heard of another offer to purchase $500 or $600 worth of goods with postage-stamps.

15. The postmaster at ———, Utah, writes to certain merchants in Saint Louis, Mo.: "On perusal of your advertisement in Semi-Weekly Deseret News, I have resolved to get shoes from your establishment by mail or express on wholesale terms if you can take postage-stamps in payment."

16. The postmaster at Savannah, Ga., states that the value of stamps sold at his office in the month of July, shows a falling off this year from 1874 of $692.35, and from 1873, of $661.17. This state of facts he attributes almost entirely to the increasing practice among postmasters at small offices of selling or disposing of stamps "by sending them to this city in payment of debts or in exchange for money or goods."

17. Upon investigating affairs at the post-office at ———, Maine, Special Agent Bigelow reports as follows: "Office is under sole charge of Mrs. ———, (mother of the postmaster.) I have positive proof that some time ago she made arrangements to send postage-stamps to her son in Saint Louis, to be used in a large manufacturing establishment of which he was book-keeper and cashier. She has sent him regularly by mail since January, 1875, stamps as follows:

January to March, 1875	$200 00
April to June 30, 1875	301 00
July to September 30, 1875	422 61
Total	923 61

"It will be seen that Mrs. ——— has been doing a thriving business for an office which rated prior to July 1, 1874, at only $58 per annum."

18. The post-office at ———, (near New York City,) N. Y., was established 30th July, 1874. For the last three quarters of 1876 its sales averaged $237 per quarter. After investigation, the special agent reported that "the actual business of the post-office, according to the postmaster's own admission, is very small, and the average number of letters sent away will not exceed ten daily. Postmaster was under the impression that it was his duty to receive orders for stamps from anybody; that all he had to do was to deliver them in New York City, and receive the face value for them."

19. Similar to the above is the case of the post-office at ———, (near Charleston,) S. C. The sales at this office were increased from $75 in the first quarter of 1876, to $422.80 in the second quarter of same year. The special agent who investigated the matter reports that the "postmaster had sold during second and third quarters of present year nearly $700 in stamps, &c., making an annual average sale of nearly $1,400. The post-office there is supported only by a limited country patronage, and could not legitimately consume over $300 per annum in stamp stock."

20. Some time ago the clerk of one of the most prominent hotels in New York wrote to the postmaster at Clinton, Iowa, offering to purchase large quantities of stamps at a discount. Although the attention of his employer was called to the matter as soon as it was discovered, the clerk appears to be pursuing the same practice, having on the 25th October, 1877, made a similar proposition to the postmaster at Santuck, S. C. It is fair to presume that this man, with his great facilities for the sale of stamps, is largely engaged in the business of buying and selling them, perhaps at a discount.

21. On October 17 of the present year John A. Dice, deputy United States marshal in Michigan, writes to the department that parties in

that State are purchasing 3-cent stamps at $1.50 per hundred—just half their legal value.

22. The postmaster at a small fourth-class office in one of the Southern States was dismissed January 20, 1876. On the first of that month he had on hand stamps to the value of $162.30, and on the 10th he received an additional supply of $501.20, making a total of $663.50 to be accounted for. Of this amount he turned over to his successor $84.49, leaving $579.01 accounted for as sold. Affidavits were submitted to the department to show that these extraordinary sales for so small a place were made in the usual course of business, upon application of the postmaster's patrons, without any solicitation on his part, and the member of Congress for the district vouched for the postmaster's good faith in the matter. The explanation was that his neighbors resented his displacement, (he was removed for stealing money-letters,) and purchased his stamps in large quantities to manifest their sympathy with him and their dislike of his successor. A suspicious circumstance connected with the affair, however, is the fact that not long subsequently one of the postmaster's bondsmen was reported by the special agent in New York as remitting large quantities of stamps to that city in payment of bills. The commissions allowed on the $579.01 sold for the 20 days in January as compensation for services during that period amount to $240.49, more than the salary for half a year under the old system of computing salaries, and more than the salary under the present system for the previous quarter, (92 days.) At this rate throughout the entire year, the annual compensation of the office would be $4,388.94, or $388.94 more than the salary paid any postmaster in the United States, except the postmaster at New York City.

23. The postmaster at Walton, N. Y., reports that certain postmasters at small offices in his vicinity are interfering quite seriously with the business of his office by selling stamps within its delivery.

24. Some time back the postmaster at Portsmouth, Va., reported that "some of the postmasters of the fourth class are making a business of trading in stamped envelopes, for the purpose of increasing their compensation, in a manner calculated to diminish the receipts of the larger offices," and cited conclusive instances of the same.

25. The postmaster at Memphis, Tenn., has heretofore stated that he has "reason to believe that country postmasters are selling stamps in Memphis," from the fact that his stamp and envelope sales have been materially reduced—one month only showing $911.45 less than the sales for the same month of the preceding year, when the present salary law was not in force.

26. The postmaster at Greensburg, Ind., some time ago reported that a prominent grocer in his town was doing a large business in selling postage stamps at ninety cents on the dollar, and by his own admission had already cleared a considerable sum on a net profit of 10 per cent.

27. A short time after the salary law went into operation it was discovered that the postmaster at ———, N. J., besides being station-agent of a railroad company, was also the agent of a land company, whose headquarters were located in New York. An officer of the latter company openly declared to the department that, as they could not pay their agent much salary, they had got him the post-office to help him out, and that they proposed to buy all their stamps of him, and had already sent him a customer for $200 worth. He stated that the salary of the office in this way could easily be run up to $700 or $800 a year, and claimed that the effort was justified by the law. The postmaster himself evinced his desire to co-operate by ordering large quantities of stamps from the

department. The legitimate sales of this office would probably not exceed $100 a year.

28. A rather striking instance of the effects of the present salary law is afforded in the case of a country post-office in Virginia. The sales of stamps, &c., at this office before the passage of the law averaged about $30 per quarter. For three quarters of the last fiscal year they averaged $345 per quarter. Upon an investigation into the causes of this tremendous increase, it appeared that the postmaster was a wealthy gentleman residing in one of the principal cities of the State, the president of two banking-houses, and that the most of the stamps received were sold to these institutions. The assistant postmaster, who does the business of the office, admitted that its legitimate sales could not possibly exceed $50 per quarter. The salary should therefore be about $100 per year; but under improper sales, as above, it would be about $700.

29. Some time back, Special Agent Sharretts, in the course of an investigation as to the improper sale of stamps at ———, N. Y., discovered from the testimony of gentlemen in that vicinity that arrangements had been made by certain parties in Sullivan County "with at least a hundred postmasters for all the postage-stamps they could supply, and with whom the commissions allowed by the department" were to be divided. He found, also, that the sale of stamps in that section at a discount was notorious; that even "teamsters hauling freight to and from the railway-stations buy stamps from interior offices at a discount of 25 or 30 per cent., and sell them at an advance."

30. Special Agent Hawley, in reporting the case of some business men in Chicago who buy their stamps in suburban towns, though using them in the city, says: "The present mode of compensating postmasters furnishes a premium to fraud, and there will be continual trouble until the system is changed."

31. Special Agent Henry, after investigating improper sales of stamps at ———, N. Y., reported that the postmaster was actively engaged in business in Buffalo; that most of the stamps sold at the office were used in Buffalo; and that for "every dollar of commission thus gained to the postmaster there was a corresponding loss to the department."

32. Special Agent C. E. Henry, on investigating certain large sales of stamps and stamped envelopes in Ohio, makes the following remarks: "The proceeds of a peddler's trip is generally a large quantity of stamps, envelopes, and cards that must again be turned into money. The department is no doubt informed of the various dodges in this kind of swindling that is demoralizing to the service, and if continued robs the department of millions of dollars. Patent-medicine men understand it, and buy all their stamps of country postmasters to induce them to sell their medicines. It would be impossible even for a very large force of agents to stop it. Those who purchase stamps in that way nearly always refuse to give information. A sure and speedy remedy is needed."

33. The postmaster at Utica, N. Y., writes under a recent date that the "merchants and publishers" of his city frequently "receive postage-stamps from parties out of town in payment of bills," and that some of these merchants are "now making efforts to dispose of them."

34. The postmaster at Oxford, Ala., sends to the department a written proposition made him by a person living in another place, of which the following is an extract: "I buy of postmasters a great many stamps, and will buy of you if you wish to sell at a discount. * * I do this in the strictest confidence. * * I will take $500 worth a month if I can get them." The party then refers to a number of respectable business firms in Georgia and Alabama to show his standing.

35. Special Agent John B. Furay some time ago called attention to "the immense amount of revenue that is being stolen by postmasters at small offices in the shape of commissions for stamps sold." He further says: "I have heard complaints from every postmaster at presidential offices all over the whole West of the falling off in sales of stamps without any decrease whatever in the number of letters mailed. I do not know that the evil exists to the same extent in the East, but out here in the West I do know that it is fearful." Mr. Furay then goes on to state some of the ways in which sales are made to "commercial agents," to "runners," to "publishers in the cities," &c.

36. The postmaster at Birmingham, Ala., states that "it is almost an every-day occurrence to see men going the rounds" there "with stamps and stamped envelopes at a discount, and in exchange for goods. I could supply my office at a heavy discount, were I so disposed. I was offered a large lot of stamps and stamped envelopes to-day by a merchant who got them from parties here peddling them for goods or trade."

37. The postmaster at Omaha, Nebr., has also reported that merchants of his city are receiving postage-stamps from other places, and have endeavored to exchange them at his office.

38. The postmaster at Carbondale, Pa., reports the case of a large coal company in that section who are buying all their stamps of a country postmaster, who is also one of their agents.

39. The postmaster at Willimantic, Conn., some time since inclosed to the department the advertisement of a certain party who offers to sell postage-stamps at 5 per cent. discount.

40. Special Agent J. L. Wilder reported more than a year ago from Oshkosh, Wis., that "there never was a time when so many persons are found with unusually large lots of postage-stamps as at present. Postmasters of small offices are often using stamps in discharge of private debts."

41. The postmaster at Watertown, N. Y, under date of July 7, 1877, writes as follows: "The sale of stamps by country postmasters at 40 per cent. off for goods among our merchants, peddlers, cigar and tobacco dealers, and especially our insurance companies, is rapidly reducing" the revenues "of this office. Our mails are as heavy as ever, but our receipts for stamps will be from $4,000 to $5,000 short from the above cause." He instances the case of a party "who has had extensive mail business with this office for the last few years; but, since the late law of adjustment of salaries, he does not buy anything of us, and has stamps to sell." He also states that insurance companies, "sewing machine companies, and others take stamps in the way of trade, and do well; but the government goose gets picked by it."

42. The postmaster at Washington, N. J., writes that "for a few years back one of the largest dry-goods stores in this town has been selling postage-stamps in quantities to suit purchasers. The supposition is that they procure them from some of the inland post-offices in exchange for goods. * * * It is an injury to the government if they are procured as I suppose."

The following case will afford some explanation to this complaint: A firm engaged in manufacturing parlor-organs in Washington, N. J., reported to the chief special agent of the department that they had "sold an organ for $100" to a postmaster in Tennessee, "agreeing to take pay in installments of $25 every three months *in 3-cent stamps;*" that "he sent September 11 (1876) $30 in 3-cent stamps—$5 to prepay freight;" and that on February 5 (1877) they received from the post-

master a registered letter purporting to contain $39 in 3-cent stamps, but which was found to have "nothing in it." They submitted the envelope—a small one of letter size—to show that it never could have contained 1,300 3-cent stamps, and its appearance certainly sustained this theory. The purchase of the organ with stamps was a fraud upon the government, which the firm could at least regard with complacency so long as they were sharing the gains, if they did not, indeed, solicit the trade; but when the postmaster adds to this fraud another at their expense, they suddenly become awakened to the enormity of *his* offense, and with an air of virtuous indignation draw the following conclusion: "We presume any man who as postmaster would defraud the government would also steal an organ if he could, or send a bogus registered letter." In a spirit not of divine charity, but still with an eye to business, they close the letter with the request: "Please go for his scalp, and if you can, get our money."

A supplement to this case is afforded by that of the postmaster at ———, Ohio, who, more innocent and perhaps more honest than many of his neighbors, writes as follows to the department: "I have a chance to buy an organ and pay for it in postage-stamps. May I have the privilege of doing it? I am a poor man and not in very good health, and would like to procure an organ for my family."

43. Not far from the above city of Washington, N. J., is a small post-office which will be designated by its initial letter K., as will also its postmaster, from whom the office is named. He (Mr. K.) was reported as selling stamps improperly by a postal clerk at Washington in a communication of which the following is an extract, viz: "I wish to call your attention to the sales of postage-stamps and postals to the business men of this place by parties outside of this post-office. The different firms here in the organ and piano business are getting postage-stamps from all parts of the country in exchange for organs. I know one firm that have received during the last six months over $700 worth of stamps from the South and West. There are several other merchants that are sending out a great amount of mail-matter that have not bought a stamp from this office for years. I will give you the name of —— ——, (K.) postmaster at ———, (K.) N. J., that sold in this town yesterday, May 1, 1877, postage-stamps to the amount of $75—25 sheets 3-cent stamps. This I know for a fact, as it is entered in the purchaser's book as above."

During the last year Mr. K. sold stamps amounting to $1,753.90, when his sales previously had not exceeded $75 per annum. In order to obtain stamps when his requisitions had been refused, he represented that there had been a great increase of business at his place, and furnished certificates from the parties requiring the stamps for use. These certificates were *not dated at any place*, leaving the inference that the parties resided at K., but as a matter of fact it has been ascertained that they were engaged in business at Washington. Indeed, one of them is signed by the firm of organ-dealers mentioned in the preceding case. It is but fair to say, though, that the certificate of this latter concern bears evidence of mutilation, the upper portion, which probably contained the name of place and date, having been cut off, and simply the date appearing at the bottom, evidently in the handwriting of the postmaster.

44. Quite recently the proprietors of a leading weekly periodical in Philadelphia, Pa., wrote to the department asking to have exchanged a large quantity of postage-stamps which, as they stated, had been "received in the course of business" from persons in other places. They

stated further that they had "accumulated during the last year nearly one thousand dollars' worth" in this way.

45. The postmaster at Blue Earth City, Minn., reports that nearly all the merchants in his town have quantities of stamps on hand which they have received for goods.

46. Special Agent W. H. Bigelow some time ago reported that the post-office at Solon, Me., was suffering from the depredations of a neighboring post-office.

47. Some time ago the postmaster at a country office in West Virginia made requisition for a very unusual quantity of stamps, ($396 worth,) which, on investigation, were found to be intended for a high State official of West Virginia, whose office was at the capital of the State.

48. Near the first of the present year the postmaster at Baltimore, Md., called attention to the fact that a large quantity of stamps was being received by certain merchants in his city from a country postmaster. On examining this postmaster's accounts, it was discovered that his sales had increased from an average of $17 per quarter before the passage of the salary law to an average of $264 per quarter since. At this rate, his compensation as postmaster would be increased from about $40 per annum to fully $600.

49. Some time ago the postmistress at ———, La., near New Orleans, making requisition for an unusually large quantity of stamps, was investigated by a special agent, who discovered that she was keeping a news-depot in New Orleans, and largely disposing of stamps there.

50. The postmaster at Graham, N. C., reports the case of the owner of a neighboring cotton-factory who purchases all his stamps at another place, his brother being the postmaster.

51. The postmaster at Galveston, Tex., writes under date of July 7, last: "This office has been frequently victimized by the sending postage-stamps in large quantities to merchants of this city by parties in the country. * * * This practice has at last come to be such a good thing that it is gone into systematically and largely. * * * It is such an evident fraud on the department that I would suggest a thorough investigation of it throughout this State."

The same postmaster sends to the department a circular of a sewing-machine agent in Houston, Tex., sent to a certain merchant in Galveston, stating in substance that he has large quantities of stamps on hand received in the way of trade, and offering them in amounts to suit at 2½ per cent. discount.

52. The following extract from a letter received at this office recently is one out of many requests made on the department to exchange or redeem stamps that have been acquired in the way of trade. It is from a merchant of Albany, N. Y.: "We get a great many postage-stamps by mail in payment for cards, pictures, &c.—more than our mail matter demands; and if we are obliged to receive them as cash, there should be some way of exchanging them."

53. The postmaster at Gouverneur, N. Y., reports the case of a banking-house in his place which mails annually letters amounting to $200 of postage, the stamps for which are purchased entirely at a small office. He says: "At this rate, while my office is doing the postal work, the postmaster at some other office is receiving $120 per year more than he is entitled to, and the Post-Office Department is actually losing that amount." He also instances other irregularities of a similar character, and states that stamps are offered by private parties for sale at 10 per cent. discount.

54. The postmaster at Fort Scott, Kans., says: "I have reason to

believe that there are a number of small offices in this section of the State who are sending stamps to merchants of this city in payment for goods."

55. The postmaster at Milwaukee, Wis., under date of June 26, 1877, says: "Large amounts of postage-stamps are being disposed of in this city by country postmasters. From the best information I can obtain, I estimate the amount at not less than $20,000 per annum. Of course the government is being defrauded thereby. I trust that Congress will, at its next session, * * * base the compensation of small country post-offices upon the amount of stamps canceled."

56. The postmaster at Frederick, Md., more than a year ago reported to the department that stamps were being offered for sale by private parties in his place at one-sixth less than their legal value.

57. Special Agent Belden, after investigating the matter of unusual sales of stamps at ———, Mich., some time since, reported that certain members of the deputy postmaster's family, who were doing business in Detroit and Chicago, were purchasing all their stamps at that office, for the purpose of increasing the postmaster's compensation.

58. The postmaster at Taunton, Mass., reports the case of a heavy grain and flour firm which formerly purchased stamps at his office to the amount of $200 a month, and which now obtains all its stamps in the way of trade with country postmasters. This firm is still, however, mailing and receiving its letters at the Taunton office.

59. The postmaster at Naperville, Ill., incloses to the department, under date of March 7, 1877, a letter received from a company in Chicago, from which the following is extracted: "We can use from twenty-five to fifty thousand stamps per week, and would like to know if you could supply us with this amount at a liberal discount, as we cannot get discount at the Chicago post-office. *All large stamp-consumers in this city are buying in the country for the same reason.*"

60. The postmaster at Keene, N. H., reports the fact that stamped-envelopes are being sold in his place, by private parties, for less than government rates.

61. The department is in possession of a letter addressed to a certain postmaster in Maryland, offering to buy 27,000 postage-stamps of 3 and 6 cent denominations, at a discount of about 25 per cent.

62. The postmaster at Champion, Mich., forwards to the department a proposition made him by a party in Marquette to purchase 5,000 stamped envelopes and divide commissions.

63. The postmaster at a presidential office in Wisconsin recently inclosed to the department convincing proofs that the postmaster at Dupont, Wis., was selling stamps improperly. He states that the stamps thus disposed of were "so plenty and used so much for traffic, that they are called 'Dupont currency.'" "The little handful of mail received at Dupont (weekly only) is kept in the house, with no show of office-furniture, and yet the postmaster's salary exceeds mine by considerable."

64. The same postmaster in another letter says the general practice among country postmasters of selling stamps for goods "is getting worse. Of the mills, stores, and banks, in this city, fourteen of the twenty have not bought a stamp of me for a year and a half. My business and social relations with all of them are pleasant; but they say they have to take the stamps or lose the trade, so they take them—in many instances at a discount. * * * Stamps are brought in here and exchanged for all conceivable articles of merchandise, and are urged upon the citizens here for debts and dues of all kinds."

65. A merchant of Hartland, Vt., writes to the department quite re-

cently that in his store he frequently sees men peddling stamps which are publicly stated to have been obtained in the way of trade with a certain fourth-class postmaster.

66. The postmaster at Somerville, N. J., in alluding to the practice among country postmasters of selling stamps outside of their delivery, "and thus taking advantage of the present mode of compensation," says that "the government is defrauded out of hundreds of dollars yearly in this county, and the evil is daily increasing."

67. Special Agent Schaurte, some time ago, in reporting the investigation of a case where certain private parties were found to be selling stamps at a discount in Saint Louis, Mo., took occasion to say: "I know several firms in this city who are in constant receipt of stamps from postmasters in payment of debts. * * * I am in hopes that the first thing Congress will do is to repeal the law regulating the salaries of postmasters at fourth-class offices. The quarterly salary should be based upon stamps actually canceled, verified by oath; and whenever a postmaster is caught raising his salary fraudulently, he should be prosecuted for embezzlement and perjury."

68. The postmaster at Savannah, Ga., some time ago reported the case of a country postmaster who had sent stamps to a merchant of that city, probably in payment of a debt.

69. The postmaster at Houston, Tex., in a recent letter to the department, says: "In August last I wrote you concerning the fraudulent practice of postmasters throughout the State who were selling postage-stamps to the agent of 'a prominent sewing machine company' in this city. Since then I find that other parties are dealing in stamps in the same manner." He then mentions the agents of two other sewing-machine companies who are engaged in the traffic, one of whom a few days prior to the date of his letter had received "two thousand dollars' worth in this way." He says further, "I should think some measure should be speedily passed by Congress preventing this grand swindle, which is perhaps greater than the whisky-ring in the direct loss of revenue to the government."

70. Shortly after the present salary law went into operation, it was noticed that the requisitions for stamps from the postmaster at ———, Md., a small office near Baltimore, were increasing largely in amount. After an investigation of the matter, Special Agent Henderson reports as follows: "The friends of the postmaster, with his knowledge, are soliciting the sale of stamps to persons living and doing business in Baltimore City, Md., and outside the delivery of his office. The postmaster informed me that he knew his friends were soliciting the sale of stamps, and persons living in the city had called for stamps and he asked no questions, but delivered them. I also learn that most of the smaller offices in this vicinity are soliciting the sale of stamps in the same manner."

71. Quite similar to the last case is that of the postmaster at another small office in Maryland. The special agent who examined the matter says of the postmaster: "In his capacity as agent of the ——— Railroad Company he purchases stamps from himself for the use of the company. The treasurer of the company, whose office is in Baltimore, purchases from this postmaster from friendly motives. The ——— Company purchase a large proportion of the stamps sold at this office."

The postmaster's average sales per quarter prior to the passage of the present salary law were $67.50; his sales for the first quarter of 1875 were $457.78. At this rate, his salary (which should probably be about $100 a year) would reach nearly $800.

72. The postmaster at Amenia, N. Y., says: "The sale of stamps at this office is being seriously affected by the operation of a wholesale, stationer and cigar-manufacturer, whose place of business is at ——— N. Y. Shortly after the new law for fixing salaries of postmasters went into operation, he offered to sell me stamps in large quantities at 25 per cent. discount. I discovered that he sold goods to postmasters, and took postage-stamps in payment. He has a number of peddlers' wagons running all through this and adjoining States, and it is these that bring in the stamps. This party sells them to the stores, the banks, hotels, and anywhere that he can find a purchaser, giving a discount in some cases as large as he offered me."

73. At a small office in Massachusetts, near Boston, where the legitimate sale of stamps would average about two or three hundred dollars per quarter, the postmaster made a requisition during the third quarter of 1875 for stamps to the value of over six thousand dollars. These were no doubt to be sold in Boston.

74. The following is extracted from a circular received by a large number of postmasters: "On the fifteenth page you will see a description of our $5 rifle. It is the biggest bargain we have ever offered, and that is saying a great deal. We will send you this rifle and the Swiss watch, represented above, for $13.50 in postage-stamps."

75. The postmaster at New York sends a letter received from a private party by certain bankers in his city, of which the following is an extract: "I have had sent me $100 in 3c., 5c., 6c., and 10c. postage-stamps. They have been paid me on a debt owing me. Can you buy them to use? and, if so, your very lowest percentage you will buy them of me."

76. The postmaster at Berkshire, N. Y., under date of 29th June, 1877, reported the case of several parties who are peddling postage-stamps in his place, received in payment of debts from postmasters.

77. The postmasters at Ithaca, N. Y., says: "In making up my statement for the quarter ending September 30, 1877, I find that the sale of stamps for the quarter shows a falling off of over $400 from the amount sold during the same quarter last year, while I believe we have handled as many, if not more, letters than we did during that time. We have several wholesale dealers that have not purchased their stamps at this office, though they send off their usual supply of letters. Some of them have told me that their agents have taken stamps of parties 'off on the road,' as they term it. We have some wholesale confectioners, tobacconists, paper-dealers, grocers, &c., who do not buy their usual supply at this office—to some of them we have not sold a dollar's worth in months; and as they get them somewhere, the inference is that they accommodate certain postmasters who are patrons of theirs at the expense of the revenues of the department."

78. The postmaster at Ashland, Pa., says that "there is not a small office within ten or fifteen miles of this office that don't sell or trade stamps for goods."

79. The following is an extract from a letter sent by a business man in New York to the postmaster at Harlingen, N. J.: "I want two hundred dollars' worth of 3-cent postage-stamps, fifty dollars' worth of 6-cent stamps, and fifty dollars of 2-cent stamps. If you will get them for me or send me word when you have them, I will come or send for them. I expect 25 per cent. off."

80. Special Agent Wildman, writing the department in a certain case, says that a store at Clark's Hill, Ind., "is furnished with stamps by a traveling-agent for a tobacco-house in Cincinnati."

81. The postmaster at Aberdeen, Miss., informs this office that the postmaster at ———, Miss., is supplying several of the largest business houses in Aberdeen with stamps, and he is satisfied that one of the banking houses there is acting as the postmaster's agent.

82. The following proposition, it is well to say, is the only one of its kind received. It is addressed to the Third Assistant Postmaster-General, by a person purporting to be a merchant in Caseyville, Ky.: "If you will furnish postage stamps, upon the order of the postmaster here, to the amount of $400, every three months, I will pay you individually, $25 per quarter." The proposition was not accepted.

83. The postmaster at Windsor, Vt., reports that several postmasters in his vicinity have been trading in stamps, receiving merchandise in payment, causing a decrease in the sales of his office, and says: "One person had several hundred dollars' worth received from postmasters for merchandise." He mentions the postmaster and late postmaster at ———, Vt., and the postmaster at ———, N. H., as "largely engaged in the business." At the former place, two successive postmasters were removed for selling stamps improperly.

84. The postmaster at Muscoda, Wis., reports that "the postmaster at ———, Wis., after failing to sell a large quantity of stamps to a banker in Muscoda, expressed them to Chicago;" also that "the postmaster at ———, Wis., had sold stamps in quantity to merchants in Muscoda."

85. Shortly after the present law regulating salaries went into effect, a person—probably a traveling commercial agent—offered to furnish one of the local agents of the department in Wall street, New York, with $10,000 worth of stamps a month at a material discount.

86. Some time since two merchants in New York wrote the department, asking to have large quantities of stamps exchanged for currency, stating that they were constantly in receipt of stamps from all parts of the country sent in payment of goods.

87. The postmaster at Luverne, Minn., reports that "postmasters ten miles away have sold stamps to the merchants of Luverne, trading them for such necessaries as dry goods and groceries."

88. The postmaster at ———, Ill., a suburb of Chicago, some time since ordered 50,000 one cent stamps for a newspaper publisher in Chicago, who, he stated, was his best "customer, using a large amount of stamps." Only a few days previously he had obtained stamps to the amount of $117. Prior to the passage of the salary law his supplies averaged less than $30 per quarter.

89. Not long since Special Agent S. D. Brown reported that certain merchants of Louisville, Ky., had received postage-stamps from a postmaster in Tennessee in payment for cigars and tobacco, and reported that said firm had on hand two hundred dollars' worth of stamps acquired in this way.

90. The postmaster at Minneapolis, Minn., expresses his belief that the practice of paying for merchandise with postage-stamps "is quite common among some postmasters in charge of small offices," and says he knows "by actual count" that his "office cancels a larger amount of stamps than it sells."

91. The postmaster at Norwalk, Conn., reports that a merchant in Norwalk applied to him for the redemption of a quantity of postage-stamps which had been "taken for merchandise from a country postmaster who was running a little store;" also that, "upon inquiry among other merchants," he finds "there are several postmasters of the fourth class who are disposing of stamps far beyond the jurisdiction of their offices in a similar manner."

92. The postmaster at Flora, Ill., reports that in his town there are "several merchants who have large quantities of stamps on hand that they traded goods for."

93. The postmaster at Fayetteville, Ark., reports that "it is a common practice among country postmasters in his vicinity to traffic in stamps;" that "every Saint Louis drummer has a large supply of stamps to pay his hotel and livery bills;" and that he was told by a drummer that "one postmaster trades stamps for goods to the amount of $50 or $60 at a time."

94. The postmaster at Ripon, Wis., reports "that many postmasters are hawking postage-stamps and stamped envelopes * * * * in the large places in Wisconsin."

95. The postmaster at Norfolk, Va., reports that postmasters in North Carolina in mercantile business "often send quantities of postage-stamps to pay for purchases made in Norfolk," and that "the stamps are afterwards peddled around the city."

96. The postmaster at Asheville, N. C., reports that it is a common practice among the country postmasters in his vicinity to bring stamps to Asheville and trade them for goods.

97. Special Agent Bigelow reports that the postmaster at ———, Vt., "very reluctantly admitted that he had sold stamps in all quantities to commercial travelers and peddlers."

98. Special Agent Brown, after investigating improper sales at ———, Ky., says: "It is clearly established that the office has been making an unlawful disposition of stamps."

99. Special Agent Charles Field, upon investigating affairs at the post-office at ———, Mass., reported that the "son of the assistant postmaster, who had entire charge of office and store where the office was located, purchased the goods for his store with postage-stamps, and thus fraudulently increased the postmaster's compensation."

100. Special Agent Johnson, upon investigating the post-office at ———, O., discovered that the postmaster, (a merchant,) was selling stamps for goods. The postmaster stated that "being in the mercantile business," he was "frequently visited by commercial travelers," and that, he being one of their patrons, they desired to give him "the benefit of sales of stamps," and hence made their purchases of him.

MISCELLANEOUS.

It is only just to the employés of the office that I should testify to the fidelity and zeal with which they have performed their duties. There has been a large increase of work throughout all branches of the office, and much of the work being of such a character as to require immediate attention when presenting itself, has not infrequently, in times of unusual pressure, made demands upon the clerical force for extra services outside of the usual office hours. Such demands have been cheerfully and promptly met.

Not only is the increase of force asked for this office not proportioned to the increase of work to be expected, but it is designed to throw greater safeguards around operations in which the government has large interests at stake.

Very respectfully, &c.,

A. D. HAZEN,
Third Assistant Postmaster-General.

Hon. D. M. KEY,
Postmaster-General.

No. 1.—*Estimates of appropriations required for the service of the fiscal year ending June 30, 1879, by the Post-Office Department.*

OFFICE OF THE POSTMASTER-GENERAL.

Mail depredations and special agents, including amount necessary for fees to United States attorneys, marshals, &c	$150,000 00
Advertising	75,000 00
Preparation and publication of post-route maps, including constant revision of former editions and furnishing maps, diagrams, and other information by the topographer and assistants	45,000 00
Miscellaneous items in the office of the Postmaster-General	1,500 00

OFFICE OF THE FIRST ASSISTANT POSTMASTER-GENERAL.

Compensation to postmasters	7,500,000 00
Clerks in post-offices	3,700,000 00
Letter-carriers	2,100,000 00
Wrapping-paper	25,000 00
Twine	50,000 00
Marking and rating stamps	12,000 00
Letter balances and scales	5,000 00
Rent, fuel, and light	450,000 00
Office furniture	30,000 00
Stationery	55,000 00
Miscellaneous and incidental items	145,000 00

OFFICE OF THE SECOND ASSISTANT POSTMASTER-GENERAL.

Inland transportation, railroad	10,140,126 00
Inland transportation, other than railroad	7,090,673 00
Railway post-office clerks	1,385,000 00
Route-agents	1,070,000 00
Mail-route messengers	171,000 00
Local agents	125,000 00
Mail messengers	692,472 00
Mail locks and keys	15,000 00
Mail-bags and mail-bag catchers	200,000 00

OFFICE OF THE THIRD ASSISTANT POSTMASTER-GENERAL.

Postage-stamps	85,000 00
Expenses of agency	8,100 00
Stamped envelopes and newspaper-wrappers	547,000 00
Expenses of agency	16,300 00
Postal cards	170,000 00
Expenses of agency	6,100 00
Registered-package envelopes, locks, and seals	40,000 00
Post-office and dead-letter envelopes	25,000 00
Ship, steamboat, and way letters	6,000 00
Engraving, printing, and binding drafts and warrants	1,500 00

OFFICE OF SUPERINTENDENT OF FOREIGN MAILS.

Transportation of foreign mails	250,000 00
Balance due foreign countries, including the United States portion of the expenses of the international office, organized under the provisions of article 15 of the general postal union treaty concluded at Berne, October 9, 1874	40,000 00
	36,427,771 00

Estimated amount which will be provided by the department from its own revenue accruing from postages and other sources, viz:

Ordinary revenues	$27,798,098 28	
Money-order receipts	200,000 00	
Official postages	1,036,000 00	
		29,034,098 28
Leaving a deficiency in the revenue of the Post-Office Department, to be provided for out of the general treasury		7,393,672 72
Official stamps and stamped envelopes for the use of the Post-Office Department during the year		700,000 00

A. D. HAZEN,
Third Assistant Postmaster-General.

OFFICE OF THIRD ASSISTANT POSTMASTER-GENERAL,
Washington, D. C., October 21, 1877.

No. 1 *a*.

POST-OFFICE DEPARTMENT,
OFFICE OF THE CHIEF CLERK TO THE POSTMASTER-GENERAL,
Washington, D. C., September 7, 1877.

SIR: In compliance with your request of August 25, I have the honor to submit the estimates called for, as follows, viz:

For "mail depredations and special agents"	$150,000
For "preparation and publication of post-route maps"	45,000
For advertising	75,000
For miscellaneous items in the office of the Postmaster-General	1,500

The estimates for "mail depredations, &c.," and for preparation and publication of post-route maps, are accompanied by explanations from the chiefs of the divisions under whose supervision the expenditures are made.

With reference to the estimate for advertising, it is proper to say that it is based upon the presumption that Congress will, at its next session, repeal the law fixing rates for the payment of newspapers for official advertising. (*Vide* sec. 853, Revised Statutes.) Experience has shown that the amount therein provided for is entirely inadequate for the purpose, and the department suffers great inconvenience from the refusal of newspaper publishers to insert advertisements at the price fixed.

I refrain from entering into details upon this subject for the reason that it will be brought to the attention of Congress by a communication addressed to the proper committee.

Very respectfully,

W. A. KNAPP,
Chief Clerk.

Hon. A. D. HAZEN,
Third Assistant Postmaster-General.

No. 1 *b*.

POST-OFFICE DEPARTMENT,
OFFICE CHIEF OF DIVISION
SPECIAL AGENTS AND MAIL DEPREDATIONS,
Washington, September 7, 1877.

SIR: In reply to your communication of the 27th ultimo, I have the honor to say that the estimate for expenses of the division of special agents and mail depredations for the year ending June 30, 1879, is one hundred and fifty thousand ($150,000) dollars, including the amount which it may be necessary to expend for fees to United States attorneys, marshals, clerks of courts, and counsel, necessarily employed by special agents of the Post-Office Department, subject to approval by the Attorney-General.

The importance of this branch of the service is becoming daily more apparent as the operations of the department are being more widely extended.

More special agents than the number now upon the list might have been employed with great advantage to the service, but a determination on the part of the Postmaster-General to keep within the sum appropriated for the year ending on 30th June, 1877, ($150,000,) and the caution

consequently exercised, leaves a small unexpended balance, which will be covered into the treasury.

The amount appropriated for the current year ($135,000) is deemed inadequate for the service, but the necessary care will be exercised to keep the expenditures within the prescribed limit.

Very respectfully, your obedient servant,

C. COCHRAN, JR.,
Chief of Division.

W. A. KNAPP, Esq.,
Chief Clerk Post-Office Department.

No. 1 *c.*

POST-OFFICE DEPARTMENT, TOPOGRAPHER'S OFFICE,
Washington, D. C., October 6, 1877.

SIR: I respectfully submit that in the estimates of appropriations required for the fiscal year ending June 30, 1879, there be inserted this item, with the attached clause authorizing the sale of maps, (same as in the act of Congress, March 3, 1877, "making appropriations for the service of the Post-Office Department," &c.:)

For preparation and publication of post-route maps, including constant revision of former editions and furnishing maps, diagrams, and other information by the topographer and assistants, forty-five thousand ($45,000) dollars; and the Postmaster-General may authorize the publication and sale of said maps to individuals at the cost thereof, the proceeds of said sales to be applied as a further appropriation for said purpose.

In submitting the present estimate, I have the honor to present for your consideration the restoration of our working force, and, thereby, our availability for performing the work required for the department's service, which service has been constantly increasing since the reduction of our force, and I am prepared to furnish the information in detail that may be desired for a full understanding of this special work.

The sum above estimated will cover the salaries of draughtsmen employed on current and on new work, the engraving, lithographing, and photolithographing, the printing, coloring, mounting, and backing maps, the purchase of copper-plates, lithographic stones where requisite, map-paper and other materials used, the purchase of technical books, atlases and maps for reference, the payment of clerical force, and other incidentals.

The work of the topographer's office is so varied in its nature, that fuller details must be sought in my special report to you on the subject.

Respectfully submitted.

W. L. NICHOLSON,
Topographer Post-Office Department.

Hon. D. M. KEY,
Postmaster-General.

The proceeds of sales of maps during the fiscal year ending June 30, 1877, were $666.58.

This amount, deposited in the United States treasury, was drawn upon and used "as a further appropriation" in the "preparation and publication of post-route maps," as allowed by the law, act July 12, 1876.

W. L. N.

Estimate of appropriation required for the service of the Topographer's office, Post Office Department, under the head, "For preparation and publication of post-route maps, &c.," for the fiscal year ending June 30, 1879.

For salaries	$26,440
For engraving new maps and altering old plates	6,300
For lithographing and photolithographing, (including changes of old work)	5,800
For printing maps from engravings and lithographs	2,000
For map-paper, copper-plates, and lithographic stones	1,200
For electrotype-duplicating the original engraved copper-plates for their preservation	1,400
For backing, mounting, and binding maps	900
For drawing materials, purchase of maps, atlases, books, &c.	490
For miscellaneous contingencies	470
	45,000

No. 1 *d.*

POST-OFFICE DEPARTMENT, APPOINTMENT OFFICE,
Washington, D. C., October 20, 1877.

SIR: Agreeably to your request, I submit herewith estimates of the appropriations necessary for the fiscal year ending June 30, 1879, under the following heads, viz:

For compensation to postmasters	$7,500,000
For clerks in post-offices	3,700,000
For letter-carriers	2,100,000
For wrapping-paper	25,000
For twine	50,000
For marking and rating stamps	12,000
For letter balances and scales	5,000
For rent, fuel, and light	450,000
For office furniture	30,000
For stationery	55,000
For miscellaneous and incidental items	145,000
Making in the aggregate	14,072,000

In submitting the above estimates, I have to say that they are substantially the same as those presented for these items last year; and I cannot well perceive how the interests of the postal service, so far as they relate to this bureau, can be properly administered if smaller amounts are appropriated. The experience of the past fiscal year has demonstrated that only by the strictest economy, and also by the denial of many postal facilities which seemed particularly necessary, could the expenditures for the most of the different items be kept within the limits of the reduced appropriations for the same; and, even with the utmost care, there is a deficiency in the item of postmasters' salaries. I therefore have to urge a more liberal appropriation for the various items above mentioned than that granted for the last or present fiscal year, in order that the interests of a service which is constantly expanding, and the business and other diversified affairs of a wide-spread population, may be properly cared for.

Accompanying this is a tabular statement, marked "A," giving more definite information.

Yours, very respectfully,

JAS. N. TYNER,
First Assistant Postmaster-General.

Hon. A. D. HAZEN,
Third Assistant Postmaster-General.

A.—*Statement showing the increase or decrease per centum, for the items named below, of the appropriations for the fiscal years ending June* 30, 1877, *and June* 30, 1878, *as compared with the estimates for the fiscal year ending June* 30, 1879; *also the increase or decrease per centum, for the same items, of the expenditures for the fiscal year ending June* 30, 1877, *as compared with the estimates for the fiscal year ending June* 30, 1879.

Items.	Appropriation for the fiscal year ended June 30, 1877.	Estimate for the fiscal year ending June 30, 1879.	Per centum of increase or decrease of estimates for 1878–1879 over appropriation for 1876–1877.		Appropriation for the fiscal year ending June 30, 1878.	Estimate for the fiscal year ending June 30, 1879.	Per centum of increase or decrease of estimates for 1878–1879 over appropriation for 1877–1878.		Expended during the fiscal year ended June 30, 1877.	Per centum of increase or decrease of estimates for 1878–1879 over expenditures for 1876–1877.	
			Increase.	Decrease.			Increase.	Decrease.		Increase.	Decrease.
For compensation to postmasters	$7, 000, 000	$7, 500, 000	7. 14	.....	$7, 250, 000	$7, 500, 000	3. 44	.....	$7, 284, 283 36	2. 96	.....
For clerks in post-offices	3, 290, 000	3, 700, 000	12. 46	.....	3, 340, 000	3, 700, 000	10. 77	.....	3, 233, 151 60	14. 43	.....
For letter-carriers	1, 900, 000	2, 100, 000	10. 52	.....	1, 825, 000	2, 100, 000	15. 06	.....	1, 893, 595 58	10. 63	.....
For wrapping-paper	20, 000	25, 000	25. 00	.....	22, 500	25, 000	11. 11	.....	17, 207 50	45. 28	.....
For twine	50, 000	50, 000	.....	.....	50, 000	50, 000	.....	.....	38, 771 17	28. 96	.....
For marking and rating stamps	10, 000	12, 000	20. 00	.....	9, 000	12, 000	33. 33	.....	9, 994 98	21. 00	.....
For letter balances and scales	5, 000	5, 000	.....	.....	5, 000	5, 000	.....	.....	2, 773 50	80. 27	.....
For rent, fuel, and light	390, 000	450, 000	15. 30	.....	400, 000	450, 000	12. 5	.....	373, 694 54	20. 41	.....
For office furniture	20, 000	30, 000	50. 00	.....	20, 000	30, 000	50. 00	.....	7, 049 59	325. 00	.....
For stationery	50, 000	55, 000	10. 00	.....	55, 000	55, 000	.....	.....	43, 427 46	26. 64	.....
For miscellaneous and incidental items	75, 000	145, 000	93. 33	.....	80, 000	145, 000	81. 25	.....	64, 266 64	125. 00	.....
Total	12, 810, 000	14, 072, 000	9. 85	.....	13, 056, 500	14, 072, 000	7. 77	.....	12, 968, 215 92	8. 51	.....

No. 1 *e*.

POST-OFFICE DEPARTMENT, OFFICE OF THE
SECOND ASSISTANT POSTMASTER-GENERAL,
Washington, D. C., October 8, 1877.

SIR: In compliance with your request of August 25, 1877, I herewith furnish the estimates for inland transportation, and items incident thereto, for the fiscal year ending June 30, 1879.

Very respectfully, your obedient servant,

THOS. J. BRADY,
Second Assistant Postmaster-General.

Hon. A. D. HAZEN,
Third Assistant Postmaster-General.

Cost of inland transportation, and the items incident thereto, for the years 1876 and 1877, with the appropriation for 1878, and the estimates of the amounts necessary to be appropriated for 1879; showing the percentage of increase and decrease, with the cost, appropriation, and estimate for mail locks and keys, mail-bags and mail-bag catchers.

Object.	Cost for 1876.	Cost for 1877.	Per centum increase or decrease of 1877 as to 1876.		Appropriation for 1878.	Per centum increase or decrease of appropriation of 1878 as to cost of 1877.		Estimate for 1879.	Per centum increase or decrease as to appropriation for 1878.	
			Increase.	Decrease		Increase.	Decrease.		Increase.	Decrease.
Inland transportation, railroad	$9,543,134 00	$9,053,936 00	.....	5⅛	$9,250,000 00	2⅛	.....	$10,140,126 00	9.62	.....
Inland transportation, other than railroad	5,658,006 00	6,330,959 00	11.88	.....	6,237,993 00	.....	1.47	7,090,673 00	13.66	.....
Railway post-office clerks	1,278,340 00	1,222,690 00	.....	4.35	1,225,000 00	0.19	.....	1,385,000 00	13.06	.....
Route-agents	975,280 00	994,540 00	1.97	.....	1,000,000 00	0.55	.....	1,070,000 00	7.	.....
Mail-route messengers	145,610 00	162,086 00	11.3	.....	150,000 00	.....	7.45	171,000 00	14.	.....
Local agents	104,910 00	105,530 00	.....	0.59	110,000 00	4.23	.....	125,000 00	13.63	.....
Mail messengers	655,768 00	659,497 00	0.57	.....	670,000 00	1.59	.....	692,472 00	3.35	.....
Mail locks and keys	16,720 00	13,475 00	.....	19.4	16,000 00	18.73	.....	15,000 00	.....	6.25
Mail-bags and mail-bag catchers	208,847 49	165,641 29	.....	20.68	200,000 00	20.74	.....	200,000 00	.....	.....
Total	.....	.....	.....	.....	18,858,993 00	.....	.....	20,889,271 00	10.76	.....

NOTE.—The above estimates are based upon the contract prices and annual salaries without reference to fines and deductions. This will explain the apparent discrepancy between this table and the Auditor's statement.

THOS. J. BRADY,
Second Assistant Postmaster-General.

No. 1 *f*.

Explanation of estimates of appropriations for the office of Third Assistant Postmaster-General.

I.—ADHESIVE POSTAGE-STAMPS.

For manufacture of adhesive postage-stamps, of official stamps, and of newspaper and periodical stamps	$85,000 00
The number of ordinary postage-stamps issued during the fiscal year ended June 30, 1877, was	689,580,670
Add 10 per cent. for estimated increase	68,958,067
Gives estimated issue for fiscal year ending June 30, 1878	758,538,737
Add 10 per cent., as before	75,853,873
Gives estimated issue of ordinary stamps for fiscal year ending June 30, 1879	834,392,610
Cost of manufacturing that number at present contract price, 9.98 cents per thousand	$83,272 38
Add estimated cost of manufacturing official and newspaper and periodical stamps	2,000 00
Gives estimated total cost of manufacturing adhesive postage-stamps during fiscal year ending June 30, 1879	85,272 38

The above estimate will explain itself. For reasons which need not be stated here, the issue of ordinary stamps for the last fiscal year, so far from showing the usual increase, were slightly decreased, as compared with the previous year; and they accordingly form a low basis upon which to estimate future issues. It is therefore thought best to estimate the increase at 10 per cent., although the average annual rate of increase for several years past has been somewhat less than that.

Upon a close estimate it is believed that $2,000 will be sufficient for the manufacture of official and of newspaper and periodical stamps. It will probably be safe to put the entire amount of the appropriation in round figures at $85,000.

The amount appropriated for the present fiscal year was $150,000, based upon the contract prices in force when the estimate was made; and the present reduction is owing to the better rates obtained in a new contract which commenced on the 1st May last, to continue for four years. So advantageous is the new contract that, notwithstanding the estimate allows for an increase of 10 per cent. in the number of stamps required for the next fiscal year, the cost of manufacture will be $65,000, or 43⅓ per cent., less than the current appropriation, a large portion of which will, of course, remain unexpended.

II.—POSTAGE-STAMP AGENCY.

For pay of agent and assistants to distribute stamps, and expenses of the agency. $8,100

This estimate exceeds the present appropriation by $1,200, and contemplates the employment of additional help, which is required not only by the general increase of business, but to provide additional checks to secure a proper accountability for the stamps manufactured by the contractors. It is desired to have the spoiled stamps counted by the force under the government agent after they are turned over to him for destruction, which he is now unable to do for want of sufficient clerical help. This course was recommended by a committee of post-office offi-

cials who recently made an examination into the condition of affairs at the manufactory. As the spoiled work represents not less than 6 per cent. of the entire production, or say about $1,173,000 per annum, the importance of rectifying the omission will be readily apparent.

III.—STAMPED ENVELOPES AND WRAPPERS.

For manufacture of stamped envelopes and newspaper-wrappers	$547,000 00
The cost of stamped envelopes and newspaper-wrappers, both ordinary and official, issued during the year ended June 30, 1877, at present contract prices, was	$436,224 63
Add 12 per cent. for estimated increase	52,346 95
Gives estimated cost for year ending June 30, 1878	488,571 58
Add 12 per cent. for increase, as before	58,628 59
Gives estimated cost of manufacture for year ending June 30, 1879	547,200 17

In making this estimate, the same rule is pursued as in the case of adhesive postage-stamps; but owing to the greater popularity of stamped envelopes, the ratio of increase is larger. Judging from the issues for several years prior to July 1, 1876, it is not unreasonable to expect an increase of 12 per cent. per annum, and this rate is accordingly taken in making the present estimate, notwithstanding that the increase during the last fiscal year was not up to this standard, through the same causes that led to a decrease in the issue of adhesive postage-stamps. The average rate of increase in the issues of stamped envelopes for the six years ending June 30, 1876, was 11½ per cent.

The present contract will expire on the 30th September, 1878, three months after the commencement of the fiscal year for which the appropriation is asked; and while there will probably be some reduction in the rates under a new contract, it is thought safest to estimate at present prices.

It is suggested that the amount of the appropriation be placed in even figures at $547,000. This amount is $53,000 less than the appropriation for the present fiscal year. Whatever may be the actual cost of manufacture, it will be refunded to the government, as by law it is added to the postage value of the envelopes in fixing the schedule of prices to the public.

IV.—STAMPED-ENVELOPE AGENCY.

For pay of agent and assistants to distribute stamped envelopes and newspaper-wrappers, and expenses of agency	$16,300 00

This estimate is the same as was made last year, and also agrees with the previous appropriations made since the agency was first established. For some cause the appropriation for the current fiscal year was reduced to $14,150—an amount insufficient to properly conduct the business of the agency. Besides the natural increase of business growing out of the constantly increasing issues of stamped envelopes, there was a considerable addition by the transfer from New York to Hartford, on the 1st of July, of the contract for registered-package, post-office, and dead-letter envelopes, the work attending which was thus thrown upon this agency. As a consequence, it became necessary to make a detail from the Hartford post-office to assist in that branch of the agency devoted purely to post-office work, (the registration of packages,) it having been explained in the report of last year that the envelopes and wrappers are

mailed directly from the agency, (on account of its proximity to the railroad depot,) instead of going through the Hartford post-office. In view of the facts, it is recommended that the appropriation be restored to the original figures of $16,300.

V.—POSTAL CARDS.

For manufacture of postal cards	$170,000 00
Number of postal cards issued during fiscal year ending June 30, 1877	170,015,500
Add 20 per cent. for increase	34,003,100
Gives estimated issue for year ending June 30, 1878	204,018,600
Add 20 per cent. for increase, as before	40,803,720
Gives estimated issue for year ending June 30, 1879	244,822,320
Cost of manufacturing that number at present contract price of 69.56 cents per thousand	$170,298 40

The average rate of increase in the issue of postal cards for the three years ending June 30, 1877, was nearly 24 per cent. During the last fiscal year the increase was exceptionally low, being a little less than 13 per cent. The issues for the quarter ending September 30, 1877, show an increase of over 21 per cent. as compared with the corresponding quarter of the previous year. It would hardly appear safe now to base the estimate on less than 20 per cent., which has accordingly been done above. The appropriation for the present fiscal year is $300,000, which was made upon the basis of the contract prices in force when the appropriation was made; but under a new contract, entered into on the 1st of July last, for four years, the cards are now being furnished at about one-half the old rates. While, therefore, the estimate contemplates an increase of 20 per cent. in the issues, it aggregates $130,000, or 43.3 per cent., less than the current appropriation.

VI.—POSTAL-CARD AGENCY.

For pay of agent and assistants to distribute postal cards, and expenses of agency	$6,100 00

This amount agrees with the present appropriation; and it is believed that it can be made to suffice for the purpose for which it is asked, despite the increase shown in the postal-card business.

VII.—REGISTERED-PACKAGE ENVELOPES, LOCKS, AND SEALS.

For registered-package envelopes, locks, and seals	$40,000 00

This estimate is the same in amount with the present appropriation. The amount expended in the purchase of these articles during the year ended June 30, 1877, was $35,548.04, which, considering the natural growth of the registry system, shows that the estimate is not too large.

VIII.—POST-OFFICE AND DEAD-LETTER ENVELOPES.

For post-office envelopes, and for dead-letter envelopes	$25,000 00

This amount is the same as in current appropriation, and is considered sufficient. As in the case of registered-package envelopes, the contract for these articles is let for one year only, and the present rates are exceedingly low.

IX.—SHIP, STEAMBOAT, AND WAY LETTERS.

For ship, steamboat, and way letters $6,000 00

By law (sections 3913, 3976, 3977, and 3978, Revised Statutes,) this appropriation is necessary for the payment to masters or owners of vessels not regularly engaged in transporting the mails, for letters brought and delivered to post-offices, on arrival in port, for transmission to destination. The parties receiving the letters are required to pay, in addition to the regular postage, the amounts paid to said masters or owners, which amounts are consequently refunded to the department. From an examination of actual payments made for a considerable period back, it is believed that an appropriation of $6,000 will be amply sufficient. The current appropriation is $7,500.

X.—ENGRAVING, PRINTING, AND BINDING DRAFTS AND WARRANTS.

For engraving, printing, and binding drafts and warrants $1,500 00

This amount is for the blank drafts and warrants used in paying contractors and others, and is the same as the current appropriation.

Comparison of estimates with present appropriations.

Items.	Estimate for fiscal year ending June 30, 1879.	Appropriation for fiscal year ending June 30, 1878.	Decrease of estimates.	
			Amount.	Per cent.
For manufacture of adhesive stamps, of official and of newspaper and periodical stamps	$85,000	$150,000	$65,000	43.3
For pay of agent and assistants to distribute stamps, and expenses of the agency	8,100	6,900	*1,200	.....
For manufacture of stamped envelopes and newspaper-wrappers	547,000	600,000	53,000	8.8
For pay of agent and assistants to distribute stamped envelopes and newspaper-wrappers	16,300	14,150	*2,150	.....
For manufacture of postal cards	170,000	300,000	130,000	43.3
For pay of agent and assistant to distribute postal cards	6,100	6,100	.....	.....
For registered-package envelopes, locks, and seals	40,000	40,000	.....	.....
For post-office envelopes and for dead-letter envelopes	25,000	25,000	.....	.....
For ship, steamboat, and way letters	6,000	7,500	1,500	20.0
For engraving, printing, and binding drafts and warrants	1,500	1,500	.....	.....
Totals and net decrease of estimates	905,000	1,151,150	246,150	21.3

* Increase.

It will be observed from the foregoing that the net decrease of the estimates from existing appropriations is $246,150, or 21.3 per cent.; and the only items showing an increase are those for maintaining the postage-stamp and stamped-envelope agencies; the estimate for the latter of which, however, agrees with appropriations made prior to the present fiscal year.

As already explained, the cost of manufacturing stamped envelopes is refunded to the department when the envelopes are sold to the public; and deducting the amount estimated for this item, with those for the stamped-envelope agency, and for ship, steamboat, and way letters, also refunded, leaves the estimated net cost to the revenues for maintaining the service of this office at $335,700.

Respectfully submitted to the Postmaster-General.

A. D. HAZEN,
Third Assistant Postmaster-General.

OFFICE OF THIRD ASSISTANT POSTMASTER-GENERAL,
Washington, D. C., October 1, 1877.

No. 1 *g*.

POST-OFFICE DEPARTMENT, OFFICE OF FOREIGN MAILS,
Washington, D. C., August 30, 1877.

SIR: I transmit herewith, agreeably to the request made in your letter of the 25th instant, an estimate of the amount required to be appropriated for the foreign mail-service during the fiscal year ending June 30, 1879, as follows, viz:

For foreign mail-transportation	$250,000 00
For balances due foreign countries, including the United States portion of the expense of the international office, organized under the provisions of article 15 of the general postal-union treaty concluded at Berne October 9, 1874	40,000 00

I am, very respectfully, your obedient servant,
JOSEPH H. BLACKFAN,
Superintendent.

HON. A. D. HAZEN,
Third Assistant Postmaster-General.

No. 2.—*Estimate of indebtedness of the Post-Office Department for the fiscal year ended June* 30, 1877, *not yet adjusted.*

Mail-service under contract or recognized, but not yet reported for payment		$122,354 43
Mail-service unrecognized:		
Fiscal year ended June 30, 1875	$146,551 00	
Fiscal year ended June 30, 1876	157,918 31	
Fiscal year ended June 30, 1877	218,249 72	
		522,719 03
		645,073 46

A. D. HAZEN,
Third Assistant Postmaster-General.

No. 3.—*Statement exhibiting the receipts and expenditures, under appropriate heads, by quar- and June*

RECEIPTS.

	Quarter ended September 30, 1876.	Quarter ended December 31, 1876.	Quarter ended March 31, 1877.	Quarter ended June 30, 1877.
Letter-postage paid in money	$46,358 36	$45,640 46	$55,101 68	$94,257 76
Book, newspaper, and pamphlet postage	.....	.....	.....	.....
Box-rents and branch offices	331,972 37	329,838 56	330,056 13	330,101 02
Fines and penalties	4,319 08	1,260 06	1,872 48	90 00
Postage-stamps, stamped envelopes, newspaper wrappers, and postal cards	6,087,588 30	6,382,531 65	6,828,111 41	6,459,921 40
Dead letters	1,393 50	1,397 00	771 00	1,379 00
Revenue from money-order business	.....	.....	.....	109,148 01
Revenue from money-order business, international, June 30, 1875	63,261 84	.....	.....	.....
Miscellaneous	4,272 93	9,338 95	5,380 79	6,853 52
	6,539,171 38	6,770,009 68	7,221,293 49	7,001,110 71

Comparison, including revenue from money-order business and official stamps:
Decrease of receipts from year ended June 30, 1876, $1,112,612.4, or 4.0 + per cent.
Increase of receipts over year ended June 30, 1875, $740,224.67, or 2.6 + per cent.

EXPENDITURES.

Compensation of postmasters	1,774,397 77	1,755,252 03	1,889,988 67	1,864,644 89
Additional compensation to postmasters	.....	.....	.....	.....
Compensation of clerks for post-offices	800,611 90	803,933 54	809,738 22	818,868 04
Compensation of letter-carriers, and incidental expenses	474,645 61	471,715 49	418,569 88	528,664 60
Wrapping-paper	6,000 00	4,912 50	3,335 00	2,960 00
Twine	16,919 00	11,320 17	8,740 00	1,792 00
Postmarking and ancelling stamps	4,662 25	1,851 46	3,202 42	278 85
Letter-balances	2,200 00	573 50	.....	.....
Rent, light, and fuel for post-offices	86,824 08	93,149 63	92,880 64	100,840 19
Stationery	8,150 85	9,014 84	15,169 17	11,092 60
Furniture for post-offices	806 06	1,767 14	1,048 32	3,445 57
Miscellaneous—Office of First Assistant Postmaster-General	14,162 03	15,477 28	15,964 78	18,662 55
Inland-mail transportation—railroad	1,883,562 45	2,348,245 94	2,192,067 55	2,277,157 17
Inland-mail transportation—star	1,400,067 89	1,434,221 14	1,441,034 23	1,564,324 08
Compensation of railway-post-office clerks	309,384 73	302,390 22	307,344 02	304,450 44
Compensation of route-agents	235,615 84	239,496 25	237,904 37	246,644 40
Compensation of mail-route messengers	36,251 77	35,530 95	36,041 74	39,774 15
Compensation of local agents	25,636 90	26,079 51	26,449 14	27,553 15
Compensation of mail-messengers	158,296 33	166,303 96	164,705 13	169,885 23
Mail-locks and keys	1,912 50	.....	1,875 00	11,600 00
Mail-bags and catchers	42,326 53	66,772 16	33,604 60	23,327 47
Post-route maps	11,446 74	3,801 14	5,418 70	.....
Mail depredations and special agents	51,779 20	38,687 20	38,086 69	10,049 18
Postage-stamps	47,944 29	30,448 20	22,808 36	8,988 65
Distribution of postage-stamps	2,333 25	1,635 35	1,951 95	508 21
Stamped envelopes and newspaper wrappers	174,565 37	111,607 22	112,159 75	29,892 29
Distribution of stamped envelopes and newspaper wrappers	4,437 96	3,615 61	2,741 99	1,285 58
Postal cards	77,728 52	58,786 65	61,487 71	28,461 06
Distribution of postal cards	1,686 74	1,486 94	638 64	451 78
Registered-package envelopes, locks, and seals	6,347 96	6,456 36	8,733 04	14,340 68
Official envelopes for postmasters	3,514 26	3,211 41	3,704 61	5,682 49
Dead-letter envelopes	.....	59 60	447 00	6 70
Ship, steamboat, and way letters	1,305 52	842 61	769 79	987 32
Fees to United States marshals, attorneys, clerks of courts, and counsel	294 30	1,294 03	488 90	581 79
Engraving, printing, and binding drafts and warrants	1 07	407 55	109 00	727 70
Advertising	3,682 30	7,984 19	8,157 95	3,006 71
Miscellaneous—Office of the Postmaster-General	.....	33 00	54 10	93 60
Foreign-mail transportation	49,966 94	54,415 44	60,966 04	48,186 34
Balances due foreign countries	.....	2,367 99	15,035 86	5,336 04
Official postal-guides	8,291 57	1,772 18	8,078 06	1,770 87
Subsidy—San Francisco, Japan, and China line	125,000 00	125,000 00	.....	.....
	7,852,760 38	8,241,920 47	8,051,501 02	8,176,322 37

ters, for the fiscal year ended June 30, 1877, *compared with fiscal years ended June* 30 1876, 30, 1875.

RECEIPTS.

Total year ended June 30, 1877.	Total expenditures on account of previous fiscal years.	Total year ended June 30, 1876.	Compared with year ended June 30, 1876.		Total year ended June 30, 1875.	Compared with year ended June 30, 1875.	
			Increase.	Decrease.		Increase.	Decrease.
$241, 358 26	.....	$224, 792 37	$16, 565 89	.....	$286, 969 04	.....	$45, 610 78
.....	.....	211 06	.....	$211 06	579, 364 95	.....	579, 364 95
1, 321, 968 08	.....	1, 305, 927 05	16, 041 03	.....	1, 270, 554 23	$51, 413 85	.....
7, 541 62	.....	3, 358 01	4, 183 61	.....	14, 286 29	.....	6, 744 67
25, 757, 515 76	.....	26, 879, 512 10	.....	1, 121, 996 34	24, 490, 942 23	1, 266, 573 53	.....
4, 945 50	.....	9, 889 20	.....	4, 943 70	9, 180 00	.....	4, 234 50
109, 148 01	.....	190, 770 84	.....	81, 622 83	120, 142 09	.....	10, 994 08
63, 261 84	.....	.....	63, 261 84	.....	.....	63, 261 84	.....
25, 846 19	.....	29, 736 87	.....	3, 890 68	19, 921 76	5, 924 43	.....
27, 531, 585 26	.....	28, 644, 197 50	100, 052 37	1, 212, 664 61	26, 791, 360 59	1, 387, 173 65	646, 948 98
		27, 531, 585 26	.....	100, 052 37	27, 531, 585 26	646, 948 98	.....
		1, 112, 612 24	.....	1, 112, 612 24	740, 224 67	740, 224 67	.....

Comparison, excluding revenue from money-order business and official postage stamps:
Decrease of receipts from year ended June 30, 1876, $569,471 92, or 2 0 + per cent.
Increase of receipts over year ended June 30, 1875, $197.084.35, or 7.1 + per cent.

EXPENDITURES.

7, 284, 283 36	10, 759 57	7, 397, 397 91	.....	.....	7, 049, 935 77	.....	.....
.....	208 00	1, 175 43	.....	.....	298, 187 33	.....	.....
3, 233, 151 60	1, 775 47	3, 480, 730 15	.....	.....	3, 414, 811 26	.....	.....
1, 893, 595 58	.....	1, 980, 795 02	.....	.....	1, 879, 210 11	.....	.....
17, 207 50	.....	18, 207 02	.....	.....	11, 567 10	.....	.....
38, 771 17	.....	38, 718 29	.....	.....	43, 811 57	.....	.....
9, 994 98	.....	8, 857 90	.....	.....	5, 943 28	.....	.....
2, 773 50	.....	3, 907 39	.....	.....	19, 449 24	.....	.....
372, 094 54	278 62	390, 422 77	.....	.....	389, 648 85	.....	.....
43, 427 46	24 50	43, 312 83	.....	.....	39, 427 61	.....	.....
7, 067 09	46 10	19, 499 27	.....	.....	16, 864 31	.....	.....
64, 266 64	179 90	76, 022 66	.....	.....	.....	.....	.....
8, 701, 033 11	1, 063, 961 77	14, 745, 845 95	.....	.....	18, 777, 201 20	.....	.....
5, 839, 647 34	64, 827 10	.....	.....	.....	.....	.....	.....
1, 223, 569 41	.....	1, 223, 750 19	.....	.....	.....	.....	.....
959, 660 86	.....	940, 151 97	.....	.....	.....	.....	.....
147, 598 61	.....	147, 152 27	.....	.....	.....	.....	.....
105, 718 70	.....	101, 813 27	.....	.....	.....	.....	.....
659, 190 65	9, 027 35	632, 648 03	.....	.....	.....	.....	.....
15, 387 50	.....	15, 709 70	.....	.....	31, 811 42	.....	.....
166, 030 76	.....	206, 517 49	.....	.....	187, 148 08	.....	.....
20, 666 58	.....	23, 662 92	.....	.....	30, 357 91	.....	.....
138, 602 27	116 00	118, 676 94	.....	.....	150, 693 77	.....	.....
110, 189 59	3, 550 00	120, 788 08	.....	.....	.....	.....	.....
6, 428 76	.....	5, 050 85	.....	.....	.....	.....	.....
428, 224 63	1, 528 60	358, 600 14	.....	.....	724, 186 84	.....	.....
12, 081 14	.....	10, 021 16	.....	.....	.....	.....	.....
226, 463 94	.....	182, 122 79	.....	.....	.....	.....	.....
4, 264 10	.....	4, 027 84	.....	.....	.....	.....	.....
35, 878 04	.....	32, 167 59	.....	.....	.....	.....	.....
16, 112 77	.....	15, 423 31	.....	.....	.....	.....	.....
513 30	.....	2, 279 40	.....	.....	2, 312 42	.....	.....
3, 905 24	22 38	4, 071 83	.....	.....	3, 753 18	.....	.....
2, 659 02	348 60	4, 903 28	.....	.....	.....	.....	.....
1, 245 32	.....	1, 751 0	.....	.....	.....	.....	.....
22, 831 15	12 50	86, 855 14	.....	.....	168, 381 20	.....	.....
180 70	7 75	1, 620 51	.....	.....	178, 434 53	.....	.....
213, 534 76	7, 143 99	229, 123 26	.....	.....	.....	.....	.....
22, 739 89	.....	33, 253 20	.....	.....	181, 732 52	.....	.....
19, 912 68	.....	18, 952 83	.....	.....	6, 450 00	.....	.....
250, 000 00	.....	537, 500 00	.....	.....	.....	.....	.....
32, 322, 504 24	1, 163, 818 20	33, 263, 487 58	.....	.....	33, 611, 309 45	.....	.....

A. D. HAZEN,
Third Assistant Postmaster-General.

No. 4.—*Receipts and disbursements at treasury*

Depositories.	Deposits.	Grants from treasury.	By transfer.	Aggregate accumulation.	Aggregate receipts.
Treasurer U. S., Washington, D. C	$472, 227 56	.....	$1,749,733 68	$2,221,961 24	$472, 227 56
Asst. treasurer U. S., Baltimore, Md	167, 059 26	.....	75, 000 00	242, 059 26	167, 059 26
Asst. treasurer U. S., Boston, Mass	550, 473 30	.....	.....	550, 473 30	550, 473 30
Asst. treasurer U. S., Charleston, S. C	3, 204 41	.....	75, 000 00	78, 204 41	3, 204 41
Asst. treasurer U. S., Chicago, Ill	229, 429 55	.....	925, 000 00	1, 154, 429 55	229, 429 55
Asst. treasurer U. S., Cincinnati, Ohio	223, 023 76	.....	75, 000 00	298, 023 76	223, 023 76
Asst. treasurer U. S., New Orleans, La	87, 109 70	.....	350, 000 00	437, 109 70	87, 109 70
Asst. treasurer U. S., New York, N. Y	2, 265, 014 48	$6,108,488 87	.....	8, 373, 503 35	8, 373, 503 35
Asst. treasurer U. S., Philadelphia, Pa	570, 162 82	.....	.....	570, 162 82	570, 162 82
Asst. treasurer U. S., San Francisco, Cal	357, 192 03	.....	25, 000 00	382, 192 03	357, 192 03
Asst. treasurer U. S., Saint Louis, Mo	262, 051 01	.....	825, 000 00	1, 087, 051 01	262, 051 01
Designated depository, Buffalo, N. Y	.....	.....	.....	.....	.....
Designated depository, Sante Fé, N. Mex	.....	.....	.....	.....	.....
Designated depository, Tucson, Ariz	2, 636 91	.....	.....	2, 636 91	2, 636 91
First Nat'l Bank, Dubuque, Iowa	.....	.....	.....	.....	.....
First Nat'l Bank, Galveston, Tex	1, 189 09	.....	.....	1, 189 09	1, 189 09
First Nat'l Bank, Leavenworth, Kans	2, 399 99	.....	.....	2, 399 99	2, 399 99
First Nat'l Bank, Memphis, Tenn	.....	.....	.....	.....	.....
First Nat'l Bank, Milwaukee, Wis	258 04	.....	.....	258 04	258 04
First Nat'l Bank, Nashville, Tenn	449 29	.....	.....	449 29	449 29
First Nat'l Bank, Portland, Oreg	2, 080 02	.....	.....	2, 080 02	2, 080 02
First Nat'l Bank, Portsmouth, N. H	.....	.....	.....	.....	.....
First Nat'l Bank, Providence, R. I	40 00	.....	.....	40 00	40 00
First Nat'l Bank, Richmond, Va	.....	.....	.....	.....	.....
First Nat'l Bank, Springfield, Ill	142 57	.....	.....	142 57	142 57
First Nat'l Bank, Saint Paul, Minn	792 73	.....	.....	792 73	792 73
First Nat'l Bank, Yankton, Dak	.....	.....	.....	.....	.....
Second Nat'l Bank, Detroit, Mich	.....	.....	.....	.....	.....
Merchants' Nat'l Bank, Cleveland, Ohio	.....	.....	.....	.....	.....
Merchants' Nat'l Bank, Little Rock, Ark	922 65	.....	.....	922 65	922 65
Merchants' Nat'l Bank, Portland, Me	75 80	.....	.....	75 80	75 80
Merchants' Nat'l Bank, Savannah, Ga	98 38	.....	.....	98 38	98 38
Atlanta Nat'l Bank, Atlanta, Ga	1, 794 03	.....	.....	1, 794 03	1, 794 03
Charter Oak Nat'l Bank, Hartford, Conn	115 00	.....	.....	115 00	115 00
City Nat'l Bank, Grand Rapids, Mich	276 24	.....	.....	276 24	276 24
Colorado Nat'l Bank, Denver, Colo	.....	.....	.....	.....	.....
East Tenn. Nat'l Bank, Knoxville, Tenn	255 00	.....	.....	255 00	255 00
Exchange Nat'l Bank, Norfolk, Va	2, 114 68	.....	.....	2, 114 68	2, 114 68
Farmers' and Mechanics' Nat'l Bank, Buffalo, N. Y	49 25	.....	.....	49 25	49 25
Indianapolis N'l B'k, Indianapolis, Ind	929 27	.....	.....	929 27	929 27
German Nat'l Bank, Memphis, Tenn	.....	.....	.....	.....	.....
Nassau Nat'l Bank, Brooklyn, N. Y	500 00	.....	.....	500 00	500 00
Peoples' Nat'l Bank, Charleston, S. C	4, 387 82	.....	.....	4, 387 82	4, 387 82
Planters' Nat'l Bank, Richmond, Va	408 59	.....	.....	408 59	408 59
Planters' Nat'l Bank, Danville, Va	201 84	.....	.....	201 84	201 84
San Antonio N'l B'k, San Antonio, Tex	165 30	.....	.....	165 30	165 30
Total	5, 209, 230 37	6, 108, 488 87	4, 099, 733 68	15,417,452 92	11, 317, 719 24

Comparative statement between fiscal years

Deposits for fiscal year of 1876		$5, 463, 166 31
Deposits for fiscal year of 1877		5, 209, 230 37
Decrease in deposits for 1877		253, 935 94
Grants from the treasury for 1877	$6, 108, 488 87	
Grants from the treasury for 1876	5, 089, 776 50	
Increase in grants for 1877	1, 018, 712 37	
Aggregate receipts for 1877		11, 317, 719 24
Aggregate receipts for 1876		10, 552, 942 81
Increase in aggregate receipts for 1877		764, 776 43
Increase of grants from treasury for 1877	1, 018, 712 37	
Deduct decrease of deposits for 1877	253, 935 94	
Balance	764, 776 43	
Decrease of receipts for 1877		432, 878 23
Deduct increase of receipts for 1877		178, 942 29
Decrease for 1877, as shown above		253, 935 94

depositories during the fiscal year ended June 30, 1877.

Increase of receipts over 1876.	Decrease of receipts from 1876.	Warrants drawn.	Increase over 1876.	Decrease from 1876.	Transfer account.		Balance subject to draft June 30, 1877.
					From—	To—	
.....	$271,529 38	$1,902,115 54	$1,178,909 01	.....	$300,000 00	$1,749,733 68	$31,145 60
$15,220 27	.....	217,860 93	.....	$12,106 21	.....	75,000 00	55,709 00
.....	20,127 57	494,822 02	.....	127,210 23	.....	.....	123,103 10
.....	25,491 60	96,284 48	.....	233,006 53	.....	75,000 0	.....
.....	34,206 68	1,124,854 83	.....	334,495 76	.....	925,000 00	100,219 68
.....	37,058 75	314,025 14	28,683 01	.....	.....	75,000 00	33,938 43
22,552 51	.....	448,092 70	14,998 53	.....	.....	350,000 00	28,263 97
.....	32,387 61	4,577,851 80	.....	568,739 37	3,596,468 63	.....	497,635 70
36,651 06	.....	481,676 05	19,943 61	.....	175,000 00	.....	127,501 85
49,751 28	.....	390,836 12	40,561,44	.....	.....	25,000 00	46,711 21
39,836 64	.....	1,074,803 67	.....	9,238 39	.....	825,000 00	29,405 69
.....	1,000 00	.....	.....	.....	500 00	.....	.....
.....	220 90	.....	.....	.....	.....	.....	.....
2,636 91	.....	.....	.....	.....	2,636 91	.....	.....
.....	285 30	.....	.....	.....	.....	.....	.....
.....	3,338 13	.....	.....	.....	3,520 63	.....	20 00
1,219 00	.....	.....	.....	.....	230 55	.....	2,232 19
.....	252 38	.....	.....	.....	252 38	.....	.....
258 04	.....	.....	.....	.....	257 04	.....	1 00
.....	1,016 55	.....	.....	.....	1,169 12	.....	142 00
692 74	.....	.....	.....	.....	1,441 37	.....	1,222 31
.....	560 00	.....	.....	.....	.....	.....	.....
40 00	.....	.....	.....	.....	40 00	.....	.....
.....	32 20	.....	.....	.....	32 20	.....	.....
.....	556 71	.....	.....	.....	699 28	.....	142 57
613 0.	.....	.....	.....	.....	792 7.	.....	.....
.....	92 07	.....	.....	.....	.....	.....	.....
.....	125 00	.....	.....	.....	125 00	.....	.....
.....	193 85	.....	.....	.....	148 85	.....	.....
.....	2,825 47	.....	.....	.....	3,380 24	.....	376 77
65 80	.....	.....	.....	.....	54 80	.....	21 00
.....	777 83	.....	.....	.....	87 10	.....	98 38
1,354 03	.....	.....	.....	.....	610 58	.....	1,208 45
115 00	.....	.....	.....	.....	.....	.....	115 00
9 05	.....	.....	.....	.....	276 24	.....	.....
.....	273 00	.....	.....	.....	273 00	.....	.....
218 41	.....	.....	.....	.....	286 59	.....	5 00
2,064 68	.....	.....	.....	.....	2,164 68	.....	.....
49 25	.....	.....	.....	.....	49 25	.....	.....
.....	48 93	.....	.....	.....	1,851 52	.....	.....
.....	478 30	.....	.....	.....	.....	.....	.....
500 00	.....	.....	.....	.....	500 00	.....	.....
4,387 82	.....	.....	.....	.....	6,109 26	.....	892 42
408 59	.....	.....	.....	.....	408 59	.....	.....
201 84	.....	.....	.....	.....	201 84	.....	.....
96 35	.....	.....	.....	.....	165 30	.....	.....
178,942 29	432,878 23	11,123,223 28	1,283,095 60	1,284,796 49	4,099,733 68	4,099,733 68	1,080,111 32

of 1876 *and* 1877 *at treasury depositories.*

Warrants drawn for 1876	$11,124,924 17	
Warrants drawn for 1877	11,123,223 28	
Decrease of warrants for 1877		$1,284,796 49
Deduct increase of warrants for 1877		1,283,095 60
	1,700 89	1,700 89
Balance subject to draft June 30, 1877		1,080,111 32
Balance subject to draft June 30, 1876		866,175 69
Increase for 1877		213,935 63
Total number of warrants issued during fiscal year of 1876		13,456
Total number of warrants issued during fiscal year of 1877		12,593
Decrease for 1877		863

A. D. HAZEN,
Third Assistant Postmaster-General.

No. 5.—*Receipts and disbursements at depository post-offices, on account of the fiscal year ended June 30, 1877.*

Offices.	State.	Proceeds.	Deposits.	Collections.	Aggregate accumulations.	Amount subject to draft June 30, 1876.	Credit balance June 30, 1876.	Total.	Disbursements.	Amount subject to draft June 30, 1877.
Adrian	Michigan	$5,818 83		$16 93	$5,835 76	$1,307 78		$7,143 54	$5,123 23	$2,020 31
Albany	New York	85,288 68	$31,843 98	1,275 85	118,408 51	6,487 82		124,896 33	117,511 40	7,384 93
Albia	Iowa	1,463 50	503 19	2 28	1,968 97	1,538 09		3,507 06	2,821 82	685 24
Atlanta	Georgia	21,707 17	3,036 83	55 05	24,799 05		$603 51	24,195 54	24,028 55	166 99
Auburn	New York	20,078 16	4,786 25	496 61	25,361 02	6,034 37		31,395 39	25,383 41	6,011 98
Augusta	Maine	28,128 29	1,217 50		27,345 79	6,113 73		33,459 52	30,637 35	2,822 17
Austin	Texas	15,668 65	2,514 16	5,125 27	23,308 08	3,946 52		27,254 60	23,593 31	3,661 29
Bangor	Maine	12,247 14	2,791 42	90 00	15,128 56	783 63		15,912 19	14,591 16	1,321 03
Batavia	New York	4,171 28	92 08		4,263 36	1,575 81		5,839 17	4,360 21	1,478 96
Bay City	Michigan	6,264 58	233 84	34 76	6,533 18	2,129 95		8,663 13	7,587 82	1,075 31
Binghamton	New York	16,250 24	7,190 06	19 71	23,460 01	2,714 88		26,174 89	21,517 02	4,657 87
Burlington	Vermont	11,261 24			11,261 24	1,572 92		12,834 16	10,818 36	2,015 80
Charleston	Illinois	2,357 05	292 50		2,649 55	363 67		3,013 22	2,677 18	336 04
Charleston*	South Carolina	28,352 59	717 74	266 19	29,336 52			29,336 52	28,256 99	1,079 53
Cleveland	Ohio	152,951 37	11,767 52		164,718 89	20,848 55		185,567 44	171,259 21	14,308 23
Columbus	....do	49,364 00	2,761 59	411 64	52,537 23	4,662 87		57,200 10	51,215 82	5,984 28
Concord	New Hampshire	14,844 15	18,155 32		32,999 47	2,579 58		35,579 05	29,539 39	6,039 66
Decorah	Iowa	3,253 20	211 32	6 19	3,470 71	1,438 41		4,909 12	2,990 73	1,918 39
Denver	Colorado	26,084 75	12,565 96	1,614 13	40,264 84	448 50		40,713 34	40,667 31	46 03
Des Moines	Iowa	29,480 24	11,101 69	559 33	41,141 26	13,649 18		54,790 44	50,363 05	4,427 39
Detroit	Michigan	137,897 25	5,442 47	657 23	143,996 95	19,666 85		163,663 80	143,337 40	20,326 40
Dubuque	Iowa	21,532 44	2,265 73		23,798 17	438 78		24,236 95	21,937 91	2,299 04
East Saginaw	Michigan	8,945 64	161 50		9,107 14	1,680 90		10,788 04	9,488 55	1,299 49
Elmira	New York	16,022 28	5,664 95	1,250 78	22,938 01	55 88		22,993 89	20,569 19	2,124 70
Evansville	Indiana	15,331 36	1,090 61		16,421 97	392 08		16,814 05	14,075 55	2,738 50
Fort Dodge	Iowa	3,047 73	1,282 21	59 28	4,389 22	395 64		4,784 86	3,960 15	824 71
Fort Wayne	Indiana	13,785 38	1,222 60	746 16	15,754 14	990 20		16,744 34	13,602 75	3,141 59
Grand Rapids	Michigan	29,094 23	519 16		29,613 39	2,542 25		32,155 64	29,647 97	2,507 67
Harrisburg	Pennsylvania	39,840 57	5,163 95	1,118 84	46,123 36	6,561 21		52,684 57	49,444 19	3,240 38
Hartford	Connecticut	75,791 30	7,175 77	26 48	82,993 55	7,018 52		90,012 07	83,387 16	6,624 91
Houghton	Michigan	884 60	2,173 74		3,058 34	648 49		3,706 83	2,961 05	745 78
Houston	Texas	12,003 98	2,641 38	1,017 02	15,662 38	245 90		15,908 28	14,252 24	1,656 04
Huntsville	Alabama	1,874 79	322 62		2,197 41	289 92		2,487 33	2,152 96	334 37
Indianapolis	Indiana	84,125 41	1,152 86	1,183 61	86,461 88	2,411 27		88,873 15	86,365 78	2,507 37
Iowa City	Iowa	6,246 67	3,918 36	44 79	10,209 82	3,245 65		13,455 47	9,623 96	3,831 51
Jacksonville	Florida	7,910 80	1,168 42	1,825 27	10,904 49	1,448 42		12,352 91	11,951 20	401 71
Jamestown	New York	6,314 01	558 88		6,872 89	1,783 76		8,656 65	6,800 45	1,856 20
Kalamazoo	Michigan	10,312 03	1,341 95	28 09	11,682 07	3,956 40		15,638 47	12,697 95	2,940 52
Keene	New Hampshire	4,759 90	938 50	219 97	5,918 37	1,223 19		7,141 56	5,192 27	1,949 29
Keokuk	Iowa	15,576 61	338 53	216 80	16,131 94	3,265 04		19,396 98	16,906 89	2,490 09
Knoxville	Tennessee	8,349 09	2,732 29	59 85	11,141 23	629 04		11,770 27	10,406 59	1,363 68

La Fayette	Indiana	500 00	129 62	1,050 00	1,679 62	.....	1,047 39	632 23	632 23	.....
Lansing	Michigan	11,380 79	360 36	452 04	12,103 19	2,607 29	.....	14,800 48	12,076 33	2,724 15
Leavenworth	Kansas	11,598 66	13,661 34	957 32	26,217 32	194 64	.....	26,411 96	21,536 88	4,875 08
Lexington	Kentucky	11,835 42	187 32	516 31	12,539 05	1,755 99	.....	14,295 04	11,613 99	2,681 05
Lima	Ohio	4,338 79	3,088 93	28 23	7,455 95	2,075 57	.....	9,531 52	3,625 57	5,905 95
Louisville	Kentucky	124,239 53	2,625 71	92 59	126,957 83	2,736 52	.....	129,694 35	123,751 52	5,942 83
Madison	Wisconsin	15,894 28	2,275 09	47 64	18,217 01	868 00	.....	19,085 01	16,328 67	2,756 34
Malone	New York	2,876 11	20 83	9 95	2,906 89	1,177 06	.....	4,083 95	3,045 79	1,038 16
Marquette	Michigan	2,436 66	426 60	.....	2,863 26	630 50	.....	3,493 76	2,462 61	1,031 15
Marshalltown	Iowa	4,486 55	34 66	965 55	5,486 76	697 91	.....	6,184 67	5,209 58	975 09
Meadville	Pennsylvania	7,531 47	2,444 35	1,651 06	11,626 88	735 83	.....	12,362 71	8,892 56	3,470 15
Memphis	Tennessee	40,276 23	4,450 72	1,443 58	46,170 53	.....	1,219 40	44,951 13	43,318 91	1,632 22
Milwaukee	Wisconsin	110,007 10	7,857 01	10,616 12	128,480 23	8,445 02	.....	136,925 25	[1]29,686 01	7,239 24
Mobile	Alabama	22,330 13	3,004 41	67 00	25,401 54	.....	562 41	24,839 13	23,372 36	1,466 77
Montgomery	do	7,229 04	3,989 79	1,503 28	12,722 11	1,815 04	.....	14,537 15	12,828 95	1,708 20
Montpelier	Vermont	6,086 90	2,436 01	86 75	8,609 66	1,570 46	.....	10,180 12	7,881 34	2,298 78
Mount Pleasant	Iowa	3,293 95	154 97	.....	3,448 92	1,873 01	.....	5,321 93	3,091 23	2,230 70
Nashville	Tennessee	33,862 52	2,570 67	142 52	36,575 71	.....	99 73	36,475 98	31,775 11	4,700 87
Newark	New Jersey	72,793 79	14,413 95	630 19	87,837 93	18,567 29	.....	106,405 22	94,543 12	11,862 10
New Bedford	Massachusetts	20,019 86	1,356 03	.....	21,375 89	2,524 18	.....	23,900 07	21,763 38	2,136 69
New Haven	Connecticut	63,134 44	17,449 13	83 78	80,667 35	5,563 73	.....	86,231 08	80,091 64	6,139 44
Norwich	New York	3,723 08	299 37	.....	4,022 45	812 76	.....	4,835 21	4,695 48	139 73
Ogdensburgh	do	5,706 97	1,756 23	.....	7,463 20	610 95	.....	8,074 15	7,027 62	1,046 53
Olean	do	2,377 12	976 46	.....	3,353 58	1,219 12	.....	4,572 70	2,701 12	1,871 58
Omaha	Nebraska	24,052 01	24,197 12	11,543 10	59,792 23	2,660 86	.....	62,453 09	60,694 79	1,758 30
Peoria	Illinois	30,611 96	2,733 26	.....	33,345 22	3,730 36	.....	37,075 58	34,830 66	2,244 92
Pittsburgh	Pennsylvania	159,139 66	9,529 42	1,587 90	170,256 88	15,868 23	.....	186,125 11	[1]69,228 65	16,896 46
Plattsburgh	New York	3,711 64	2,136 79	.....	5,848 43	785 59	.....	6,634 02	4,275 97	2,358 05
Portland	Maine	57,856 97	8,846 94	14 43	66,718 34	12,257 45	.....	78,975 79	72,030 58	6,945 21
Portsmouth	New Hampshire	6,159 70	8,873 35	.....	15,033 05	1,411 46	.....	16,444 51	11,811 78	4,632 73
Portsmouth	Ohio	4,877 55	4,093 50	.....	8,971 05	1,204 30	.....	10,175 35	8,722 27	1,453 08
Providence	Rhode Island	101,212 01	29,641 54	92 28	130,945 83	23,504 86	.....	154,450 69	[1]15,676 40	38,774 29
Raleigh	North Carolina	11,935 08	2,930 83	667 35	15,533 26	206 52	.....	15,739 78	15,313 46	426 32
Richmond	Virginia	53,858 67	4,398 58	125 01	58,382 26	4,352 92	.....	62,735 18	56,679 10	6 056 08
Rochester	New York	95,859 66	5,247 46	.....	101,107 12	6,521 61	.....	107,628 73	94,577 90	13,050 83
Rutland	Vermont	5,340 65	2,824 84	.....	8,165 49	1,120 49	.....	9,285 98	8,833 89	452 09
Saint Albans	do	3,147 30	271 30	15 98	3,434 58	1,305 17	.....	4,739 75	3,746 75	993 00
Saint Johnsbury	do	4,711 62	2,068 44	645 60	7,425 66	1,732 52	.....	9,158 18	7,627 45	1,530 73
Saint Paul	Minnesota	39,525 35	10,262 54	408 21	50,196 10	3,461 38	.....	53,657 48	52,802 58	854 90
Sandusky	Ohio	7,070 46	1,585 33	46 54	8,702 33	2,547 95	.....	11,250 28	9,215 35	2,034 93
Savannah	Georgia	19,686 71	1,413 31	546 93	21,646 95	.....	840 50	20,806 45	20,751 72	54 73
Scranton	Pennsylvania	11,652 56	1,732 61	211 62	13,596 79	2,706 57	.....	16,303 36	12,121 33	4,182 03
Springfield	Illinois	18,340 53	540 13	15 80	18,896 46	1,740 27	.....	20,636 73	18,334 14	2,302 59
Springfield	Massachusetts	43,759 62	4,850 12	.....	48,609 74	2,912 99	.....	51,522 73	44,629 50	6,893 23
Steubenville	Ohio	5,726 26	258 54	.....	5,984 80	1,776 70	.....	7,761 50	4,758 54	3,002 96
Syracuse	New York	55,433 73	3,727 30	271 66	59,432 69	7,024 83	.....	66,457 52	63,572 26	2,885 26
Taunton	Massachusetts	9,960 46	9,334 00	.....	19,294 46	1,608 32	.....	20,902 78	16,103 39	4,799 39
Terre Haute	Indiana	13,431 58	945 62	351 34	14,728 54	906 55	.....	15,635 09	13,712 42	1,922 67
Toledo	Ohio	72,974 71	1,442 93	97,088 34	171,505 98	6,109 08	.....	177,615 06	173,480 51	4,134 55
Towanda	Pennsylvania	3,233 54	56 68	71 67	3,361 89	528 41	.....	3,890 30	2,873 03	1,017 27

* Made draft office October 1, 1876. † Changed to deposit office August 1, 1876.

No. 5.—*Receipts and disbursements at depository post-offices, &c.*—Continued.

Offices.	State.	Proceeds.	Deposits.	Collections.	Aggregate accumulations.	Amount subject to draft June 30, 1876.	Credit balance June 30, 1876.	Total.	Disbursements.	Amount subject to draft June 30, 1877.
Urbana	Ohio	$5,554 06	$444 39	$556 99	$6,555 44	$1,378 92	.....	$7,934 36	$3,916 58	$4,017 78
Utica	New York	36,860 77	5,238 10	186 15	42,285 02	3,981 47	.....	46,266 49	42,388 49	3,878 00
Watertown	do	11,907 77	180 31	.....	12,088 08	2,033 65	.....	14,121 73	13,326 09	795 64
Wellsborough	Pennsylvania	1,286 38	821 22	9 97	2,117 57	293 24	.....	2,410 81	2,069 86	340 95
Wheeling	West Virginia	18,079 86	1,802 16	.....	19,882 02	1,711 95	.....	21,593 97	17,965 43	3,628 54
Williamsport	Pennsylvania	12,645 80	198 43	47 87	12,892 10	965 35	.....	13,857 45	11,568 12	2,289 33
Winona	Minnesota	6,474 95	2,059 02	.....	8,533 97	1,002 36	.....	9,536 33	7,992 26	1,544 07
Wooster	Ohio	4,242 84	897 73	.....	5,140 57	1,444 38	.....	6,584 95	3,019 78	3,565 17
Worcester	Massachusetts	50,041 44	7,506 25	.....	57,547 69	4,970 58	.....	62,518 27	48,203 36	14,314 91
Zanesville	Ohio	10,476 13	720 66	17 24	11,214 03	2,613 85	.....	13,827 88	9,411 75	4,416 13
Total		2,661,480 56	408,839 74	153,293 90	3,223,614 20	321,947 66	$4,372 94	3,541,188 92	3,161,923 62	379,265 30

A. D. HAZEN,
Third Assistant Postmaster-General.

ORDINARY POSTAGE-STAMPS.

Quarter ending—	NUMBER AND DENOMINATION OF STAMPS.									Value.
	1-cent.	2-cent.	3-cent.	5-cent.	6-cent.	10-cent.	15-cent.	30-cent.	90-cent.	
September 30, 1876	25, 520, 800	16, 489, 500	111, 583, 700	1, 931, 480	1, 419, 400	1, 351, 580	171, 720	64, 620	3, 680	$4, 297, 861 00
December 31, 1876	34, 380, 800	16, 211, 300	112, 827, 900	1, 968, 440	1, 213, 800	1, 397, 560	130, 000	58, 520	19, 000	4, 418, 033 00
March 31, 1877	41, 494, 000	19, 070, 900	116, 530, 000	2, 499, 240	1, 747, 700	1, 912, 260	289, 500	114, 450	7, 320	4, 797, 656 00
June 30, 1877	0, 070, 000	17, 921, 150	115, 192, 300	2, 313, 600	1, 558, 150	1, 793, 040	229, 420	90, 180	3, 660	4, 1 6 , 126 00
Total	141, 465, 600	69, 692, 850	456, 133, 900	8, 712, 760	5, 939, 050	6, 454, 440	820, 640	327, 770	33, 660	18, 181, 676 00

NEWSPAPER AND PERIODICAL STAMPS.

Quarter ending—	NUMBER AND DENOMINATION OF STAMPS.												
	2-cent.	3-cent.	4-cent.	6-cent.	8-cent.	9-cent.	10 cent.	12-cent.	24-cent.	36-cent.	48-cent.	60-cent.	72-cent.
September 30, 1876	73, 655	26, 980	35, 480	31, 345	19, 210	6, 210	42, 145	26, 640	23, 005	11, 385	9, 695	9, 119	4, 510
December 31, 1876	66, 510	23, 600	32, 680	28, 210	16, 095	4, 330	37, 955	22, 495	19, 780	10, 510	9, 435	8, 950	4, 460
March 31, 1877	72, 180	27, 360	33, 095	29, 560	16, 865	5, 530	42, 170	25, 630	23, 160	11, 080	10, 365	11, 446	5, 205
June 30, 1877	71, 570	27, 170	38, 040	32, 265	20, 675	6, 240	46, 410	24, 165	20, 815	12, 470	10, 315	9, 705	5, 250
Total	283, 915	105, 110	139, 295	121, 380	72, 845	22, 310	168, 680	98, 930	86, 760	45, 445	39, 810	39, 220	19, 425

Quarter ending—	NUMBER AND DENOMINATION OF STAMPS—Continued.											Value.
	84-cent.	96-cent.	$1. 92.	$3. 00.	$6. 00.	$9. 00.	$12. 00.	$24. 00.	$36. 00.	$48. 00.	$60. 00.	
September 30, 1876	3, 645	9, 190	7, 005	6, 746	3, 207	1, 544	1, 978	926	409	289	853	$242, 527 20
December 31, 1876	4, 285	9, 740	5, 275	6, 059	2, 926	1, 923	2, 160	986	557	289	949	251, 416 80
March 31, 1877	5, 555	10, 570	7, 575	6, 333	2, 867	1, 384	1, 551	735	668	423	998	258, 137 30
June 30, 1877	4, 195	9, 605	5, 715	6, 215	3, 432	2, 234	2, 260	738	499	191	900	248, 523 80
Total	17, 680	39, 105	25, 570	25, 353	12, 432	7, 085	7, 949	3, 385	2, 133	1, 192	3, 700	1, 000, 605 10

No. 6.—*Postage-stamps, stamped envelopes, newspaper-wrappers, and postal cards issued during fiscal year ending June 30, 1877*—Continued.

ORDINARY STAMPED ENVELOPES AND WRAPPERS.

Quarter ending—	NUMBER AND DENOMINATION OF ENVELOPES.										NEWSPAPER-WRAPPERS.		Value.
	1-cent.	2-cent.	3-cent.	5-cent.	6-cent.	10-cent.	12-cent.	15-cent.	30-cent.	90-cent.	1-cent.	2-cent.	
September 30, 1876	5, 916, 000	606, 250	13, 787, 400	16, 000	32, 400	.....	.....	.....	.....	.....	5, 046, 500	783, 000	$613, 529 16
December 31, 1876	4, 970, 500	745, 750	14, 881, 850	14, 000	42, 250	.....	.....	.....	.....	.....	4, 233, 750	373, 750	624, 106 11
March 31, 1877	5, 739, 250	856, 500	14, 843, 950	19, 250	30, 200	.....	.....	1, 000	.....	.....	5, 425, 250	255, 500	645, 089 28
June 30, 1877	5, 584, 750	719, 000	15, 436, 600	16, 250	20, 250	3, 500	2, 000	.....	600	200	5, 379, 750	493, 750	664, 211 56
Total	22, 210, 500	2, 927, 500	58, 949, 800	65, 500	125, 100	3, 500	2, 000	1, 000	600	200	20, 085, 250	1, 906, 000	2, 546, 936 11

STAMPED ENVELOPES BEARING A REQUEST TO RETURN.

Quarter ending—	NUMBER AND DENOMINATION OF ENVELOPES.						Value.
	1-cent.	2-cent.	3-cent.	5-cent.	6-cent.	15-cent	
September 30, 1876	405, 000	476, 500	14, 686, 000	3, 500	40, 000	.....	$502, 891 70
December 31, 1876	438, 750	519, 000	15, 154, 500	3, 500	41, 000	1, 000	520, 002 20
March 31, 1877	537, 000	537, 250	15, 397, 500	4, 000	26, 000	.....	528, 640 70
June 30, 1877	432, 000	529, 750	15, 088, 750	8, 000	45, 500	.....	518, 461 05
Total	1, 812, 750	2, 062, 500	60, 326, 750	19, 000	152, 500	1, 000	2, 069, 995 65

POSTAL CARDS.

Quarter ending—	Number of cards.	Value.
September 30, 1876	37, 534, 000	$375, 340 00
December 31, 1876	43, 213, 000	432, 130 00
March 31, 1877	44, 616, 000	446, 160 00
June 30, 1877	44, 652, 500	446, 525 00
Total	170, 015, 500	1, 700, 155 00

OFFICIAL POSTAGE-STAMPS.

Quarter ending—	NUMBER AND DENOMINATION OF STAMPS.												Value.
	1-cent.	2-cent.	3-cent.	6-cent.	7-cent.	10-cent.	12-cent.	15-cent.	24-cent.	30-cent.	90-cent.	$2.00.	
September 30, 1876	76, 780	101, 350	1. 938, 400	277, 300	1, 220	8, 820	6, 980	4, 220	3, 980	55, 320	21, 045	.....	$116, 514 50
December 31, 1876	98, 800	135, 300	2, 223, 000	210, 300	2, 000	61, 000	62, 400	4, 200	4, 600	13, 350	16, 200	.....	117, 049 00
March 31, 1877	177, 900	149, 800	3, 152, 600	304, 600	30, 500	57, 700	67, 600	59, 200	11, 100	64, 450	43, 400	500	204, 585 00
June 30, 1877	151, 200	142, 800	3, 372, 200	590, 500	15, 050	49, 850	41, 750	14, 650	11, 030	17, 830	13, 625	745	175, 958 70
Total	504, 680	529, 250	10, 686, 200	1, 382, 700	48, 770	177, 370	178, 730	82, 270	30, 710	150, 950	94, 270	1, 245	614, 107 20

OFFICIAL STAMPED ENVELOPES AND WRAPPERS.

Quarter ending—	NUMBER AND DENOMINATION OF ENVELOPES.								NEWSPAPER-WRAPPERS.		Value.
	1 cent.	2-cent.	3-cent.	6-cent.	10-cent.	12 cent.	15-cent.	30-cent.	1-cent.	2-cent.	
September 30, 1876	200	203, 100	2, 417, 100	66, 400	.....	.....	.....	.....	600, 200	300	$87, 306 08
December 31, 1876	.....	167, 000	2, 674, 850	50, 000	.....	.....	.....	.....	.....	.....	87, 040 50
March 31, 1877	100	235, 500	3, 713, 550	102, 000	20	.....	.....	.....	800, 000	.....	131, 336 44
June 30, 1877	100	143, 000	3, 257, 850	48, 350	100	325	200	200	270, 000	.....	106, 678 39
Total	400	748, 600	12, 063, 350	266, 750	120	325	200	200	1, 670, 200	300	412, 361 41

No. 6.—*Postage-stamps, stamped envelopes, newspaper-wrappers, and postal cards issued during the fiscal year ending June 30, 1877*—Continued.

RECAPITULATION.

Articles.	Whole number.	Value.
Ordinary postage-stamps	689, 580, 670	$18, 181, 676 00
Newspaper and periodical stamps	1, 388, 709	1, 000, 605 10
Ordinary stamped envelopes—plain	84, 285, 700	2, 281, 574 11
Ordinary stamped envelopes—request	64, 374, 500	2, 069, 995 65
Newspaper-wrappers	21, 991, 250	265, 362 00
Postal cards	170, 015, 500	1, 700, 155 00
Official postage-stamps	13, 867, 145	614, 107 20
Official stamped envelopes	14, 750, 445	412, 361 41
Aggregate	1, 060, 253, 919	26, 525, 836 47

A. D. HAZEN,
Third Assistant Postmaster-General.

No. 7.—*Postage-stamps, stamped envelopes, newspaper-wrappers, and postal cards issued during the fiscal year ending June 30, 1877.*

Description.	Quarter ending September 30, 1876.	Quarter ending December 31, 1876.	Quarter ending March 31, 1877.	Quarter ending June 30, 1877.	Total.
Ordinary postage-stamps.					
One-cent	25, 520, 800	34, 380, 800	41, 494, 000	40, 070, 000	141, 465, 600
Two-cent	16, 489, 500	16, 211, 300	19, 070, 900	17, 921, 150	69, 692, 850
Three-cent	111, 583, 700	112, 827, 900	116, 530, 000	115, 192, 300	456, 133, 900
Five-cent	1, 931, 480	1, 968, 440	2, 499, 240	2, 313, 600	8, 712, 760
Six-cent	1, 419, 400	1, 213, 800	1, 747, 700	1, 558, 150	5, 939, 050
Ten-cent	1, 351, 580	1, 397, 560	1, 912, 260	1, 793, 040	6, 454, 440
Fifteen-cent	171, 720	130, 000	289, 500	229, 420	820, 640
Thirty-cent	64, 620	58, 520	114, 450	90, 180	327, 770
Ninety-cent	3, 680	19, 000	7, 320	3, 660	33, 660
Value	$4,297,861 00	$4,418,033 00	$4,797,656 00	$4,668,126 00	$18,181,676 00
Newspaper and periodical stamps.					
Two-cent	73, 655	66, 510	72, 180	71, 570	283, 915
Three-cent	26, 980	23, 600	27, 360	27, 170	105, 110
Four-cent	35, 480	32, 680	33, 095	38, 040	139, 295
Six-cent	31, 345	28, 210	29, 560	32, 265	121, 380
Eight-cent	19, 210	16, 095	16, 865	20, 675	72, 845
Nine-cent	6, 210	4, 330	5, 530	6, 240	22, 310
Ten-cent	42, 145	37, 955	42, 170	46, 410	168, 680
Twelve-cent	26, 640	22, 495	25, 630	24, 165	98, 930
Twenty-four-cent	23, 005	19, 780	23, 160	20, 815	86, 760
Thirty-six-cent	11, 385	10, 510	11, 080	12, 470	45, 445
Forty-eight-cent	9, 695	9, 435	10, 365	10, 315	39, 810
Sixty-cent	9, 119	8, 950	11, 446	9, 705	39, 220
Seventy-two-cent	4, 510	4, 460	5, 205	5, 250	19, 425
Eighty-four-cent	3, 645	4, 285	5, 555	4, 195	17, 680
Ninety-six-cent	9, 190	9, 740	10, 570	9, 605	39, 105
One-dollar-and-ninety-two-cent	7, 005	5, 275	7, 575	5, 715	25, 570
Three-dollar	6, 746	6, 059	6, 333	6, 215	25, 353
Six-dollar	3, 207	2, 926	2, 867	3, 432	12, 432
Nine-dollar	1, 544	1, 923	1, 384	2, 234	7, 085
Twelve-dollar	1, 978	2, 160	1, 551	2, 260	7, 949
Twenty-four-dollar	926	986	735	738	3, 385
Thirty-six-dollar	409	557	668	499	2, 133
Forty-eight-dollar	289	289	423	191	1, 192
Sixty-dollar	853	949	998	900	3, 700
Value	$242, 527 20	$251, 416 80	$258, 137 30	$248, 523 80	$1, 000, 605 10
Stamped envelopes and newspaper-wrappers—plain.					
One-cent	5, 916, 000	4, 970, 500	5, 739, 250	5, 584, 750	22, 210, 500
Two-cent	606, 250	745, 750	856, 500	719, 000	2, 927, 500
Three-cent	13, 787, 400	14, 881, 850	14, 843, 950	15, 436, 600	58, 949, 800
Five-cent	16, 000	14, 000	19, 250	16, 250	65, 500
Six-cent	32, 400	42, 250	30, 200	20, 250	125, 100
Ten-cent	.....	.....	.....	3, 500	3, 500
Twelve-cent	.....	.....	.....	2, 000	2, 000
Fifteen-cent	.....	.....	1, 000	.....	1, 000
Thirty-cent	.....	.....	.....	600	600
Ninety-cent	.....	.....	.....	200	200
One-cent wrappers	5, 046, 500	4, 233, 750	5, 425, 250	5, 379, 750	20, 085, 250
Two-cent wrappers	783, 000	373, 750	255, 500	493, 750	1, 906, 000
Value	$613, 529 16	$624, 106 11	$645, 089 28	$664, 211 56	$2, 546, 936 11
Stamped envelopes bearing a request to return.					
One-cent	405, 000	438, 750	537, 000	432, 000	1, 812, 750
Two-cent	476, 500	519, 000	537, 250	529, 750	2, 062, 500
Three-cent	14, 686, 000	15, 154, 500	15, 397, 500	15, 088, 750	60, 326, 750
Five-cent	3, 500	3, 500	4, 000	8, 000	19, 000
Six-cent	40, 000	41, 000	26, 000	45, 500	152, 500
Fifteen-cent	.....	1, 000	.....	.....	1, 000
Value	$502, 891 70	$520, 002 20	$528, 640 70	$518, 461 05	$2, 069, 995 65

No. 7.—*Postage-stamps, stamped envelopes, &c.*—Continued.

Description.	Quarter ending September 30, 1876.	Quarter ending December 31, 1876.	Quarter ending March 31, 1877.	Quarter ending June 30, 1877.	Total.
Postal cards.					
One-cent	37, 534, 000	43, 213, 000	44, 616, 000	44, 652, 500	170, 015, 500
Value	$375, 340 00	$432, 130 00	$446, 160 00	$446, 525 00	$1, 700, 155 00
Official postage-stamps.					
One-cent	76, 780	98, 800	177, 900	151, 200	504, 680
Two-cent	101, 350	135, 300	149, 800	142, 800	529, 250
Three-cent	1, 938, 400	2, 223, 000	3, 152, 600	3, 372, 200	10, 686, 200
Six-cent	277, 300	210, 300	304, 600	590, 500	1, 382, 700
Seven-cent	1, 220	2, 000	30, 500	15, 050	48, 770
Ten-cent	8, 820	61, 000	57, 700	49, 850	177, 370
Twelve-cent	6, 980	62, 400	67, 600	41, 750	178, 730
Fifteen-cent	4, 220	4, 200	59, 200	14, 650	82, 270
Twenty-four-cent	3, 980	4, 600	11, 100	11, 030	30, 710
Thirty-cent	55, 320	13, 350	64, 450	17, 830	150, 950
Ninety-cent	21, 045	16, 200	43, 400	13, 625	94, 270
Two-dollar	.....	.....	500	745	1, 245
Value	$116, 514 50	$117, 049 00	$204, 585 00	$175, 958 70	$614, 107 20
Official stamped envelopes and wrappers.					
One-cent	200	.....	100	100	400
Two-cent	203, 100	167, 000	235, 500	143, 000	748, 600
Three-cent	2, 417, 100	2, 674, 850	3, 713, 550	3, 257, 850	12, 063, 350
Six-cent	66, 400	50, 000	102, 000	48, 350	266, 750
Ten-cent	.....	.....	20	100	120
Twelve-cent	.....	.....	.....	325	325
Fifteen-cent	.....	.....	.....	200	200
Thirty-cent	.....	.....	.....	200	200
One-cent wrappers	600, 200	.....	800, 000	270, 000	1, 670, 200
Two-cent wrappers	300	.....	.....	.....	300
Value	$87, 306, 08	$87, 040 50	$131, 336 44	$106, 678 39	$412, 361 41

RECAPITULATION.

Description.	Number.	Value.
Ordinary postage-stamps	689, 580, 670	$18, 181, 676 00
Newspaper and periodical stamps	1, 388, 709	1, 000, 605 10
Ordinary stamped envelopes, plain	84, 285, 700	2, 281, 574 11
request	64, 374, 500	2, 069, 995 65
Total stamped envelopes	148, 660, 200	4, 351, 569 76
Newspaper wrappers	21, 991, 250	265, 362 00
Postal cards	170, 015, 500	1, 700, 155 00
Official postage-stamps	13, 867, 145	614, 107 20
Official stamped envelopes and wrappers	14, 750, 445	412, 361 41
Whole number and value of stamps, stamped envelopes, and postal cards.	1, 060, 253, 919	26, 525, 836 47

A. D. HAZEN,
Third Assistant Postmaster-General.

No. 8.—*Statement of the official stamps and stamped envelopes furnished each of the Executive Departments during the fiscal year ending June 30, 1877.*

OFFICIAL POSTAGE-STAMPS.

Name of department.	NUMBER AND DENOMINATIONS.												Value.
	1-cent.	2-cent.	3-cent.	6-cent.	7-cent.	10-cent.	12-cent.	15-cent.	24-cent.	30-cent.	90-cent.	2-dollar.	
Executive	3,000	4,000	9,000	1,500	.....	1,300	.....	.....	.....	.....	.....	.....	$600 00
State	15,000	15,000	68,400	33,300	15,000	30,000	1,000	1,000	1,000	1,000	500	1,245	12,300 00
Treasury	300,000	240,000	1,050,000	550,000	25,000	100,000	100,000	50,000	.....	110,000	67,000	.....	196,850 00
War	83,580	102,850	519,200	281,450	6,770	26,170	31,830	14,510	7,610	21,150	270	.....	52,857 20
Navy	15,000	20,000	95,000	43,000	2,000	8,000	10,000	.....	6,000	4,000	4,000	.....	14,360 00
Post Office	56,600	29,900	8,057,600	191,450	.....	300	12,900	8,760	9,600	9,300	8,900	.....	270,375 00
Interior	16,500	92,500	833,000	263,000	.....	7,600	21,000	8,000	5,500	4,000	12,100	.....	60,675 00
Justice	10,000	10,000	34,000	14,000	.....	4,000	2,000	.....	1,000	1,500	1,500	.....	4,840 00
Agriculture	5,000	15,000	20,000	5,000	.....	.....	.....	.....	.....	.....	.....	.....	1,250 00
Total	504,680	529,250	10,686,200	1,382,700	48,770	177,370	178,730	82,270	30,710	150,950	94,270	1,245	614,107 20

OFFICIAL STAMPED ENVELOPES.

Name of department.	NUMBER AND DENOMINATIONS.								NEWSPAPER-WRAPPERS.		Value.
	1-cent.	2-cent.	3-cent.	6-cent.	10-cent.	12-cent.	15-cent.	30-cent.	1-cent.	2-cent.	
War	400	100	235,300	1,600	120	325	200	200	1,670,200	300	$26,640 91
Post Office	.....	748,500	11,828,050	265,150	.....	.....	.....	.....	.....	.....	385,720 50
Total	400	748,600	12,063,350	266,750	120	325	200	200	1,670,200	300	412,361 41

A. D. HAZEN,
Third Assistant Postmaster-General.

No. 9.—*Statement showing the increase in the issue of postage-stamps, stamped envelopes, newspaper-wrappers, and postal cards, including the issues for official use, for the year ending June 30, 1877, over those of the preceding year.*

Description.	1876.		1877.		Increase.		Per cent. increase.	
	Number.	Amount.	Number.	Amount.	Number.	Amount.	Number.	Amount.
Ordinary postage-stamps	698, 799, 090	$18, 773, 454 00	689, 580, 670	$18, 181, 676 00	*9, 218, 420	*$591, 778 00	*1. 31+	*3. 15+
Newspaper and periodical stamps	1, 290, 347	945, 254 75	1, 388, 709	1, 000, 605 10	98, 362	55, 350 35	7. 62+	5. 85+
Ordinary stamped envelopes, plain	82, 467, 000	2, 280, 318 74	84, 285, 700	2, 281, 574 11	1, 818, 700	1, 255 37	2. 20+	. 05+
Ordinary stamped envelopes, request	64, 554, 500	2, 079, 578 30	64, 374, 500	2, 069, 995 65	*180, 000	*9, 582 65	*. 27+	*. 46+
Newspaper-wrappers	18, 498, 750	273, 723 50	21, 991, 250	265, 362 00	3, 492, 500	*8, 361 50	18. 87+	*3. 05+
Postal cards	150, 815, 000	1, 508, 150 00	170, 015, 500	1, 700, 155 00	19, 200, 500	192, 005 00	12. 73+	12. 73+
Total ordinary issues	1, 016, 424, 687	25, 860, 479 29	1, 031, 636, 329	25, 499, 367 86	15, 211, 642	*361, 111 43	1. 49+	*1. 39+
Add official postage-stamps	17, 682, 665	663, 531 50	13, 867, 145	614, 107 20	*3, 815, 520	*49, 724 30	*21. 57+	*7. 49+
Add official stamped envelopes and wrappers	15, 690, 155	429, 110 93	14, 750, 445	412, 361 41	*939, 710	*16, 749 52	*5. 98+	*3. 90+
Aggregate of all issues	1, 049, 797, 507	26, 953, 421 72	1, 060, 253, 919	26, 525, 836 47	10, 456, 412	*427, 585 25	. 99+	*1. 58+

* Decrease.

A. D. HAZEN,
Third Assistant Postmaster-General.

No. 10.—*Statement showing amount of dead mail matter treated in the Division of Dead Letters during the fiscal year ended June 30, 1871.*

CLASSIFICATION AND AMOUNT OF MAIL TREATED AND MODE OF TREATMENT.

Class.			Number.	Class.	Delivered unopened.	Opened.	On hand.
Ordinary domestic mailed letters:				Ordinary domestic mailed letters	*d*25, 198	2, 653, 491	10, 000
Unopened from last fiscal year		5, 200					
Received during the year		2, 683, 489	*a*2, 688, 689	Unmailable letters:			
				Held for postage	*e*201, 327	*f*102, 588	*g*9, 549
Unmailable letters:				Containing unmailable matter	.....	2, 094	.....
Held for postage—				Misdirected	*h*4, 100	63, 201	.....
From last fiscal year	*b*15, 900			Blank	.....	7, 020	.....
Received during the year	297, 564						
		313, 464					
Containing unmailable matter		2, 094					
Misdirected		67, 301					
Blank		7, 020					
			389, 879				
Foreign letters:							
On hand from last fiscal year		3, 089					
Received during the year		183, 092		Foreign letters	182, 521	.....	3, 660
			*c*186, 181				
Third-class matter, (packages, &c.)			23, 541	Third-class matter	.....	23, 541	.....
Total			3, 288, 290	Total	413, 146	2, 851, 935	23, 209

a Including ordinary mail letters, 2,090,286; drop or local, 411,600; returned from hotels, 57,186; fictitious address, 16,794; returned from foreign countries, (domestic origin,) 108,486; ship and steamboat letters, (*i. e.*, brought by sea outside the mails,) 2,261; and registered, 2,076. *b* Awaiting return of notice. *c* Including ordinary, 182,339; registered, 3,842. *d* Card and request letters. *e* Forwarded to address upon receipt of postage. *f* Postage not being paid within thirty days. *g* Awaiting return of notice. *h* Address corrected and letters forwarded.

Statement A, showing the disposition of opened letters.

LETTERS OPENED AND MANNER IN WHICH DISPOSED OF.

Containing—			Number.	Value.	Containing—	Delivered.		Filed.		Outstanding.		Destroyed.
						Number.	Value.	Number.	Value.	Number.	Value.	Number.
Money:												
Outstanding from last fiscal year	6,166=	$11,895 28										
Received during the year	24,580=	40,062 41	30,746	$51,957 69	Money	20,884	$37,952 62	4,308	$5,127 38	5,554	$8,877 69	.....
Drafts, checks, &c.:												
Outstanding from last fiscal year	716=	98,957 89										
Received during the year	12,225=	1,301,780 49	12,941	1,400,738 38	Drafts, checks, &c.	11,601	1,204,405 76	569	189,261 09	771	7,071 53	.....
Property:												
On hand from last fiscal year	8											
Received during the year	26,348		26,356	.....	Property	14,126	.....	12,230	.....	.....	.....	.....
Receipts, &c			23,025	.....	Receipts, &c	21,094	.....	1,931	.....	.....	.....	.....
Photographs			27,185	.....	Photographs	21,282	.....	5,903	.....	.....	.....	.....
Postage-stamps			38,265	.....	Postage-stamps	34,731	.....	3,534	.....	.....	.....	.....
Nothing of value			2,700,307	.....	Nothing of value	674,793	.....	101	.....	.....	.....	*a*2,025,413
Total			2,858,825	1,452,696 07	Total	798,511	1,242,358 38	28,576	194,388 47	6,325	15,949 22	2,025,413

a Including 99 856 letters returned a second time, the writers not being found.

A. D. HAZEN,
Third Assistant Postmaster-General.

Received.

Held for postage:		
Domestic	274,858	
Foreign short-paid	22,706	
(a) On file in the office at beginning of year	15,900	
		313,464
Misdirected		67,301
Blank		7,020
(b) Containing unmailable matter		2,094
Hotel		57,186
Fictitious		17,157
Total		464,222

A. Letters forwarded upon receipt of reply to circular	199,444	
(f) Letters turned over to opening branch	83,204	
Letters on hand awaiting return of circular	9,549	
		292,197
Value of stamps received with replies to circulars		$6,127 56

Disposed of.

A. Held for postage:			
(a) Awaiting reply to circular at beginning of year	15,900		
(d) Treated with circulars during year—			
Domestic	261,651		
Foreign short-paid	14,646		
		292,197	
Official and Navy forwarded		1,883	
B. Opened		19,384	
			313,464
Misdirected:			
Address corrected and forwarded		1,840	
(c) Turned over to foreign branch		2,260	
B. Opened		63,201	
			67,301
Blank:			
B. Opened			7,020
Containing unmailable matter:			
B. Opened			2,094
Hotel:			
(c) Turned over to foreign branch		4,523	
B. Opened		52,663	
			57,186
Fictitious:			
(c) Turned over to foreign branch		363	
B. Opened		16,794	
			17,157
Total			464,222

B. (e) Letters opened containing valuables	17,626	
Letters opened containing nothing of value	143,530	
		161,156
Letters containing nothing of value returned to writer	86,680	
Letters containing nothing of value destroyed	56,850	
		143,530

(a) See report of last year. (b) Containing coins, jewelry, &c., addressed to postal-union countries. (c) Turned over to the foreign branch to be returned to the countries of origin; they are included in the statement of foreign letters treated. (d) Circular notices were sent to the addresses, asking that the postage due be forwarded to this office. (e) These letters were turned over to the various branches having charge of valuable letters, and are included in their statements. (f) These letters were opened, no reply to circulars being received within thirty days.

A. D. HAZEN,
Third Assistant Postmaster-General.

No. 12.—*Table showing the number of foreign letters received and treated in the Division of Dead Letters during the fiscal year ended June 30, 1877.*

CORRESPONDENCE ORIGINATING IN FOREIGN COUNTRIES.

RECEIVED.			DISPOSITION.			
Class.		Number.	Class.	Returned to country of origin.	Delivered to addressee.	On hand.
Ordinary letters—			Ordinary letters	175, 211	52	3, 603
On hand from last fiscal year.	3, 080					
Received during the year	175, 786					
		178, 866				
Registered letters—			Registered letters	3, 723	62	57
On hand from last fiscal year.	9					
Received during the year	3, 833					
		3, 842				
Printed matter for return		3, 473	Printed matter	3, 473		
Total		186, 181	Total	182, 407	114	3, 660

CORRESPONDENCE ORIGINATING IN THE UNITED STATES AND RETURNED FROM FOREIGN COUNTRIES.

RECEIVED.	
Class.	Number.
Ordinary letters	104, 313
Registered letters	468
Printed matter	3, 705
Total	108, 486

STATEMENT A.—*Showing the amount of undelivered correspondence returned to and received from each of the several foreign countries.*

Countries.	Returned to—				Received from—			
	Ordinary.	Registered.	Printed matter.	Total.	Ordinary.	Registered.	Printed matter.	Total.
Austro-Hungary	3, 549	722	295	4, 566				
Belgium	720	36	72	828				
Bermuda	147			147	186			186
Brazil	229	5		234	263	3		266
British India	100			100				
Canada	50, 678	441		51, 119	50, 084	160		50, 244
Cuba	566			566				
Denmark	1, 679	19	14	1, 712				
Egypt	46	1	1	48				
Ecuador	14			14				
France	5, 416	113	1, 766	7, 295				
Great Britain	59, 438	590	25	60, 053	32, 112	276		32, 388
Germany	26, 202	1, 252	251	27, 705				
Greece	75	4	62	141				
Guatemala	56	1		57				
Hong-Kong	1 8	2		120	99			99
Hawaiian Kingdom	160			160	180			180
Italy	7, 382	174	550	8, 106				
Japan	342	4		346	99	3		102
Luxemburg	205	8	4	217				
Mexico	653			653				

STATEMENT A.—*Showing the amount of undelivered correspondence, &c.*—Continued.

Countries.	Returned to—				Received from—			
	Ordinary.	Registered.	Printed matter.	Total.	Ordinary.	Registered.	Printed matter.	Total.
Norway	3,160	59	28	3,247	.....	.....	.....	.....
Netherlands	1,141	8	118	1,267	.....	.....	.....	.....
Newfoundland	211	2	.....	213	153	.....	.....	153
New South Wales	411	17	.....	428	476	8	.....	484
New Zealand	437	8	.....	445	314	6	.....	320
Portugal	2,079	2	25	2,106	.....	.....	.....	.....
Queensland	114	4	.....	118	96	3	.....	99
Roumania	33	2	1	36	.....	.....	.....	.....
Russia	1,953	91	149	2,193	.....	.....	.....	.....
Spain	455	14	66	535	.....	.....	.....	.....
Servia	2	.....	.....	2	.....	.....	.....	.....
Sweden	5,518	63	35	5,616	.....	.....	.....	.....
Switzerland	1,815	81	11	1,907	.....	.....	.....	.....
Salvador	22	.....	.....	22	.....	.....	.....	.....
Turkey	6	.....	.....	6	.....	.....	.....	.....
Venezuela	51	.....	.....	51	.....	.....	.....	.....
Consuls, &c	28	.....	.....	28	3,393	9	.....	3,402
Postal Union	.....	.....	.....	.....	16,858	.....	3,705	20,563

A. D. HAZEN,
Third Assistant Postmaster-General.

No. 13.—*Table showing the detailed classification and disposition of letters containing valuable inclosures for the fiscal year ended June* 30, 1877.

Classification.	Delivered.	Filed for reclamation.	Outstanding in the hands of postmasters.	Total.
Money	20,311	4,871	1,887	27,069
Called "Minor":				
Checks, drafts, bills of exchange, letters of credit, and certificates of stock	6,580	367	395	7,342
Money-orders, foreign and domestic	3,271	71	284	3,626
Notes and due-bills	1,019	57	38	1,114
Deeds and land-warrants	405	18	24	447
Mortgages and assignments, releases of, &c	42	.....	1	43
Leases, assignments of, &c	1	1	1	3
Passage and railroad tickets	259	54	25	338
Bank-books	15	1	2	18
Pension-certificates and wills	9	.....	1	10
Called "Sub-Minor":				
Receipts, bills of lading, &c	9,322	506	.....	9,828
Legal documents	2,285	31	.....	2,316
Sealed foreign letters inclosed	1,469	26	.....	1,495
Sealed domestic letters inclosed	247	49	.....	296
Pension papers, registered-letter receipts, &c	375	4	.....	379
Locks of hair	2,375	108	.....	2,483
Paid notes, canceled checks, &c	579	11	.....	590
Photographs	23,934	3,251	.....	27,185
Postage-stamps	35,023	3,242	.....	38,265
Miscellaneous, (including 90 military papers)	5,130	347	.....	5,477
Called "Property":				
Jewelry	1,168	790	.....	1,958
Dry-goods and clothing	1,193	1,304	.....	2,497
Books, pictures, and music	4,319	2,725	.....	7,044
Merchandise and samples	2,447	3,372	.....	5,819
Cutlery, dental and other instruments	183	184	.....	367
Manuscripts	280	255	.....	535
Miscellaneous	4,441	3,583	...	8,024
	126,682	25,228	2,658	154,568

A. D. HAZEN,
Third Assistant Postmaster-General.

No. 14.—*Table showing the number, classification, and disposition of dead registered letters in the Division of Dead Letters during the fiscal year ended June 30, 1877.*

Number and class of letters received.			How disposed of.		
Domestic:			Delivered without being opened—		
Official	7		To foreign branch	3,833	
Ordinary	2,033		Executive Departments	7	
Request	36		Card and request	36	
		2,076			3,876
Foreign		3,833	Opened		2,033
Total		5,909	Total		5,909

Contents of letters opened.		Disposition of letters opened.					
			Delivered.	Filed.		Outstanding.	Total.
				At once.	Returned and filed.		
Drafts, notes, money-orders, &c	224	Drafts, notes, money-orders, &c	215	1	8		224
Money	849	Money	791	3	50	5	849
Photographs, receipts, certificates, &c	161	Photographs, receipts, certificates, &c	153		8		161
Property	113	Property, (jewelry, &c.)	81	10	11	11	113
Nothing of value	686	Nothing of value	585	34	67		686
Total	2,033	Total	1,825	48	144	16	2,033

A. D. HAZEN,
Third Assistant Postmaster-General.

No. 15.—*Number of registered letters transmitted through the mails from each State and Territory in the United States during the fiscal year ended June 30, 1877.*

States and Territories.	Quarter ended September 30, 1876.			Quarter ended December 31, 1876.			Quarter ended March 31, 1877.			Quarter ended June 30, 1877.			Total.			Grand total of letters registered for year ended June 30, 1877.	Fees received.
	Domestic.	Foreign.	Free.	Domestic.	Foreign.	Free.	Domestic.	Foreign.	Free.	Domestic.	Foreign.	Free.	Domestic.	Foreign.	Free.		
Alabama	7,975	25	1,133	9,596	66	1,328	13,695	61	1,330	12,170	53	1,227	43,436	205	5,018	48,659	$4,364 10
Arkansas	6,178	24	806	8,533	35	782	12,535	42	931	12,373	27	777	39,619	128	3,296	43,043	3,974 70
California	19,147	3,992	1,351	22,831	4,288	1,385	21,907	3,834	1,356	21,342	3,595	1,234	85,227	15,109	5,326	105,662	10,033 60
Colorado	6,658	136	342	7,196	171	390	7,750	139	364	8,331	147	477	29,935	583	1,563	32,081	3,051 80
Connecticut	9,663	459	33,779	11,341	642	33,749	13,161	529	33,860	12,072	488	33,749	46,237	2,118	135,137	183,492	4,835 50
Delaware	1,364	6	79	1,374	11	73	1,809	17	74	1,688	6	59	6,235	40	285	6,560	627 50
Florida	4,368	25	581	4,948	14	483	7,143	30	503	7,322	45	561	23,781	114	2,128	26,023	2,389 50
Georgia	10,388	43	1,417	14,486	74	1,709	17,453	124	1,724	14,770	78	1,744	57,097	319	6,594	64,010	5,741 60
Illinois	49,006	2,043	6,494	61,807	2,405	6,567	72,830	2,245	7,202	65,363	2,011	6,887	249,006	8,734	27,150	284,890	25,774 00
Indiana	27,732	185	2,697	35,134	213	3,060	46,307	254	3,023	41,800	130	2,914	150,973	782	11,694	163,449	15,175 10
Iowa	30,929	276	4,123	43,067	405	4,590	48,602	491	4,290	44,877	346	4,420	167,475	1,518	17,423	186,416	16,899 30
Kansas	14,577	127	1,831	18,077	184	1,891	23,222	261	1,896	21,965	164	1,970	77,841	736	7,588	86,165	7,857 70
Kentucky	12,472	137	1,189	13,048	136	723	16,918	121	807	18,162	121	2,413	60,600	515	5,132	66,247	6,111 50
Louisiana	10,447	456	912	13,147	621	819	14,506	648	887	16,006	579	956	54,106	2,304	3,574	59,984	5,641 00
Maine	16,180	425	905	17,915	463	1,662	26,171	478	910	19,854	442	1,187	74,120	1,808	4,064	79,992	7,592 80
Maryland	8,565	548	855	9,764	390	790	11,459	395	615	11,253	339	749	41,041	1,672	3,009	45,722	4,271 30
Massachusetts	25,385	2,975	15,809	28,857	3,657	15,922	32,026	3,136	15,950	30,453	3,491	15,896	116,721	13,359	63,577	193,557	12,998 00
Michigan	29,809	1,501	3,618	34,657	1,740	3,619	38,620	1,677	2,499	36,752	1,606	3,787	139,838	6,524	13,523	159,885	14,636 20
Minnesota	16,187	416	1,540	22,364	448	2,047	23,528	427	1,363	21,434	443	1,539	83,513	1,734	6,469	91,716	8,524 70
Mississippi	8,690	67	1,349	10,709	48	1,234	11,970	69	1,450	13,708	48	1,513	48,077	232	5,546	53,855	4,830 90
Missouri	30,101	623	2,289	37,212	659	2,466	47,357	661	2,678	48,230	631	2,973	162,900	2,574	10,406	175,880	16,547 40
Nebraska	9,681	174	879	13,141	191	1,315	14,817	212	1,067	14,182	164	1,001	51,821	741	4,292	56,854	5,256 20
Nevada	4,117	616	261	4,341	774	268	4,502	568	272	4,647	448	268	17,607	2,406	1,069	21,082	2,001 30
New Hampshire	8,040	396	545	9,125	450	638	10,644	391	654	9,519	416	880	37,328	1,683	2,717	41,728	3,901 10
New Jersey	11,963	798	612	12,375	978	555	13,312	923	666	13,480	859	642	51,130	3,558	2,475	57,163	5,468 80
New York	87,417	10,965	39,794	100,161	12,828	39,659	106,080	12,192	48,176	97,565	11,767	46,116	391,223	47,755	173,745	612,723	43,897 80
North Carolina	13,358	27	1,747	15,273	18	1,481	19,453	33	1,540	20,447	33	2,043	68,531	111	6,811	75,453	6,864 20
Ohio	44,129	958	4,893	52,852	1,128	5,607	65,203	1,200	6,049	60,587	944	5,823	222,771	4,230	22,372	249,373	22,700 10
Oregon	3,767	33	355	4,668	46	467	5,499	32	376	5,389	33	377	19,323	144	1,575	21,042	1,946 70
Pennsylvania	56,687	2,816	2,724	65,692	3,109	2,865	74,337	2,559	2,444	74,959	2,238	3,324	271,675	10,722	11,357	293,754	28,239 70
Rhode Island	3,414	430	96	3,718	453	115	4,020	450	182	3,794	415	98	14,946	1,768	491	17,205	1,671 40
South Carolina	6,801	60	784	8,408	91	540	10,046	83	702	9,641	55	734	34,896	289	2,759	37,944	3,518 50
Tennessee	12,435	103	1,253	12,745	100	1,147	18,237	102	1,154	25,196	94	1,629	68,613	399	5,173	74,185	6,901 20
Texas	18,246	406	2,250	23,624	470	2,093	33,604	469	2,229	29,833	508	2,332	105,297	1,853	8,904	116,054	10,715 00
Vermont	9,296	418	794	11,953	346	681	13,479	441	910	11,830	331	732	46,549	1,526	3,117	51,192	4,807 50
Virginia	15,085	63	1,025	17,206	161	1,400	20,242	121	1,309	19,751	93	1,366	72,284	438	5,100	77,822	7,272 20
West Virginia	7,521	24	419	8,391	26	551	10,291	33	637	10,251	27	492	36,454	110	2,099	38,663	3,656 40
Wisconsin	28,061	489	2,440	38,898	725	2,961	41,343	722	3,043	36,334	510	3,177	144,636	2,446	11,621	158,703	14,708 20
Alaska	38	1	2	46	3	1	39	5	3	36	.....	.....	159	9	6	174	16 80

No. 15.—*Number of registered letters transmitted through the mails, &c.*—Continued.

States and Territories.	Quarter ended September 30, 1876.			Quarter ended December 31, 1876.			Quarter ended March 31, 1877.			Quarter ended June 30, 1877.			Total.			Grand total of letters registered for year ended June 30, 1877.	Fees received.
	Domestic.	Foreign.	Free.	Domestic.	Foreign.	Free.	Domestic.	Foreign.	Free.	Domestic.	Foreign.	Free.	Domestic.	Foreign.	Free.		
Arizona	1,568	15	89	1,878	12	91	1,992	17	107	2,069	23	143	7,507	67	430	8,004	$757 40
Dakota	2,115	60	212	2,940	77	263	3,576	89	219	3,854	70	222	12,485	296	916	13,697	1,278 10
District of Columbia	4,704	865	14,297	5,055	978	14,764	6,415	980	18,227	5,175	505	16,832	21,349	3,328	64,120	88,797	2,467 70
Idaho	1,754	12	36	2,607	22	33	2,916	31	125	2,823	18	45	10,100	83	239	10,422	1,018 30
Indian	1,141	2	50	1,232	6	43	1,775	10	54	1,754	5	48	5,902	23	195	6,120	592 50
Montana	2,001	22	192	2,690	28	183	2,699	40	185	3,026	30	172	10,416	120	732	11,268	1,053 60
New Mexico	1,738	8	94	1,692	16	109	1,945	13	83	2,442	12	85	7,817	49	371	8,237	786 60
Utah	3,881	70	202	4,741	99	224	5,340	93	284	4,956	146	370	18,918	408	1,080	20,406	1,932 60
Washington	1,889	55	163	2,233	47	147	2,559	48	129	2,577	46	139	9,258	196	578	10,032	945 40
Wyoming	2,611	20	202	3,149	38	228	3,245	43	249	2,702	41	214	11,707	142	893	12,742	1,184 90
Total	709,269	33,798	159,498	856,897	39,880	163,118	1,003,570	37,529	174,787	958,744	34,701	176,336	3,528,480	145,908	673,739	4,348,127	367,438 80

RECAPITULATION.

Total domestic on which fees were collected	3,528,480
Total foreign on which fees were collected	145,908
Total free	673,739
Grand total	4,348,127
Total fees received	$367,438 80

A. D. HAZEN,
Third Assistant Postmaster-General.

No. 16.—*Statement showing the operations of the registered-letter system at the cities of New York and Chicago during the fiscal year ended June 30, 1877.*

Description.	New York.	Chicago.	Total.
Number of registered letters mailed	180, 768	33, 680	214, 448
Number of packages of postage-stamps registered	153, 689	.....	153, 689
Number of registered letters received for delivery	465, 075	249, 616	714, 691
Number of registered letters received for distribution	238, 281	295, 550	533, 831
Number of stamped-envelope packages distributed	23, 483	22, 836	46, 319
Number of postal-card packages distributed	8, 573	6, 710	15, 283
Number of registered packages and pouches for New York City	275, 736	.....	275, 736
Number of registered packages and pouches in transit	125, 539	.....	125, 539
Number of registered packages and pouches made up and mailed	168, 087	.....	168, 087
Total number of letters, packages, and pouches handled	1, 639, 231	608, 392	2, 247, 623

A. D. HAZEN.
Third Assistant Postmaster-General.

No. 17.—*Showing the number and value of registered packages forwarded during the fiscal year ended June 30, 1877, for the Post Office and Treasury Departments.*

Description.	Number of packages.	Value.
Postage-stamps from New York agency	153, 591	$19, 796, 388 30
Stamped envelopes and newspaper-wrappers from Hartford agency	131, 993	5, 029, 293 17
Postal cards from Springfield agency	58, 058	1, 700, 155 00
Total for the Post Office Department	343, 642	26, 525, 836 47
Mutilated currency from Treasury Department, (Treasurer)	19, 792	369, 988 13
Currency remitted from Treasury Department, (Treasurer)	8, 433	61, 652 51
United States bonds sent from Treasury Department, (Comptroller of Currency)	334	26, 228, 250 00
Incomplete currency from Treasury Department, (Comptroller of Currency)	133	180, 500 00
United States national-bank notes from Treasury Department, (Comptroller of Currency)	394	2, 768 00
Internal-revenue stamps	2, 725	97, 303, 881 90
Total for the Treasury Department	31, 811	124, 147, 040 54
Aggregate	375, 453	150, 672, 877 01

A. D. HAZEN.
Third Assistant Postmaster-General.

Statement of the weight of mails dispatched to Postal Union countries during the year.

	Letters. Grams.	Newspapers, &c. Grams.
To Great Britain and Ireland	45,806,812	215,009,966
Germany	26,443,506	95,157,822
France	6,921,694	28,115,534
Italy	2,343,492	10,176,566
Sweden	2,411,839	4,631,719
Switzerland	1,812,849	8,446,495
Norway	1,898,812	3,913,021
Netherlands	1,181,340	3,349,855
Denmark	1,150,875	2,774,877
Belgium	840,036	2,785,814
Spain	589,975	2,898,695
Total	91,401,230	377,260,364

DIPLOMATIC ACT.

The Swiss Post Department having proposed to all the members of General Postal Union:

1st, by circular of 20th October, 1876, to admit into the General Postal Union, on the same conditions as the French Colonies and British India, that is to say, upon the conditions of the arrangement signed at Berne, the 27th of January, 1876, the British Colonies of Ceylon, the establishments of Détroit, (Straits Settlements,) Labuan, Trinidad, British Guiana, Bermuda Islands, and Jamaica;

2d, by circular of 11 November, 1876, to admit the British Colony of the Island of Mauritius and its dependencies into the General Postal Union, upon the conditions of the aforesaid arrangement of 27 January, 1876;

3d, by circular of 8 January, 1877, to admit also and upon the same conditions into the General Postal Union the British Colony of Hong-Kong;

And no objections to these propositions having been presented within the delay of six weeks prescribed by article 17, paragraph 6, of the treaty of Berne of 9 October, 1874—

The undersigned, duly authorized for that purpose, establish, by the present diplomatic act, the definitive adhesion, from the 1st of April, 1877, of the British Government for its colonies of Ceylon, the Straits Settlements, Labuan, Trinidad, British Guiana, the Bermuda Islands, Jamaica, the Island of Mauritius and its dependencies, and Hong-Kong to the stipulations of the treaty concerning the formation of the General Postal Union concluded at Berne, October 9, 1874, and also to the stipulations of the Detailed Regulations for the execution of the said treaty.

Done at Berne, February 23, 1877.

For the Swiss Federal Council, in the name of the members of the Union:

The Vice-President of the Federal Council,

[L. S.] SCHENK.

For the Government of the United Kingdom of Great Britain and Ireland and for the Government of British India:

The Minister-Resident of Her British Majesty near the Swiss Confederation,

[L. S.] EDWIN CORBETT.

DIPLOMATIC ACT.

The Swiss Post Department having proposed by circular of 20th October, 1876, to all the members of the General Postal Union to admit into the Union the whole of the Spanish Colonies upon the same conditions as the French Colonies and British India, that is to say, upon the conditions of the arrangement signed at Berne the 27th of January, 1876, and no objection to this proposition having been presented within the delay of six weeks prescribed by article 17, paragraph 6, of the treaty of Berne of the 9th October, 1874—

The undersigned, duly authorized for that purpose, establish, by the present diplomatic act, the definitive adhesion, from the 1st of May, 1877, of the Government of His Catholic Majesty for the whole of the Spanish Colonies, to the stipulations of the treaty concerning the formation of a General Postal Union, concluded at Berne, the 9th October, 1874, and also to the stipulations of the Detailed Regulations for the execution of the said treaty.

Done in duplicate at Paris, the twenty-first day of April, one thousand eight hundred and seventy-seven, (21 April, 1877.)

For the Swiss Federal Council, in the name of the members of the Union:

The Envoy Extraordinary and Minister Plenipotentiary of the Swiss Confederation, near the French Republic,

[L. S.] KERN.

For the Government of his Catholic Majesty:

His Ambassador near the French Republic,

[L. S.] MARQUIS DE MOLINS.

DIPLOMATIC ACT.

The Swiss Post Department having proposed, by circular of October 20, 1876, to all the members of the General Postal Union, to admit into the union the whole of the Netherland Colonies, on the same conditions as the French Colonies and British India, that is to say, upon the conditions of the arrangement signed at Berne the 27th of January, 1876, and no objection to this proposition having been presented within the delay of six weeks prescribed by article 17, paragraph 6, of the treaty of Berne of 9 October, 1874—

The undersigned, duly authorized for that purpose, establish, by the present diplomatic act, the definitive adhesion, from the 1st of May, 1877, of the Government of the Netherlands for the whole of the Netherland Colonies, to the stipulations of the treaty concerning the formation of a General Postal Union, concluded at Berne, October 9, 1874, and also to the stipulations of the Detailed Regulations for the execution of the said treaty.

Done at Berne, January 19, 1877.

For the Swiss Federal Council, in the name of the members of the Union:

The President of the Confederation,

[L. S.] DR. J. HEER.

For the Government of the Netherlands:

The Consul-General of the Netherlands near the Swiss Confederation,

[L. S.] J. G. SUTER-VERMEULEN.

DIPLOMATIC ACT.

The Swiss Post Department having proposed, by circular of 8th January, 1877, to all the members of the General Postal Union to admit into the Union the Empire of Japan, upon the same conditions as the French colonies and British India; that is to say, upon the conditions of the arrangement signed at Berne the 27th of January, 1876, and no objection to these propositions having been presented within the delay of six weeks, prescribed by article 17, paragraph 6, of the treaty of Berne of 9 October, 1874,

The undersigned, duly authorized for that purpose, establish, by the present diplomatic act, the definitive adhesion, from the 1st of June, 1877, of the Imperial Government of Japan to the stipulations of the treaty concerning the General Postal Union, concluded at Berne the 9th of October, 1874, and also to the Detailed Regulations for the execution of the said treaty.

Done at Berlin, March 3, 1877.

For the Federal Swiss Council, in the name of the members of the Union:

The Envoy Extraordinary and Minister Plenipotentiary of the Swiss Confederation near the German Empire,

[L. S.] A. ROTH.

For the Imperial Government of Japan:

The Envoy Extraordinary and Minister Plenipotentiary of His Majesty the Emperor of Japan near the German Empire,

[L. S.] S. AOKY.

DIPLOMATIC ACT.

The Swiss Post Department having proposed by circular of 6 January, 1877, to all the members of the General Postal Union, to admit into the union the Empire of Brazil upon the same conditions as the French colonies and British India; that is to say, upon the conditions of the arrangement signed at Berne the 27th of January, 1876, and no objection to this proposition having been presented within the delay of six weeks, prescribed by article 17, paragraph 6, of the treaty of Berne of October 9, 1874,

The undersigned, duly authorized for that purpose, establish, by the present diplomatic act, the definitive adhesion, from the 1st of July, 1877, of the Government of the Empire of Brazil to the stipulations of the treaty concerning the formation of a General Postal Union, concluded at Berne the 9th October, 1874, as well as to the stipulations of the Detailed Regulations for the execution of the said treaty.

Done at Berne, March 17, 1877.

For the Swiss Federal Council, in the name of the members of the Union:

The Vice-President of the Federal Council,

[L. S.] SCHENK.

For the Government of the Empire of Brazil:

The Chargé d'Affaires of Brazil *ad interim* near the Swiss Confederation,

[L. S.] J. B. DE SERRO BELFORT.

DIPLOMATIC ACT.

The Swiss Post Department having proposed by circular of the 8th January, 1877, to all the members of the General Postal Union, to admit

into the Union the whole of the Portuguese Colonies upon the same conditions as the French Colonies and British India, that is to say, upon the conditions of the arrangement signed at Berne the 27th of January, 1876, and no objection to this proposition having been presented within the delay of six weeks prescribed by article 17, paragraph 6, of the Berne treaty of 9 October, 1874;

The undersigned, duly authorized for that purpose, establish, by the present diplomatic act, the definitive adhesion, from the 1st of July, 1877, of the Portuguese Government, for the whole of its Colonies, to the stipulations of the treaty concerning the formation of a General Postal Union, concluded at Berne October 9, 1874, and also to the stipulations of the Detailed Regulations for the execution of the said treaty.

Done at Paris the 5th of April, 1877, (one thousand eight hundred and seventy-seven.)

For the Swiss Federal Council, in the name of the members of the Union:

The Envoy Extraordinary and Minister Plenipotentiary of the Swiss Confederation near the French Republic,

[L. S.] KERN.

For His Majesty the King of Portugal and of the Algarves:

His Envoy Extraordinary and Minister Plenipotentiary near the French Republic,

[L. S.] J. DA SILVA MENDES. [SEAL.]

DIPLOMATIC ACT.

The Swiss Post Department having proposed by circular of 22 May, 1877, to all the members of the General Postal Union to admit Persia into the Union on the same conditions as the French Colonies and British India, that is to say, upon the conditions of the arrangement signed at Berne the 27th of January, 1876, and no objection to this proposition having been presented within the delay of six weeks prescribed by article 17, paragraph 6, of the treaty of Berne, of 9th October, 1874;

The undersigned, duly authorized for that purpose, establish, by the present diplomatic act, the definitive adhesion, from the 1st of September, 1877, of the Persian Government to the stipulations of the treaty concerning the formation of a General Postal Union, concluded at Berne October 9, 1874, and also to the stipulations of the Detailed Regulations for the execution of the said treaty.

Done at Berne, August 18, 1877.

For the Swiss Federal Council, in the name of the members of the Union:

The President of the Confederation,

[L. S.] HEER.

For the Government of His Imperial Majesty the Schah of Persia:

The Director of the International Bureau of the General Postal Union,

[L. S.] EUGÈNE BOREL.

DIPLOMATIC ACT.

The Swiss Post Department having proposed by circular of 23 April, 1877, to all the members of the General Postal Union, to admit into the Union Greenland and the Danish Islands of the West Indies, namely, St. Thomas, Ste. Croix, and St. Jean, on the same conditions as the French Colonies and British India, that is to say, upon the conditions of the arrangement signed at Berne, January 27, 1876, and no objection to this

proposition having been presented within the delay of six weeks prescribed by article 17, paragraph 6, of the treaty of Berne, of October 9, 1874;

The undersigned, duly authorized for that purpose, establish, by the present diplomatic act, the definitive adhesion, from the 1st of September, 1877, of the Government of His Majesty the King of Denmark, for Greenland and the Islands of St. Thomas, Ste. Croix, and St. Jean, to the stipulations of the treaty concerning the formation of a General Postal Union, concluded at Berne, October 9, 1874, and also to the stipulations of the Detailed Regulations for the execution of the said treaty.

Done in duplicate, at Paris, the first of August, one thousand eight hundred and seventy seven, (1st August, 1877.)

For the Swiss Federal Council, in the name of the members of the Union:

The Envoy Extraordinary and Minister Plenipotentiary of the Swiss Confederation near the French Republic,

[L. S.] KERN.

For the Government of His Majesty the King of Denmark:

His Envoy Extraordinary and Minister Plenipotentiary near the Government of the French Republic,

[L. S.] MOLTKE-HVITFELDT.

APPENDIX.—FOREIGN MONEY ORDER CONVENTIONS.

ADDITIONAL ARTICLE OF AGREEMENT BETWEEN THE POST OFFICE DEPARTMENTS OF THE UNITED STATES OF AMERICA AND THE DOMINION OF CANADA.

SOLE ARTICLE.

To facilitate the exchange of money-orders between the United States and the Dominion of Canada, it is agreed that all money-orders mailed at the exchange offices in the United States, and addressed to payees in the Dominion of Canada, shall be transmissible in the mails between the two countries free of postage.

This article shall take effect immediately, and shall have equal duration with the postal arrangement now in force between the United States and the Dominion of Canada.

Done in duplicate and signed at Washington the twenty-sixth day of October, one thousand eight hundred and seventy-seven, and at Ottawa the twenty-second day of October, one thousand eight hundred and seventy-seven.

[L. S.] D. M. KEY,
Postmaster-General of the United States.

[L. S.] L. S. HUNTINGTON,
Postmaster-General of the Dominion of Canada.

I hereby approve the aforegoing additional article, and in testimony thereof I have caused the seal of the United States to be affixed.

[L. S.] R. B. HAYES.

By the President:

WM. M. EVARTS,
Secretary of State.

WASHINGTON, *October* 26, 1877.

ADDITIONAL ARTICLE OF AGREEMENT BETWEEN THE POST-OFFICE DEPARTMENTS OF THE UNITED STATES OF AMERICA AND NEWFOUNDLAND.

SOLE ARTICLE.

To facilitate the exchange of money-orders between the United States and Newfoundland, it is agreed that all money-orders mailed at the exchange offices in the United States and addressed to payees in the colony of Newfoundland shall be transmissible in the mails between the two countries free of postage.

This article shall take effect immediately, and shall have equal duration with the postal convention of 20–30 November, 1872, and with the additional articles of agreement concluded thereto.

Done in duplicate and signed at Washington the sixth day of November, one thousand eight hundred and seventy-seven, and at St. Johns the twenty-third day of October, one thousand eight hundred and seventy-seven.

[SEAL.] D. M. KEY,
Postmaster-General of the United States.

JOHN DELANY,
Postmaster-General of Newfoundland.

I hereby approve the aforegoing additional article, and in testimony thereof I have caused the seal of the United States to be affixed.

[SEAL.] R. B. HAYES.

By the President:
WM. M. EVARTS,
Secretary of State.

WASHINGTON, *November* 6, 1877.

CONVENTION BETWEEN THE POST-OFFICE DEPARTMENT OF THE UNITED STATES OF AMERICA AND THE POST-OFFICE DEPARTMENT OF THE KINGDOM OF ITALY.

The Post-Office Department of the United States of America and the Post-Office Department of the Kingdom of Italy, being desirous of establishing an exchange of money-orders between the two countries, the undersigned, duly authorized for that purpose, have agreed to the following articles:

ARTICLE I.

There shall be a regular exchange of money-orders between the two countries.

The maximum amount of each order is fixed at fifty dollars national currency, when issued in the United States, and, when issued in the Kingom of Italy, at two hundred and fifty lire of gold value.

ARTICLE II.

The Italian Post-Office Department shall have the power to fix the rates of commission on money-orders issued in the Kingdom of Italy; and the United States Post-Office Department shall have the same power in regard to money-orders issued in the United States.

Each Post-Office Department shall communicate to the other its tariff of charges, which shall be established under this convention, and the rates shall, in all cases, be paid in advance by the remitter, and shall not, in any event, be repayable.

It is understood, moreover, that each office is authorized to suspend, temporarily, the exchange of money-orders in case the course of exchange, or any other circumstance, shall give rise to abuses, or cause detriment to its own interests, but such action shall not be taken by either postal administration without sending notice to the other.

ARTICLE III.

Each administration shall keep the commission charged on money-orders issued in its offices, but shall pay to the other administration one per cent. on the total amount of such orders.

ARTICLE IV.

In the payment of money-orders to the public in the United States no account shall be taken of any fraction of a cent.

ARTICLE V.

The service of the postal money-order system between the two countries shall be performed exclusively by the agency of the offices of exchange. On the part of the United States the office of exchange shall be New York, and on the part of the Kingdom of Italy, Turin.

ARTICLE VI.

Any person in the United States, desiring to remit to any part of Italy a sum of money within the limits prescribed by Article I of this convention, may pay it into any post office of the former country, authorized to receive sums, payable in Italy, and to pay orders remitted from that country.

The remitter shall give to the postmaster at such post office the name and exact address of the person to whom the amount is to be paid in the country of destination, and also his own name and address.

Any person in Italy desiring to remit to the United States a sum of money within the limits prescribed by Article I, may pay it into any post office in the country of his residence, giving at the same time his own name and address and the name and exact address of the person to whom the amount is to be paid in the United States.

The receiving post office in either country shall transmit, in accordance with the rules established by its postal administration, due notice of such payment by an internal money-order, or otherwise, to the dispatching exchange office.

ARTICLE VII.

Each exchange office shall send, twice every week, to the corresponding exchange office of the other country, a certified list of sums received, since the last previous transmission of the certified list, to be paid in the other. The list, by means of which the exchange office of New York shall communicate to the exchange office of Turin the amounts deposited in the United States, to be paid in Italy, shall be in

conformity with the model "A," annexed to the present convention. The list, by means of which the exchange office of Turin shall communicate to that of New York the amounts deposited in Italy, to be paid in the United States, shall follow the pattern "B," hereto annexed.

The lists dispatched from each exchange office, as well as the entries therein, shall be numbered consecutively, commencing with No. 1, at the beginning of each year. These lists must always be sent in duplicate, and must be written in copyable ink.

Should it happen that, at the day when the lists are to be dispatched, there are no deposits to be communicated for payment, the lists must, nevertheless, be sent. But in that event the exchange office will write across the list the words: "No money orders."

ARTICLE VIII.

As soon as the lists of the dispatching office shall have reached the receiving office of exchange, the latter shall verify the lists received, and, if errors are found, will correct them with red ink.

The exchange office at Turin will place its mark of acceptance on the back of one of the duplicate lists, received from New York, describe thereon, in detail, the errors made thereon, and then return such duplicate to the exchange office of New York.

The exchange office of New York shall treat in the same way all the lists received from the exchange office of Turin.

The receiving office shall make out internal money orders in favor of the payees for the amounts specified in the lists, and shall forward them, free of postage, to the addressees, or to the offices of destination, in conformity with the regulations, existing in each country, for the payment of money orders.

When the lists shall show irregularities, which the receiving office shall not be able to rectify, that office shall demand an explanation from the dispatching office, which shall give such explanation with as little delay as possible. Pending the receipt of the explanation, the issue of domestic money orders of payment, relating to the entries found to be erroneous in the lists, should be suspended.

ARTICLE IX.

At the close of each quarter an account in duplicate shall be prepared and transmitted by the Post Office Department of Italy to the Post Office Department of the United States. For this quarterly account a form shall be used in exact conformity with the pattern "C," hereto annexed.

If this account shows a balance in favor of the Italian postal administration, that of the United States, in returning a copy of the quarterly account, bearing the acknowledgment of its acceptance of the balance, shall transmit therewith a bill of exchange, drawn on Genoa, for the amount thereof, and payable to the Italian postal administration. The latter shall then send an acknowledgment of receipt to the postal administration of the United States.

If, on the other hand, the quarterly account shows a balance in favo of the United States postal administration, the latter shall return one copy, bearing the acknowledgment of its acceptance. In settlement of this account the Italian postal administration shall transmit to that of the United States a bill of exchange for the amount due, drawn on New

York. The United States postal administration shall then send in return an acknowledgment of receipt.

If pending the settlement of an account one of the two postal administrations shall ascertain that it owes the other a balance exceeding five thousand dollars, or twenty-five thousand lire, the indebted administration shall promptly remit the approximate amount of such balance to the credit of the other.

The expenses attending the remittance of bills of exchange shall invariably be borne by the Post Office Department having to make the payment.

ARTICLE X.

In making payments on account, in pursuance of Article IX of this convention, the Italian Post Office Department will make use of a form corresponding to the model "D," and the postal administration of the United States will make use of one like the model "E." Both of these forms are hereto annexed.

ARTICLE XI.

Orders, which cannot for any cause be paid to the person for whom they are intended, shall become void, according to the regulations established in the country of destination, and the sums received therefor shall remain at the disposal of the postal administration of the country of origin, so that they may be repaid to the persons interested, or otherwise disposed of, according to the rules established by the laws or regulations of each country. The Italian office will, therefore, place in the quarterly account, to the credit of the United States, all money orders which are entered in the lists from the United States, and which become void by reason of non payment in Italy. A detailed statement of such orders shall furthermore be transmitted to the Post Office Department of the United States by the Italian Administration at the close of each month. On the other hand, the United States office shall, at the close of each month, promptly transmit to the Italian exchange office, for entry in the quarterly account, a detailed statement of all similar unpaid orders, which were originally certified in the lists from the latter office, and which, under this Article, have become void.

ARTICLE XII.

Repayment, whether of an original or duplicate order, must not be made to the remitter until an authorization for such repayment shall first have been received by the Administration of issue from the Administration where such order was payable, and the amounts of the repaid orders shall be duly credited to the former Administration in the quarterly account. It is optional with each postal administration to determine the manner in which repayment to the remitter is to be made.

ARTICLE XIII.

Until the two Post Office Departments shall consent to an alteration it is agreed that, in all matters of account, relative to money orders, which shall result from the execution of the present convention, the gold dollar shall be considered equivalent to five lire and eighteen centesimi, gold value.

ARTICLE XIV.

Each exchange office shall certify its orders to the other in amounts designated in the denominations of the money, both of the dispatching and receiving country, at the rate of conversion established upon the basis of gold of Article XIII of this convention. This conversion shall be checked at the receiving office of exchange.

ARTICLE XV.

All payments for money orders, whether to or by the public, if not made in money of gold value, shall be made in paper money to the nearest practicable equivalent.

ARTICLE XVI.

The valuation in gold coin of the United States of deposits in paper money, made in that country for payment in Italy, shall be determined at the exchange office of New York, according to the rate of premium on gold on the day of receipt at that office of notification of such deposits. On the other hand, the value in United States paper currency of money orders, certified in the lists sent from the exchange office of Turin to the exchange office of New York, shall be determined, (also at New York,) in accordance with the premium on gold on the day of the receipt of such lists.

ARTICLE XVII.

The orders, issued by each country on the other, shall be subject, as regards payment, to the regulations which govern the payment of domestic orders in the country of destination.

ARTICLE XVIII.

Both postal administrations mutually agree to receive complaints respecting international postal orders, and to dispose of them in accordance with existing regulations in each country.

ARTICLE XIX.

The Post Office Department in each country shall be authorized to adopt any additional rules, (if not inconsistent with the foregoing,) for the greater security against fraud, or for the better working of the system generally.

All such additional rules, however, must be promptly communicated to the Post Office Department of the other country.

ARTICLE XX.

The present convention shall take effect on the second day of July, one thousand eight hundred and seventy-seven, and shall continue in force until twelve months after the date at which one of the contracting parties shall have notified the other of its intention to terminate it.

Done in duplicate and signed in Washington on the thirty-first day of March, in the year of our Lord one thousand eight hundred and

seventy-seven, and in Florence on the twentieth day of April, in the year of our Lord one thousand eight hundred and seventy seven.

D. M. KEY,
Postmaster-General of the United States.

[SEAL OF THE POST-OFFICE DEPARTMENT OF THE UNITED STATES.]

G. BARBAVARA,
Direttore Generale delle Poste Italiane.

[SEAL OF THE POST-OFFICE DEPARTMENT OF THE KINGDOM OF ITALY.]

I hereby approve the foregoing convention, and in testimony thereof I have caused the seal of the United States to be hereto affixed.

[SEAL OF THE UNITED STATES.] R. B. HAYES.

By the President:
WM. M. EVARTS,
Secretary of State.

WASHINGTON, *May* 8, 1877.

A.

Stamp of New York office.

List No. ——

SIR: I have the honor to transmit, to you, in duplicate, a list, containing a detailed statement of the sums received in the United States, since my last dispatch, (List No. ——) for orders payable in the kingdom of Italy, amounting in the aggregate to $—— ——.

Be pleased to examine, complete and return to me the original copy of this list, with your acknowledgment of its receipt indorsed thereon.

I am, respectfully, your obedient servant,

——— ———,
Postmaster, New York, N. Y.

To the Money-Order Office at Turin, Italy.

No. 22.

M. O. B. 1877. Italian. } List No. ——. Sheet No. ——.

Blanks to be filled by the dispatching office at New York, N. Y.														For use of exchange office at Turin.	
Current number of international order.	Number of original order.	Date of original order.	Post-office issuing original order.	Full name of the remitter of the order.	Full name of the beneficiary.	Residence of the beneficiary.	Amount of the original order in United States currency.		Date of receipt at New York.	Premium on gold on date of receipt.	Value of original order in United States gold.		Amount in Italian money.		Post-office on which the final order is drawn.	Remarks.
1	2	3	4	5	6	7	8		9	10	11		12		13	14
							Dolls.	*Cts.*			*Dolls.*	*Cts.*	*L.*	*Ct.*		

MONEY-ORDER OFFICE,
Turin, ——— —, 18—.

SIR: I have examined this list of money orders from No. —— to No. ——, inclusive, for sums received in the United States for payment in the Kingdom of Italy, amounting in the aggregate to $——, and which is to be paid to the net amount of L———.

The said list was found to be correct, with the following exceptions, viz:

I am, sir, your obedient servant,

——— ———

To the POSTMASTER at New York, N. Y.

B.

Stamp of Turin office.

List No. ——.

MONEY-ORDER OFFICE,
Turin, ——— —, 18—.

SIR: I have the honor to transmit to you, in duplicate, a list, containing a detailed statement of the sums received in the Kingdom of Italy since my last dispatch, (List No. ——,) for orders payable in the United States, amounting in the aggregate to L——— —.

Be pleased to examine, complete, and return to me the original copy of this list, with your acknowledgment of its receipt indorsed thereon.

I am, respectfully, your obedient servant,

——— ———.

To the POSTMASTER of the Money-Order Exchange Office, New York, N. Y.

M. O. B. 1877. } List No. ——.
Italian. } Sheet No. ——.

Date of arrival of the present list at New York, N. Y., ——— —, ——.
Premium on gold at that date ——.

Blanks to be filled by the dispatching exchange office at Turin.											For use of exchange office at New York, N. Y.			
Current number of international order.	Number of original order.	Date of original order.	Post-office issuing original order.	Full name of the remitter of order.	Full name of the beneficiary.	Residence of the beneficiary.	Amount of the original order in Italian money.		Value of original order in United States gold.		Amount of original order in United States currency.		Number of domestic order issued by the office at New York.	Office on which the final order is drawn.	Remarks.
1	2	3	4	5	6	7	8		9		10		11	12	13
						City or town. County. State.	*L.*	*Ct.*	*Dolls.*	*Cts.*	*Dolls.*	*Cts.*			

MONEY-ORDER OFFICE,
New York, N. Y., ——— —, 18—.

SIR: I have examined this list of money-orders, from No. —— to No. ——, inclusive, for sums received in the Kingdom of Italy for payment in the United States, amounting in the aggregate to L———, and which is to be paid to the net amount of $———.
The said list was found to be correct, with the following exceptions, viz:

I am, sir, your obedient servant,

Postmaster, New York, N. Y.

C.

ACCOUNT

Of the exchange of money-orders between the Kingdom of Italy and the United States, during the quarter ending ———, ——.

Orders, issued by the Italian office.								Orders, issued by the United States.							
Number of lists.	Date of lists.	Numbers of the international orders.		Total amounts of lists.		Commission due the United States.		Number of lists.	Date of lists.	Numbers of the international orders.		Total amounts of lists.		Commission due the Kingdom of Italy.	
		From—	To—	Dolls	Cts.	L.	Ct.			From—	To—	L.	Ct.	Dolls.	Cts.

STATEMENT

Not paid, and to be credited to the dispatching office.

Orders, originating in the Kingdom of Italy.					Orders, originating in the United States.				
Number of list.	Date of list.	Number of the international order.	Amount of the international order, (gold.)		Number of list.	Date of list.	Number of the international order.	Amount of the international order, (gold.)	
			Dolls.	*Cts*				*Lire.*	*Ct.*

BALANCE—

To credit of Italian office.					To credit of United States office.				
Amount of orders, issued in the United States					Amount of orders, issued in the Kingdom of Italy				
Amount of commission due Italy					Amount of commission, due the United States				
Amount of international orders, originating in Italy, and remaining unpaid					Amount of international orders, originating in the United States and remaining unpaid				
—— dolls. —— cts., converted into lire and ct ..... (1 doll. = 5 L. and 18 ct.)					—— L. —— ct. converted into dolls. and cts ..... (5 L. 18 ct. = 1 dollar.)				
Total					Total				
United States credit to be deducted					Italian credit to be deducted				
Balance to credit of Italian office					Balance to credit of United States office				
	L.	*Ct.*				*Dolls.*	*Cts.*		
Paid on account by the United States office					Paid on account by the Italian office				
Balance remaining					Balance remaining				

The within account exhibits a total balance of ——, which, after deduction of the payments on account, as therein stated, leaves a balance remaining of —— due the —— ——.

Turin, —— —, 18—.

The above statement of account is accepted, with a balance of —— due the —— ——.

Auditor of the Treasury for the Post-Office Department.

Washington, —— —, 18—.

D.

No. ——.

MONEY-ORDER OFFICE,
——, ——— —, 18—

SIR: The lists of international money-orders which the Turin exchange-office has transmitted to the New York exchange-office from ——— —, 18—, to ——— —, 18—, amount to the sum of ..... ——— dolls. —— cts.

The lists transmitted by the New York office to the Turin office, during the same period, amount to ——— L. — ct., equal to ..... ——— dolls. —— cts.

Difference ..... ——— dolls. —— cts.

On account of which the Italian office has already paid the following sums, viz:

——— —, 18—, ———
——— —, 18—, ———
——— —, 18—, ———
——— —, 18—, ——— ——— dolls. —— cts.

Difference remaining ..... ——— dolls. —— cts.

In accordance with the terms of Article X of the convention of ———, 1877, a bill of exchange on New York, N. Y., for ——— dolls. —— cts., (gold,) is herewith transmitted, the receipt of which you will be pleased to acknowledge in due form.

——— ———

To the POSTMASTER-GENERAL of the United States, Washington.

E.

No. ——.

MONEY-ORDER OFFICE,
Washington, ——— —, 18—.

SIR: The lists of international money-orders which the exchange-office of New York has transmitted to the exchange-office of Turin from ——— —, 18—, to ——— —, 18—, amount to the sum of ..... ——— L. —— ct.

The lists transmitted by the exchange office of Turin to the New York office, during the same period, amount to ——— dolls. —— cts., equal to ..... ——— L. —— ct.

Difference ..... ——— L. —— ct.

On account of which the United States office has already paid the following sums, viz:

——— —, 18—, ———
——— —, 18—, ———
——— —, 18—, ———
——— —, 18—, ——— ——— L. —— ct.

Difference remaining ..... ——— L. —— ct.

In accordance with the terms of Article X of the convention of ———, 1877, a bill of exchange on Genoa for ——— L. —— ct., is herewith transmitted, the receipt of which you will be pleased to acknowledge in due form.

———,
Superintendent Money-Order System.

To the POSTMASTER-GENERAL, &c., &c., &c., Florence, Italy.

SPECIAL COMMISSION ON RAILWAY MAIL TRANSPORTATION.

WASHINGTON, D. C., *November* 14, 1877.

Hon. D. M. KEY,
Postmaster-General:

The commission on railway mail transportation, appointed in the month of August and organized on the 1st of September of last year, under an act of Congress approved July 12, 1876, to examine into the subject of the transportation of the mails by railroad companies, was expected to make its report to Congress at the commencement of its then next session.

With the extensive travel and labor expected of the commission, it was found to be impossible to complete the work assigned them and make a comprehensive report within the short period intervening, and Congress therefore extended it to the next succeeding session.

In pursuance of their duties, and agreeably to the instructions of the Postmaster General, the commission placed itself personally in communication with postal officials, railroad managers, and business men in nearly every section of the country, upon the subject given it in charge, having visited the Eastern, Central, and Western States, including the Pacific slope, last fall and early winter, the Southern States, as well the coast line as the interior, last spring, and the Northwestern during the summer; since when the commission has devoted itself with unceasing energy to the matter committed to its consideration, holding many consultations and visiting distant points for further information when needed, the chairman giving his entire time to the preparation of the report, the other members being in constant communication with him, and always holding themselves in readiness for whatever might be required of them in turn in performance of duty.

The compensation of each commissioner was fixed by the President of the United States at $450 per month and necessary expenses. A clerk was appointed by the President with a salary of $200 per month, which continued until the 1st of March, 1877, when Mr. Bassett, until then the clerk, was made one of the commission in place of Mr. Palmer, resigned.

The act of Congress of July, 1876, appropriated the sum of $10,000 for the expenses of the commission, the duties of which, it was then thought, could be completed in three or four months.

By the act of March, 1877, a further sum of $6,000 was appropriated, the latter, however, only applicable for the services and expenses incurred after July 1, leaving nearly six months between the 1st January and 1st July unprovided for.

The salary of the commissioners from September 1, 1876, to December, 1877, (fifteen months,) is	$20,250 00
Total amount of traveling and other expenditures	6,466 60
Total expenditure	26,716 60
Total amount of appropriations	16,000 00
Leaving a deficiency of	10,716 60

A portion of which is expenses incurred and paid by the commission.

The commission respectfully request that you will ask Congress to make an appropriation to cover this deficiency.

The commission trust that the work in which they have been engaged, and to which they have devoted their best endeavors, will be satisfactory to yourself and to Congress, and will establish a basis upon which the compensation of the railroads can be easily determined in the future. The report of the commission, with the returns from the representative railroads showing the actual cost of service performed by them, will be ready to submit to Congress at an early day.

Before doing so, the commission, however, desire to present the same to you for consideration, with the hope that you will make such suggestions as may seem to you to be desirable.

GARDINER G. HUBBARD,
Chairman.

CLASSIFICATION OF MAIL-MATTER.

OFFICE OF THE ASSISTANT ATTORNEY-GENERAL
FOR THE POST-OFFICE DEPARTMENT,
Washington, D. C., November 17, 1877.

SIR: During the temporary absence of the Assistant Attorney-General for this department, in June last, I was requested by the Acting First Assistant Postmaster-General to advise him as to the proper construction to be placed upon that portion of section 15 of the act of July 12, 1876, which reads as follows, to wit: "Regular publications designed primarily for advertising purposes." To his request I replied, under date of June 7th, in a somewhat lengthy opinion, and since that time to the date of this letter I have had referred to me between three hundred and four hundred publications, submitted to the department by postmasters, and in some instances competing publishers, in order that their *status* under the aforementioned section might be judicially determined.

The construction of this section, and its application, have involved the careful examination of all the various sections of the statutes relative to the classification of mailable matter and the rates of postage thereunder.

In view of my connection with this matter, you have requested me to suggest to you any conclusions I may have reached upon this very important branch of the postal service, and particularly as to the necessity for any change in the present laws relative to the same.

In accordance with such request I have the honor to submit the following views for your consideration:

Permit me to say, by way of introduction, that I am not of those who believe that rates of postage, as a principle, should be adjusted to accord with the actual carrying cost of the various articles of mail matter. Nor am I of that class who hold to the opinion that the postal department was designed to be a common carrier. I believe it was intended to have, and that its interests are best subserved in having, a limited use. Hence, like everything else having a limited use, it should be carefully guarded.

I agree in the main with the views which have been heretofore expressed upon this subject by the late general superintendent of railway mail service, George S. Bings, esq., to be found in his printed pamphlet of 1875. Briefly speaking, I hold that within this limited use the primary object of the establishment of a postal system by government was the "general dissemination of intelligence in the interest of the public good."

In this view of it Congress seem to have ever legislated, as recognizing that the welfare of the people, and to a certain extent the perpetuity of our republican institutions, rest upon the intelligence of the citizen. It has made progressive concessions to "the press," notwithstanding the fact that for years the expenditures of the Post-Office Department in the carriage of the newspaper mail have exceeded the receipts, because, doubtless, it has recognized "the press" as an agency of the greatest importance in the promotion of the public good.

Hence, in all its legislation upon this subject, Congress has classed "the press" as privileged matter in the mails, and has, since the act of 1845, been materially cheapening the rates of postage for its transmission through the same, until it reached the act of June 23, 1874, which generously accorded to the "public prints" of the country the benefit of the pound or bulk rates of postage, and thus brought them within the reach of the great body of the people.

It happened that this act was made the occasion by certain sundry not overscrupulous persons for evading the plain spirit which prompted its passage. Under the vaguely loose definition of a "newspaper" and "periodical" which common parlance and even lexicographers have given to these words, it was found possible for persons engaged in certain trade-pursuits which they wished to advertise to the public in a cheap way, and who were attracted by these low rates of postage, to issue weekly, semi-monthly, and less often, but with a degree of regularity which enabled them to lay claim to the title of "periodical," publications devoted to advertising their interests, wares, or specifics, with just enough of hastily-collected news or light reading-matter to enable them to mail them at the low rates fixed by the act of June, 1874. The result was, the mails were freighted with this kind of publication, to the great detriment of the service and the legitimate publications for which the law was intended. The evil became so crying that Congress, upon the recommendation of the Postmaster-General, enacted the 15th section of the act of July 12, 1876, in the hope and with the intent that the evil might be avoided.

The construction given to the law in my letter of the 7th of June has been conceded to be the correct one. With my views you are already familiar, but for the sake of connection I here insert them:

OFFICE OF THE ASSISTANT ATTORNEY-GENERAL,
FOR THE POST-OFFICE DEPARTMENT,
Washington, D. C., June 7, 1877.

SIR: I have made careful examination of the publications which you have submitted to this office, to wit, The Iron Age and The Metal Worker, published by G. D. Williams, at the city of New York, in connection with section 15 of the act of July 12, 1876, and I am of opinion that they are neither of them such publications as bring them within the provisions of that section. There is no ambiguity in the terms "regular publication designed primarily for advertising purposes," as employed in the aforesaid section, but the question of whether a given publication is within the terms employed, being a question of fact rather than law, is not as easily answered. Under the indomitable spirit of enterprise which has ever characterized the business interest of the country, of late years men engaged in certain trade-pursuits have resorted to the expedient of printing or having printed certain publications devoted mainly to the advertisement of their business or trade. These publications are issued in sheets, some of them having the appearance of newspapers, others of pamphlets; they are issued from regular offices of publication, and at regular and stated intervals, some of them designed for free circulation, some for circulation at moderate rates, while other are furnished only to *bona fide* and regular subscribers at a subscription which may be regarded as fair and commensurate, but all of them having for their main object the public and undisguised advertisement of those who publish them.

There can be no doubt that such publications are publications designed primarily for "advertising purposes," and whether they be issued under any of the conditions above named they are alike subject to the rates fixed by the fifteenth section of the act of July 12, 1876. There are, however, publications which do not so undisguisedly advertise the business of those who publish them. They are apparently devoted to the dissemination of intelligence relating to the pursuit or business of a certain class or classes of the general public, such intelligence consisting of correspondence, editorial articles, it may be trade reports, changes in business, and various other matter, as well as what are technically known as advertisements, and yet in point of fact these publications are primarily designed and are so conducted for the advertisement of the busi-

ness interest of those who publish or own them. The main object of such publications being to attract notice to the pursuit of those who publish or own them, it is entirely immaterial to the inquiry to consider by what manner this object is best accomplished. There may be a presumption in favor of all publications of this character which have a *bona fide* subscription list and which are published at rates other than nominal, but it is a presumption which is often overcome by careful diagnosis. The statute was not intended nor does it discriminate against regular publications, denominated class or special publications, *per se*.

Twenty-five years ago a publication which met all tastes, which was for everybody's use, was all that was demanded by the people, but it cannot be denied that at this day the demand is for a division of labor here as elsewhere. It is impossible for a general periodical or newspaper to embrace within its space all the movements of the day, and hence but meager information upon these different subjects can be supplied, the elaborate and scientific details being left to the class-periodicals.

The intention of Congress in the enactment of the statutes was not directed against such regular publications, whether confined to a single department or conveying information interesting and of the highest importance to certain classes of the community, but against those which, under cover of furnishing just such information, were designed primarily to apprise the public, or such of the public as could be induced to subscribe to their publications, of their business or trade.

As a summary of these views I would advise you that publications which are regularly issued by single individuals or by firms, or by combination of individuals or firms engaged in trade, the main object of which is the prosecution of the business interest of the owners or publishers of the same, whether the same be done openly or without disguise, or whether it be done by conveying information relative to the business of a certain class of the general public, as well as such publications as are confined to general purposes of advertising, are such publications as are designated by the fifteenth section of the act of 1876. The question in all cases is a question of intent.

Very respectfully,

A. H. BISSELL,
Acting for the Assistant Attorney-General for the Post-Office Department.

HON JAMES. N. TYNER,
First Assistant Postmaster-General.

Very little difficulty was experienced in interpreting the *intent of the legislation* provided in section 15 of this act, but when it was attempted to make application of this construction, involving as it did the question of *intent in the publication*, it was found next to impossible to do it within the limited field of investigation afforded the department. Various tests were tried, but were all found to fall short of even average fairness. It was deemed the test of subscribership would be a fair one, but in the case of Ehrich's Fashion Quarterly, of New York City, it was disclosed that it had a large legitimate subscription-list, although no doubt existed that the primary intent of its publication was to enhance the business of its publishers, who were besides engaged in the sale of notions. The fact of business management as bearing upon the question of intent was, in many cases, impossible to determine, because the *onus probandi* was upon the department.

To illustrate the difficulty the department encountered in its attempt to apply the law above quoted, I have but to cite the case of a well-known fashion-journal, which was submitted by the First Assistant Postmaster General. An *ex-parte* examination of its contents, with such evidence as the postmaster at the city where the same was published was able to furnish, satisfied me that the journal was published, as its primary object, for increasing, by means of advertising, the business of its publisher, to wit, the importation, for sale, of patterns. Subsequently, and after a personal interview with the publisher, and upon his assurance that such was not the case, his publication was restored to the bulk rate of postage. I accidentally ascertained, some time after, that the publisher had, in many of the large cities of this country and Europe, pattern-emporiums, where the business of selling patterns was largely engaged in, and that the very publication which, upon his representa-

tions, had been restored to its former privileged rates, contained such *data* in connection with any pattern desired as enabled the person in charge of the emporium to find its location upon the shelves. *In fine*, the publication served as an extensive catalogue of patterns which were for sale in these various emporiums.

I take at random from the numberless cases presented another, illustrating the difficulty in another way. The New York * * * was submitted by the postmaster at that city as a publication about which he had grave doubts as to its right to the privilege of the pound rate of postage. The publishers, both in letters and in a private interview, protested by all the inviolability of the publishers' oath that their publication was a *bona fide* trade journal, and published in the interest of its subscribers. It was difficult for the department to prove otherwise, though at a subsequent time it was ascertained that this publication belonged to a class having no genuine or paid-up subscription-list, thriving only upon its advertisements, which are inserted free, on the condition that the advertisers will pay full price for a number of copies, which are sent to persons whose names are furnished upon a printed list.

Many other cases might be cited, but these are deemed sufficient to show the necessity for further legislation upon this subject. The purpose of the law is, I think, conceded, except by the class of persons affected by it in the manner thus illustrated, to be wise; but I am satisfied from the observation and experience of the past six months, that the object desired in its passage cannot be attained unless Congress shall enlarge the scope of the inquiry. The *onus probandi* in all such cases should be shifted from the department to the publisher, on the ground that those who desire the benefits of the *privileged rates*, should themselves prove to the department their right to them.

I believe that this can be best attained by the adoption of the plan outlined in the able letter of the present superintendent of railway mail service to the late Postmaster-General Jewell, under date of February, 1876, to wit, the registration or license of privileged second-class matter.

Privileged matter in the mails, I apprehend, should be that which it pays best to carry, either because of the revenue derived from its carriage, or because it serves to disseminate intelligence, and hence tends to promote the public good. To the former belong letters and letters only; to the latter the "public prints" of the country. I believe not only that this "privileged matter" should be carried through the mails as cheaply as possible, but also that there should be placed as few restrictions as possible upon its carriage; and I am of opinion that this plan of registration will accomplish this latter better than any that has ever, to my knowledge, been suggested. In order that this feature may be the better comprehended, I desire to suggest in the same connections some thoughts which have occurred to me relative to the subject of the classification of mail-matter. Under the present law mailable matter is divided into three classes: First, letters; second, regular printed matter; third, miscellaneous matter. In the first class is embraced all correspondence wholly or partly in writing, except book manuscript and corrected proof-sheets passing between authors and publishers. Mailable matter of the second class embraces all matter exclusively in print, and regularly issued from a known office of publication, without addition by writing, mark, or sign.

The section of the law which describes mailable matter of the third-class is a sort of an *omnium gatherum* section, in which are enumerated

very many articles of printed matter and merchandise, as though Congress had intended to embrace in this section everything which might be declared mailable, and which was not embraced in the other two classes, and had sought to do so by an exhaustive enumeration. Fearing, however, that it had not so done, it provides in a subsequent section that matter to which no specific rate of postage has been attached, that is to say, matter which has not been classified, shall be charged with postage, not as upon articles of the third class, nor in accordance with its character, but at the rate charged for first-class matter. I think the arrangement is exceedingly illogical. Why, it may be asked, should *book manuscript* be excepted from the first-class rate and charged only the low second-class rate, while upon all other manuscript, including that going to magazines and newspapers, is imposed the payment of the high or first-class rate? Magazines and newspapers, when regularly issued, are among the favored articles of mail-matter, and are transmitted at the lowest or pound rates, while books are looked upon as merchandise and subjected to the highest of all the rates. One would naturally suppose that, if exception were made at all, it would be in case of manuscript relating to privileged matter. I beg to suggest, therefore, if the exception is to be made at all, that the words "authors' manuscript" be substituted for "book manuscript," and that the words following be transposed, so that the sentence shall read "except authors' manuscripts passing between authors and publishers, proof-sheets, and corrected proof-sheets," though I can perceive no reason at all for the exception.

Under the provisions of section 15 of the act of July 12, 1876, two rates were assigned to mail-matter of the third class, a rate for merchandise and a rate for printed matter, while unsealed circulars deposited in letter-carrier offices are chargeable at one cent for each circular. Under the rates fixed in this section it has become a matter of great importance to know the distinction between a circular and some one or more of the terms used in the section of the Statutes describing by enumeration third-class matter. Congress not having defined the term "circular," very many communications have been addressed by postmasters to the department, inclosing specimens of matter deposited for mailing in their office, and requesting a construction and an application of the law in the case submitted, the whole mail in some cases being stopped until a decision of the department shall have been returned, to the great annoyance, not to say injustice, of the sender of the mail-matter in question. I would suggest, as a remedy for these annoyances, an amendment to the section describing third-class matter that shall avoid any enumeration at all, and, by taking out from the third class all miscellaneous or irregular printed matter, and relegating the same to the second class, under the head of "ordinary matter" of that class.

To simplify the classification, therefore, and divide mailable matter naturally, I have the honor to suggest that Congress be asked to amend the statutes relative to the classification of mail-matter, so that to the first class shall belong *written matter*, excepting therefrom the matter I have hereinbefore indicated; to the second class *printed matter*, under the divisions indicated in the next and following sections of this letter; and to the third class, under such restrictions and limitations as may be prescribed, *merchandise*.

As the most important feature of this classification is the registration or license of certain second class matter, you will permit me to discuss it somewhat at length. Bearing in mind the kinds of matter that are

regarded as privileged, and that such matter should be carried as cheaply as possible and with the fewest restrictions possible, printed or second-class matter would be divided then into "regular, or privileged," and "miscellaneous, or ordinary." Within the former class would be embraced all periodicals, and newspapers devoted to public or political matters, religion, morality, social economy, science, literature, the arts, or the industries, and would be entitled to the privilege of registration at the pound or low rate of postage. The "miscellaneous, or ordinary," would include all printed matter now embraced within the third class, including transient magazines and newspapers, and regular publications designed primarily for advertising purposes, or for free circulation, or for circulation through the mails at nominal rates. As has been already stated, the pound rates of postage have heretofore acted as the incentive in prompting the publication by business men of business circulars having the form of newspapers, for which they claimed the right of transportation at the cheap rates. Great confusion has arisen, gross injustice been done, and inconsistent action been taken by postmasters who were called upon to draw the line, and found it difficult to do so, between what were legitimate publications and those which were simply advertising schemes. Of course these opinions have widely differed, publications of a certain class having been admitted to the bulk rates in one city and excluded from them in another. To the end that uniformity may be had, and postmasters relieved of the exercise of these quasi-judicial functions, I beg to suggest that the statutes themselves should draw the line in clear and unmistakable terms. Publications relating to the various industries of the country are rarely now of a general character. The increasing zeal for information upon special subjects, as well as the opportunity which has been offered to enterprising business men under the attractively low rates of postage to own their own newspaper in which to advertise themselves and their business, have caused to spring up within the last few years a large and constantly increasing number of trade or special publications. These publications may be divided into five classes, described as follows:

First. Those publications originated and published for the dissemination of information upon some special subject, or devoted to the interests of some special industry, having a legitimate list of subscribers and being conducted so as to attract more. Notable instances of this class are The Iron Age, The American Grocer, The Shoe and Leather Reporter, and The Publishers' Weekly, of New York; The Trade-List, of Cincinnati; and The Northwestern Lumberman and The Hardware and Implement Trade Review, of Chicago. There can be no question but what publications of this character should be regarded as equally entitled to all the benefits of the "privileged" class as the leading metropolitan dailies of the country.

Second. Those publications owned and controlled by one, or in many cases several, business concerns, and conducted solely for the advancement of the business or trade of those who own them. Their subscription-price is nominal and they are of no public benefit. To this class may be assigned Baldwin's Monthly, the Leader, published by Rogers, Peet & Co., and Vogel Brothers' Monthly, all of New York City; the Commercial Reporter, of Brooklyn; the Trade Price-List, of Nashville, Tenn., and the Mirror of Fashion, of Kansas City.

Third. Those publications which, having no genuine nor paid-up subscribers, insert advertisements free on the condition that the advertiser will pay full price for from two hundred to one thousand papers, which are sent to persons whose names are given to the advertiser upon a printed list. Among publications of this character may be mentioned

the New York Jobbers' Price-Current, and the Commercial Gazette, of New York.

Fourth. Those publications which do desire advertising only. Such do not want subscribers, so as not to be compelled to issue their publications regularly. If the probable receipts are not likely to exceed the expenses, the publication will be deferred for a week or so. The space in their columns allotted to reading-matter is filled with long editorial puffs of houses or individuals, who buy a certain number of copies for distribution, and pay a sum previously agreed upon. The New York Trade-Journal and the New York Trade-Reporter are publications of this class.

Fifth. Pamphlets containing market quotations and the business-cards of various business-houses opposite the page containing the quotations. They have a subscription price which cannot be regarded as nominal, and are sent to *bona fide* subscribers, who are usually retailers living in the smaller cities and towns of the country. As belonging to this class, I may mention the Saint Louis Weekly Dry Goods and Grocery Reporter and Sheldon's Weekly Dry Goods Price List of New York City. Publications having the characteristics or falling within the description of these latter four classes do not come within the requirements of "privileged matter" in the mails. They are not useful as vehicles of accurate thought, nor are they intended for the instruction or entertainment of the people. They are purely personal enterprises, and should pay their way as nearly as possible through the mails.

In this connection, I desire to call your attention to the elastic interpretation which has been given to the term "periodical publication" during the past year, which has resulted in the perpetration of very great injustice toward a conscientious and enterprising class of publishers. Certain publications, issued at stated intervals from a known office of publication, each number containing a novel or a reprint of a novel, in some cases complete in itself, in others incomplete, but having a determinate entirety, to be consummated when a certain number of copies have been published, have been admitted to the mails at the "bulk rate," it having been held that because they contained literary matter and possessed the element of periodicity, they must be regarded as "periodical publications." I cannot understand the logic of a decision which would admit the Sunnyside Library, the first three numbers of which were but reprints in popular form of "Paradise Lost," "Lalla Rookh," and "Don Juan," and at the same time would exclude from the bulk-rates the Tribune series of novels and the Harpers' Half-hour series, which have very properly been charged with the third-class rates, in which charge the publishers thereof have cheerfully acquiesced, although the discrimination against them was very manifest. From inquiries set on foot at one of the large offices of the country, it is believed that not one of the kindred publications to the one first mentioned has a list of subscribers, but is supplied to news-agents and booksellers for sale over their counters. "Don Juan" between covers would be called a book, and, when sent in the mails, charged as merchandise; published in newspaper form and sent to news-agents for sale, is not treated as merchandise, but as a "periodical publication."

I could multiply these cases, but I apprehend that I have sufficiently demonstrated the need of some more intelligent, uniform, and permanent system of procedure. I am fully satisfied, from an examination extending over a period of nearly six months, that the embarrassments and confusion which have arisen at the local offices throughout the country,

incident to the exercise to some extent of quasi-judicial functions by the postmaster in the separation of mail-matter, imposed by the 15th section of the act of July 12th, 1876, and the constantly increasing vexatious and complicated questions arising from the inartistic and unnatural classification, can best be remedied, and uniformity and permanency given to the rulings of the department, by the registration of "privileged printed matter." In this view I am supported by the postmasters of the leading cities of the United States, as well as by those officers of the department who have given the subject any consideration. To this I desire to call your attention particularly. In the division of mailable matter into classes, printed matter of every kind and description should be placed in the second class in the manner and under the divisions I have hereinbefore specified, the rate of privileged matter to be, as now, two and three cents per pound, and for the "ordinary" not to exceed four times that for the privileged second-class matter. Publishers desiring to have their publications transmitted through the mails at the cheap or privileged rate, should submit their publications to the department under such regulations as to time and method as the Postmaster-General may prescribe, who shall cause the same to be examined, and if found to be within the conditions clearly defined in the law of privileged matter, shall cause a certificate of registration to be issued, which shall be filed in the department, and a duplicate thereof forwarded to the postmaster at the office where such publication is published, who shall place the same on file in his office. Such certificate of registration shall admit the publication to the privileged rate of postage and to transmission through the mails at that rate, until revoked by the Postmaster-General, which shall only be upon evidence submitted to him that the publication has so changed its character as to fall without the conditions named in the act, or that the publisher has been guilty of an intentional evasion of the law. In case a news-dealer should seek to transmit within the bulk package of registered matter, matter subject to a higher rate of postage, he, and not the publication, should be denied the privilege of registration. When registered matter has once passed beyond the office at which it is mailed it should be absolutely protected from detention, unless it should be known to be circulating matter prohibited by law, such as obscene or lascivious articles or advertisements, and notices relating to lotteries and fraudulent schemes or devices. If registered matter is suspected by the postmaster at the office of distribution or delivery, the department and the mailing-office being notified of the suspicion and the cause for it, and if deemed of sufficient weight, inquiry and investigation shall be set on foot at the office of mailing. In addition to the revocation of the certificate of registration, there should be imposed a penalty upon the person submitting false evidence as to the character of his publication.

The advantages of the system of registration will, I think, be found to be incomparable. With a cheap registration-fee the certificate would afford protection from interference by some over-zealous postmaster or envious rival to all the legitimate publications of the country. Much of the difficulty which has arisen during the past year has been, in the first place, from a want of proper understanding of the tests which should be applied in determining the character of a publication rendered necessary by the passage of the act of July 12, 1876, and, in the second place, by the limited scope of inquiry afforded the department. This plan relieves postmasters of the discretionary and judicial power possessed under the present law, and enlarges the field of inquiry on the part of the department. It makes a system which is in

itself a guarantee of permanency in the rulings of the department; it relieves the department of the burden of carrying through the mails at grossly unremunerative rates the tons of printed matter originated and conducted solely for individual purposes; and, while imposing no additional burden upon regular publications, it would, I am confident, yield a handsome revenue to the government. From an examination of the various newspaper directories, I think I can safely assume that between seven thousand and eight thousand publications would be fairly entitled to these privileged rates. The number would change, from time to time, but I am confident it would not vary far from seven thousand five hundred annually. At an annual registration fee of one dollar, which no *bona fide* publisher will deem in any way burdensome, a handsome revenue from this source alone will be yielded to the department annually.

This plan of registration would also, in my judgment, serve as a most effectual check upon the habit, so almost universally indulged, under our present system, of transmitting in the bulk or second-class packages matter wholly irrelevant to them, and belonging to a different classification. I cannot state with certainty the amount of revenue of which the department is annually deprived by this commingling of second and third class matter, but from inquiries made among members of the postal service, who have daily experience in the handling of the mails, I have no hesitation in saying it amounts to between one million and two million of dollars.

During the period of my connection with this subject of classification my attention has been called to repeated instances of this character: Publishers and news agents have inclosed in their second-class packages merchandise and other matter of the third class, for which the department should receive higher rates. In this way, bundles of patterns, photographs, fashion-plates, handbills, prospectuses, and circulars have been carried through the mails at the bulk rates of postage. In one case I recall, many hundred circulars, each of which should have paid the government one cent, were thus transported at a nominal cost to the sender, while to the department the actual carrying cost was not only several times greater than the revenue which it did actually receive, but just so much less than it ought to have received.

This plan of registration contemplates a more thorough inspection of the matter passing through the mails, so that not only irregular publications shall be excluded from the advantages of this privileged rate, but that extraneous and irrelevant matter shall be rigidly excluded from privileged second-class matter.

The changes which I have suggested in the classification of mail-matter, and others which will appear in the *projét* of the new law which I append hereto, but which the limits of this letter warn me that I should not discuss, will also relieve the department of many of the perplexing questions which have been submitted to it during the past year, growing out of the unnatural arrangement of mail-matter, the opposing rulings which have been made by the different local officers caused by the enumeration of printed matter of the third class with different rates, and the want of harmony in the decisions of the department even upon mooted questions. The correspondence relative to these matters is now imposed upon a score of clerks connected with the office of the First Assistant Postmaster-General, who have in addition the duties relating to appointments and the routine business of that office to perform. Whenever a matter relating to classification or rates has been submitted to the department it has been referred to the clerk in charge of the ap-

pointment desk of the State from which the matter emanates. Very many times it has happened that the same or kindred questions have come to the department from different sections of the country. Without any concert of action, the answers have been written in accordance with the construction placed upon the statutes by the clerk to whom the matter was referred. Hence it has happened that inconsistent rulings have been made by the department itself, and much vexation and confusion created at the different local offices. That uniformity may be had in the future, I have the honor to suggest that the correspondence relating to all matters of this character should be separated from that relating to appointments and the routine business of the office of the First Assistant Postmaster-General, and referred to a special division charged with the correspondence relating to this matter only; and inasmuch as these questions involve almost altogether the construction of statutes, it would seem very proper that this division should be connected with the office of the Assistant Attorney-General for this department. It might be necessary in so doing to increase the numerical force of the department by one or two persons, but it would not involve additional expense, because a part of the force could be relieved of the correspondence relating to other subjects, and charged with that relating to this, and whatever new appointments might be made could be paid from the fees derived from the registration.

In concluding this letter, it may be well to say that the draught of a bill embodying the plan of registration was prepared and copies thereof sent to a large number of publishers and postmasters throughout the country, with the request that they would freely criticise the same, and make such suggestions relative thereto as might appear proper to them, in order that when the bill should be presented to Congress it might not only embody the views of the department upon this highly important subject, but also any valuable and pertinent suggestions made by those outside of the department who were so largely interested in having it as perfect as possible. It affords me pleasure to say that while some of the details have been disapproved of and adversely criticised, the plan as an entirety has been very fully indorsed.

I submit with this letter such comments, both in print and otherwise, as have been forwarded to the department, as requested in your circular-letter which accompanied the bill as originally draughted; also specimen copies of special or trade publications hereinbefore described, and certain other letters and papers which will very forcibly illustrate the need of new legislation upon the subject of classification and rates.

I have the honor to be, very respectfully,

A. H. BISSELL.

Hon. D. M. KEY,
Postmaster-General.

ANNUAL REPORT

OF THE

AUDITOR OF THE TREASURY

FOR THE

POST-OFFICE DEPARTMENT.

1877.

PORT OF THE AUDITOR FOR THE POST-OFFICE DEPARTMENT.

OFFICE OF THE AUDITOR OF THE TREASURY,
FOR THE POST-OFFICE DEPARTMENT,
October 30, 1877.

IR: I have the honor to submit the following annual report of the ·ipts and expenditures of the Post-Office Department, together with operations of this office in connection therewith, for the fiscal year ed June 30, 1877.

COLLECTION OF POST-OFFICE REVENUES.

he number of post-offices in operation during the year was 37,586, ch are classified, under the regulations adopted for the government he department, chapter 25, sections 352 to 368 inclusive, as follows: cial offices, depositing-offices, depository and draft offices, and col- ion-offices.

he following-named offices are denominated depositories or draft- es, and are required by the Postmaster-General to receive and retain, ject to the drafts of the department, the funds of certain adjacent :es, as well as the revenues of their own, viz:

an, Mich., J. H. Fee.
ny, N. Y., W. H. Craig.
, Iowa, V. Mendell.
ıta, Ga., Benj. Conley.
ırn, N. Y., N. P. Clark.
ısta, Me., H. H. Hamlin.
in, Tex., H. B. Kinney.
;or, Me., A. B Farnham.
via, N. Y., Wm. Tyrrell.
City, Mich., T. C. Phillips.
hamton, N. Y., E. B. Stephens.
ington, Vt., B. J. Derby.
leston, Ill., G. M. Mitchell.
les'on, S. C., B. A. Boseman.
eland, Ohio, N. B. Sherwin.
mbus, Ohio, A. D. Rodgers.
:ord, N. H., J. E. Larkin.
rah, Iowa, A. K. Bailey.
/er, Colo., E. C. Sumner.
Moines, Iowa, J. S. Clarkson.
oit, Mich., J. H. Kaple.
ıque, Iowa, G. L. Torbert.
Saginaw, Mich., T. Saylor.
ra, N. Y., D. F. Pickering.
ısville, Ind., F. M. Thayer.
Dodge, Iowa, N. M. Page.
Wayne, Ind., F. W. Keil.
d Rapids, Mich., P. R. L. Pierce.
isburg, Pa., M. W. McAlarney.
ford, Conn., J. H. Burnham.
ghton, Mich., F. A. Douglass.
Houston, Tex., T. H. Scanlon.
Huntsville, Ala., J. D. Sibley.
Indianapolis, Ind., W. R. Holloway.
Iowa City, Iowa, M. H. Brainard.
Jacksonville, Fla., H. Jay.
Jamestown, N. Y., A. M. Clark.
Kalamazoo, Mich., L. B. Kendall.
Keene, N. H., A. Smith.
Keokuk, Iowa, J. C. Parrott.
Knoxville, Tenn., Wm. Rule.
Lansing, Mich., S. D. Bingham.
Leavenworth, Kans., D. R. Anthony.
Lexington, Ky., H. K. Milward.
Lima, Ohio, W. P. Waldorf.
Louisville, Ky., V. C. Thompson.
Madison, Wis., E. W. Keyes.
Malone, N. Y., J. J. Seaver.
Marquette, Mich., S. M. Billings.
Marshalltown, Iowa, E. N. Chapin.
Meadville, Pa., L. D. Williams.
Memphis, Tenn., R. A. Thompson.
Milwaukee, Wis., H. C. Payne.
Mobile, Ala., M. D. Wickersham.
Montgomery, Ala., J. J. Martin.
Montpelier, Vt., J. W. Clark.
Mount Pleasant, Iowa, G. W. McAdam.
Nashville, Tenn., W. P. Jones.
Newark, N. J., W. Ward.
New Bedford, Mass., T. Coggeshall.
New Haven, Conn., N. D. Sperry.
Norwich, N. Y., J. K. Spaulding.

Ogdensburg, N. Y., R. G. Pettibone.
Olean, N. Y., G. M. Fobes.
Omaha, Nebr., F. F. Hall.
Peoria, Ill., J. S. Stevens.
Pittsburgh, Pa., G. H. Anderson.
Plattsburg, N. Y., H. S. Ransom.
Portland, Me., C. W. Goddard.
Portsmouth, N. H , E. G. Pierce, jr.
Portsmouth, Ohio, L. Adair.
Providence, R. I., C. R. Brayton.
Raleigh, N. C., W. W. Holden.
Richmond, Va., Wm. W. Forbes.
Rochester, N. Y., D. T. Hunt.
Rutland, Vt., A. H. Tuttle.
Saint Albans, Vt., B. D. Hopkins.
Saint Johnsbury, Vt., C. P. Carpenter, (2d.)
Saint Paul, Minn., David Day.
Sandusky, Ohio, J. M. Boalt.
Savannah, Ga., L. McLaws.
Scranton, Pa., J. A. Scranton.
Springfield, Ill., D. L. Phillips.
Springfield, Mass., H. C. Lee.
Steubenville, Ohio, J. M. Reed.
Syracuse, N. Y., A. C. Chase.
Taunton, Mass., E. E. Fuller.
Terre Haute, Ind., N. Fillbeck.
Toledo, Ohio, A. Reed.
Towanda, Pa., S. W. Alvord.
Urbana, Ohio, D. C. Hitt.
Utica, N. Y., C. H. Hopkins.
Watertown, N. Y., W. G. Williams.
Wellsborough, Pa., G. W. Merrick.
Wheeling, W. Va., C. J. Rawling.
Williamsport, Pa., R. Hawley.
Winona, Minn., D. Sinclair.
Wooster, Ohio, A. S. McClure.
Worcester, Mass., J. Pickett.
Zanesville, Ohio, J. C. Douglass.

The following officers receive and retain, subject to the warrants of the Post-Office Department, the funds of such post-offices as are instructed to deposit in their hands, viz:

The Treasurer of the United States, at Washington, D. C.
The assistant treasurers of the United States at—

New York, N. Y.
Baltimore, Md.
New Orleans, La.
Cincinnati, Ohio.
Saint Louis, Mo.
Philadelphia, Pa.
Boston, Mass.
Chicago, Ill.
San Francisco, Cal.

One hundred post-offices are draft-offices, and during the year paid 17,561 drafts, issued by the Postmaster-General, countersigned, entered, and sent out by the Auditor, for sums in the aggregate of	$1,840,072 41
Three thousand and fifty-three are deposit-offices, a portion of which during the year deposited with the Treasurer and assistant treasurers of the United States the sum of	4,575,216 97
Thirty-three thousand two hundred and sixty-three offices are collection-offices, and paid on collection-orders issued to mail-contractors the sum of	4,726,403 93
Two thousand two hundred and ten offices are special offices, and derive their mail supplies by the payment of the revenue of their offices therefor, amounting to	59,347 60
Four thousand and sixty-seven post-offices are supplied by mail-messengers, for which service there was paid during the year	667,107 30

Revenue account of the Post-Office Department.

The receipts of the department for the fiscal year ended June 30, 1877, were		$27,531,585 26
The amounts placed in the Treasury for the service of the department for the fiscal year, being grants in aid of the revenue under the following acts of Congress, were:		
Under the third section of the act approved July 12, 1876, for mail-steamship service between San Francisco, Japan, and China	$250,000 00	
Under the act approved April 6, 1876, to supply a deficiency in the appropriation for postal cards for the fiscal year ended June 30, 1876	62,300 00	
Under the act approved March 3, 1877, (vol. 19, chap. 105, page 355, Statutes,) to pay John T. Morris for capture of mail-robber J. C. Reed	1,000 00	
Under the third section of the act approved June 23, 1874, for supplying deficiency in the revenues of the Post-Office Department for the fiscal year ended June 30, 1875	450,000 00	

Under the third section of the act approved March 3, 1875, for supplying deficiency in the revenues of the Post-Office Department for the fiscal year ended June 30, 1876	$1,000,000 00	
Under the second section of the act approved July 12, 1876, for supplying deficiency in the revenues of the Post-Office Department for the fiscal year ended June 30, 1877	5,250,000 00	
		$7,013,300 00
Aggregate of revenue and grants		34,544,885 26
The expenditures of the department for the fiscal year ended June 30, 1877, were		33,486,322 44
Excess of receipts		1,058,562 82
The balance standing to the credit of the revenue account at the close of the fiscal year ended June 30, 1876, as per last report, was	$1,957,488 62	
Add excess of receipts during fiscal year 1877	1,058,562 82	
Total	3,016,051 44	
Add amount of credit balance accounts closed by suspense for fiscal year 1877	15,748 93	
Total	3,031,800 37	
Deduct amount of debit balance accounts closed by "bad debt" and "compromise" accounts for fiscal year 1877	188,367 77	
Leaving to the credit of the revenue account at close of fiscal year		2,843,432 60
Due by late postmasters, in suit	101,776 40	
Due by late postmasters, not in suit	393,565 52	
		495,341 92
The amount available and subject to draft at close of the fiscal year		2,348,090 68

An appropriation of $850,000 for official postage-stamps for the use of the Post-Office Department, was made for the fiscal year out of the revenues of the department. The amount of such stamps used was $656,095.50, but the item has not been included in this report, as there has been no expenditure except for the manufacture of the stamps, which is included in the expenditure for postage-stamps. Had such appropriation been made from the general Treasury, the revenue account would have been credited as heretofore, under the item of postage-stamps, stamped envelopes, &c., sold, with the exact amount drawn from the Treasury, the revenue being actually increased by such amount.

The net revenue of the department from postages, being the aggregate of balances due the United States by postmasters on the adjustment of their quarterly accounts for the year, after deducting their compensation and the expenses of their offices, was—

For the quarter ended September 30, 1876	$3,766,864 56
For the quarter ended December 31, 1876	3,944,285 16
For the quarter ended March 31, 1877	4,261,496 87
For the quarter ended June 30, 1877	3,909,288 54
Total	15,881,935 13

The amount of letter-postages paid in money was—

For the quarter ended September 30, 1876	$46,358 36
For the quarter ended December 31, 1876	45,640 46
For the quarter ended March 31, 1877	55,101 68
For the quarter ended June 30, 1877	94,257 76
Total	241,358 26

The amount of stamps, stamped envelopes, newspaper and periodical stamps, postal cards, and newspaper-wrappers sold was—

For the quarter ended September 30, 1876	$6,087,568 30
For the quarter ended December 31, 1876	6,382,534 65
For the quarter ended March 31, 1877	6,828,111 41
For the quarter ended June 30, 1877	6,459,281 40
Total	25,757,515 76

The amount of official stamps furnished the different departments, and included in the above amount of stamps sold, was—

To the Executive Office	$600 00
To the State Department	11,008 89
To the Navy Department	14,360 00
To the War Department	79,498 11
To the Interior Department	61,575 92
To the Treasury Department	197,597 55
To the Department of Agriculture	1,250 00
To the Department of Justice	4,840 00
Total	370,730 47
To the Post-Office Department, not included in above table of stamps sold	656,095 50
Total official stamps issued	1,026,825 97

The number of quarterly returns of postmasters received and audited, on which the sum of $15,881,935.13 was found due the United States, was—

For the quarter ended September 30, 1876	35,921
For the quarter ended December 31, 1876	36,584
For the quarter ended March 31, 1877	36,883
For the quarter ended June 30, 1877	37,076
Total	146,464

MAIL-TRANSPORTATION.

The amount charged to transportation accrued and placed to the credit of mail-contractors and others for mail-transportation during the year, was—

For the regular service of mail-routes	$15,153,256 44
For the supply of special and mail-messenger offices	727,462 59
For the salaries of postal-railway clerks, route and other agents	2,436,547 58
For the salaries and per diem of the assistant superintendents of the postal-railway service	38,756 55
Total	18,356,023 16

FOREIGN-MAIL TRANSPORTATION.

San Francisco, Japan, and China	$251,969 04
San Francisco, New South Wales, Queensland, and New Zealand	6,674 78
New York, Great Britain, and Ireland	100,111 38
New York, England, France, and Germany	35,621 09
New York, England, and Bremen	24,809 95
New York and Glasgow	1,820 07
New York and Bermuda	1,119 94
New York, Havana, and Vera Cruz	11,687 50
New York and West Indies	7,923 37
New York, Halifax, and Newfoundland	50 82
New York and San Francisco, and South America, via Panama	11,692 42
New York and South America, via Aspinwall	965 73

New York, West Indies, Brazil, and Argentine Republic	$4,529 63	
Boston, Great Britain, and Ireland	2,461 17	
Boston and Nova Scotia	129 48	
Philadelphia and Queenstown	1,592 16	
New Orleans, Key West, and Havana	858 40	
Portland and Nova Scotia	101 43	
Baltimore and Bremen	28 60	
Cleveland and Canada	120 40	
Chicago, Detroit, Portland, and Great Britain	3,357 57	
Expenses of government mail-agent at Panama	1,452 55	
Expenses of government mail-agent at Aspinwall	940 00	
Expenses of government mail-agent at Havana	800 00	
		$470,817 48
		18,826,840 64
The amount credited to transportation accrued and charged to contractors for overcredits was:		
For fines imposed	$1,800 02	
For deductions	89,295 33	
		91,095 35
Net amount to the credit of mail-contractors and others		18,735,745 29
The amount paid during the year was		19,244,913 65

STATEMENT OF COLLECTING DIVISION.

To this division is intrusted the charge and final settlement of 17,790 accounts of postmasters who became late during the period from July 1, 1875, to June 30, 1877.

Balance due the United States on account of postmasters becoming late prior to July 1, 1876		$546,298 05
Disposed of during the fiscal year:		
Collected by draft	$52,805 64	
Collected by suit	5,345 84	
Credited on vouchers	55,675 87	
Charged to suspense	46 52	
Charged to bad debts	187,663 18	
Charged to compromise debts	743 09	
Amount in process of collection and in suit	244,017 91	
		546,298 05
Amount reported due late postmasters prior to July 1, 1876, as per last report	52,756 24	
Increased during the fiscal year	29,272 73	
		82,028 97
Amount paid thereon	20,970 77	
Closed by suspense	15,596 69	
Amount remaining due	45,461 51	
		82,028 97
Amount due postmasters late during the fiscal year		29,272 73
Amount paid thereon	$3,351 12	
Amount closed by suspense	266 76	
Amount remaining due	25,654 85	
		29,272 73
Number of changes of postmasters reported by appointment office during the fiscal year was 8,473, and the balance due the United States upon the accounts of said late postmasters amounts to		232,655 62
Of which there has been—		
Collected by draft	$86,146 75	
Crediedd on vouchers	0	
Charged to suspense	196 38	
Charged to bad debts	0	
		86,343 13
Total balance remaining due		176,312 49

Remaining due and in process of collection	$174,197 78	
In suit	2,114 71	
		$176,312 49
Amount due by late postmasters for which suit has been brought during the fiscal year		111,390 17
Amount collected by suit during the fiscal year		56,983 89

NOTE.—The very large increase of bad debts over those of former years is accounted for by the fact that during the year a large number of accounts in suit were returned to this office by the Solicitor of the Treasury as "uncollectible."

The subjoined tables, numbered from 1 to 26, inclusive, exhibit in detail the transactions of the department for the fiscal year.

I have the honor to be, very respectfully,

J. M. McGREW,
Auditor.

Hon. DAVID M. KEY,
Postmaster-General.

No. 1.—*Statement exhibiting quarterly the receipts of the Post-Office Department, under their several heads, for the fiscal year ended June* 30, 1877.

Receipts.	Quarter ended September 30, 1876.	Quarter ended December 31, 1876.	Quarter ended March 31, 1877.	Quarter ended June 30, 1877.	Aggregate.
Letter-postage	$46,358 36	$45,640 46	$55,101 68	$94,257 76	$241,358 26
Box-rent and branch offices	331,972 37	329,838 56	330,056 13	330,101 02	1,321,968 08
Fines and penalties	4,319 08	1,260 06	1,872 48	90 00	7,541 62
Postage-stamps, stamped envelopes, newspaper-wrappers, and postal cards	6,087,588 30	6,382,534 65	6,828,111 41	6,459,281 40	25,757,515 76
Dead letters	1,398 50	1,397 00	771 00	1,379 00	4,945 50
Revenue from money-order business, (domestic)	.....	.....	.....	109,148 01	109,148 01
Revenue from money-order business, (previous years, foreign)	63,261 84	.....	.....	.....	63,261 84
Miscellaneous	4,272 93	9,338 95	5,380 79	6,853 52	25,846 19
Total	6,539,171 38	6,770,009 68	7,221,293 49	7,001,110 71	27,531,585 26

J. M. McGREW, *Auditor.*

OFFICE OF THE AUDITOR OF THE TREASURY
FOR THE POST-OFFICE DEPARTMENT, *October* 30, 1877.

Expenditures.	Quarter ended September 30, 1876.	Quarter ended December 31, 1876.	Quarter ended March 31, 1877.	Quarter ended June 30, 1877.	Aggregate.	Paid for previous years but included in aggregate.
Compensation of postmasters	$1,780,851 28	$1,757,176 66	$1,891,771 44	$1,865,451 55	$7,295,250 93	$10,967 57
Compensation of clerks for post-offices	800,661 80	805,594 19	809,873 04	818,868 04	3,234,927 07	1,775 47
Compensation of letter-carriers, and incidental expenses	474,645 61	471,715 49	418,569 88	528,664 60	1,893,595 58	.....
Wrapping-paper	6,000 00	4,912 50	3,335 00	2,960 00	17,207 50	.....
Twine	16,919 00	11,390 17	8,740 00	1,722 00	38,771 17	.....
Postmarking and canceling stamps	4,662 25	1,851 46	3,202 42	278 85	9,994 98	.....
Letter-balances	2,200 00	573 50	.....	.....	2,773 50	.....
Rent, light, and fuel	86,824 08	93,428 25	92,880 64	100,840 19	373,973 16	278 02
Stationery	8,150 85	9,039 34	15,169 17	11,092 60	43,451 96	24 50
Furniture for post-offices	806 06	1,813 24	1,048 32	3,445 57	7,113 19	46 10
Miscellaneous, office of First Assistant Postmaster-General	14,289 68	15,529 53	15,964 78	18,662 55	64,446 54	179 90
Inland mail transportation, star routes	1,450,136 19	1,441,594 98	1,447,912 01	1,564,831 26	5,904,474 44	64,827 10
Inland mail transportation, railroad routes	2,132,167 61	3,134,096 32	2,214,630 00	2,284,100 95	9,764,994 88	1,063,961 77
Compensation of railway-post-office clerks	309,384 73	302,390 22	307,344 02	304,450 44	1,223,569 41	.....
Compensation of route-agents	235,615 84	239,496 25	237,904 37	246,644 40	959,660 86	.....
Compensation of mail-route messengers	36,251 77	35,530 95	36,041 74	39,774 15	147,598 61	.....
Compensation of local agents	25,636 90	26,079 51	26,449 14	27,553 15	105,718 70	.....
Compensation of mail-messengers	163,660 28	167,950 21	164,705 13	171,902 38	668,218 00	9,027 35
Mail locks and keys	1,912 50	.....	1,875 00	11,600 00	15,387 50	.....
Mail bags and catchers	42,326 53	66,772 16	33,604 60	23,327 47	166,030 76	.....
Post-route maps	11,446 74	3,801 14	5,418 70	.....	20,666 58	.....
Mail depredations and special agents	51,779 20	38,803 20	38,086 69	10,049 18	138,718 27	116 00
Postage-stamps	47,944 29	32,948 29	23,858 36	8,988 65	113,739 59	3,550 00
Distribution of postage-stamps	2,333 25	1,635 35	1,951 95	508 21	6,428 76	.....
Stamped envelopes and newspaper-wrappers	176,093 97	111,607 22	112,159 75	29,892 29	429,753 23	1,528 60
Distribution of stamped envelopes and newspaper-wrappers	4,437 96	3,615 61	2,741 99	1,285 58	12,081 14	.....
Postal cards	77,728 52	58,786 65	61,487 71	28,461 06	226,463 94	.....
Distribution of postal cards	1,686 74	1,486 94	638 64	451 78	4,264 10	.....
Registered-package envelopes, locks and seals	6,347 96	6,456 36	8,733 04	14,340 68	35,878 04	.....
Official envelopes for postmasters	3,514 26	3,211 41	3,704 61	5,682 49	16,112 77	.....
Dead-letter envelopes	.....	59 60	447 00	6 70	513 30	.....
Ship, steamboat, and way letters	1,327 90	842 61	769 79	987 32	3,927 62	22 38
Fees to United States marshals, attorneys, clerks of courts, and counsel	537 72	1,294 03	488 90	686 97	3,007 62	348 60
Engraving, printing, and binding drafts and warrants	1 07	407 55	109 00	727 70	1,245 32	.....
Advertising	3,682 30	7,989 19	8,165 45	3,006 71	22,843 65	12 50
Miscellaneous, office Third Assistant Postmaster-General	7 75	.....	.....	.....	7 75	7 75
Miscellaneous, office of the Postmaster-General	.....	33 00	54 10	93 60	180 70	.....
Foreign mail transportation	49,966 94	61,559 43	60,966 04	48,186 34	220,678 75	7,143 99
Balance due foreign countries	.....	2,367 99	15,035 86	5,336 04	22,739 89	.....
Official Postal Guide	8,291 57	1,772 18	8,078 06	1,770 87	19,912 68	.....
Subsidy—San Francisco, Japan, and China line	125,000 00	125,000 00	.....	.....	250,000 00	.....
Total	8,165,231 10	9,050,472 68	8,083,916 34	8,186,702 32	33,486,322 44	1,163,818 20

OFFICE OF THE AUDITOR OF THE TREASURY FOR THE POST-OFFICE DEPARTMENT, *October* 30, 1877.

J. M. MCGREW, *Auditor.*

No. 3.—*Statement of the postal receipts and expenditures of*

States and Territories.	Letter-postage.	Waste paper and twine.	Box-rents and branch offices.	Postage-stamps, stamped envelopes, and postal cards.	Total receipts.
Maine	$2,206 58	$108 90	$24,000 13	$433,259 22	$459,574 83
New Hampshire	466 83	120 85	14,718 01	271,977 60	287,283 29
Vermont	348 43	100 01	11,108 94	240,680 94	252,238 32
Massachusetts	10,767 29	829 76	106,629 86	1,833,903 64	1,952,130 55
Rhode Island	897 68	104 06	20,588 74	192,451 20	214,041 68
Connecticut	2,490 90	231 80	38,702 15	546,752 22	588,177 07
New York	76,941 15	3,120 36	181,402 72	5,133,346 87	5,394,811 10
New Jersey	2,648 68	210 16	25,426 47	556,621 04	584,906 35
Pennsylvania	16,024 96	1,333 80	88,486 63	2,543,195 86	2,649,041 25
Delaware	223 23	14 62	1,268 16	65,616 32	67,122 33
Maryland	6,602 28	110 66	10,249 31	476,883 74	493,845 99
Virginia	2,123 63	57 11	11,816 20	394,194 48	408,191 42
West Virginia	657 68	16 69	3,343 79	131,910 85	135,929 01
North Carolina	525 59	41 89	7,548 10	187,235 81	195,351 39
South Carolina	577 52	35 33	6,997 13	155,825 15	163,435 13
Georgia	1,588 63	92 79	17,221 01	305,161 12	324,063 55
Florida	1,239 64	25 01	5,072 57	74,437 77	80,774 99
Ohio	5,405 17	1,128 10	78,344 01	1,707,146 83	1,792,024 11
Michigan	5,615 18	522 27	62,170 92	811,231 90	879,540 27
Indiana	2,141 32	456 32	43,986 73	692,016 23	738,600 60
Illinois	16,570 40	2,149 05	104,472 38	2,106,304 40	2,229,496 23
Wisconsin	2,981 27	305 28	45,639 06	615,183 82	664,109 43
Iowa	3,174 64	413 51	62,649 33	798,073 48	864,310 96
Missouri	5,711 04	673 55	30,953 97	939,764 08	977,102 64
Kentucky	1,790 35	198 21	16,263 99	405,211 34	423,393 89
Tennessee	1,021 77	104 44	10,172 26	292,493 97	303,792 44
Alabama	1,005 95	45 22	11,870 46	227,525 72	240,447 35
Mississippi	522 31	43 57	12,520 70	158,722 23	171,808 81
Arkansas	321 12	33 28	8,443 12	139,732 54	148,530 06
Louisiana	3,293 37	36 21	19,853 28	250,816 25	273,999 11
Texas	3,546 43	145 08	39,550 60	405,854 72	449,096 83
California	6,767 75	209 20	63,441 55	763,778 54	834,197 04
Oregon	230 79	51 57	9,785 84	88,176 47	98,244 67
Minnesota	3,665 24	181 11	24,222 34	340,747 73	368,816 42
Kansas	939 63	116 52	25,129 36	326,530 63	352,716 14
Nebraska	662 21	65 05	11,341 61	171,726 47	183,795 34
Nevada	402 93	11 03	14,005 50	70,422 00	84,841 46
Colorado	451 75	68 23	24,109 72	127,549 30	152,149 00
Utah	264 65	41 50	5,018 73	69,152 40	74,477 28
New Mexico	73 42	6 55	1,394 02	21,001 73	22,475 72
Washington	85 71	7 91	2,137 58	28,629 90	30,861 10
Dakota	160 58	14 69	2,389 93	41,461 67	44,026 87
Arizona	36 54	28 45	1,297 50	15,560 56	16,923 05
Idaho	37 86	18 30	2,044 28	17,833 54	19,933 98
Wyoming	84 15	6 04	2,833 07	35,780 67	38,703 93
Montana	66 81	24 17	5,433 17	26,603 59	32,127 74
Alaska	1 60	1 00	.....	376 35	378 95
District of Columbia	3,416 06	316 38	6,033 87	167,399 13	177,165 44
	196,708 70	13,975 59	1,322,088 80	25,406,232 02	26,939,005 11
Deduct miscellaneous items	.....	.....	120 72	.....	.....
Add miscellaneous items	44,649 56	.....	.....	351,283 74	395,812 58
	241,358 26	13,975 59	1,321,968 08	25,757,515 76	27,334,817 69

NOTE.—The following items of expenditure and revenue, being of a general nature, are not embraced

Amount paid for foreign mails and expenses of government agents	$470,678 75
Balances due foreign countries	22,739 89
Ship, steamboat, and way letters	3,927 62
Wrapping-paper	17,207 50
Twine	38,771 17
Office furniture	269 27
Advertising	10,927 39
Mail-bags and catchers	128,641 05
Salary and per diem of assistant superintendents of postal railway service	38,756 55
Mail locks and keys	15,387 50
Postmarking and canceling stamps	9,994 98
Mail depredations and special agents	138,718 27
Letter-balances	2,773 50
Expenses of postage-stamps, stamped envelopes, and postal cards	792,730 76
Dead letters, official and registered envelopes, locks and seals	52,504 11
Sundry and miscellaneous payments	54,020 13
Excess of transportation paid	509,307 09
Excess of expenditures brought down	3,844,149 22
	6,151,504 75

OFFICE OF THE AUDITOR OF THE TREASURY
FOR THE POST OFFICE DEPARTMENT, *October* 30, 1877.

the United States for the fiscal year ended June 30, 1877.

Compensation of postmasters.	Clerks for offices, rent, light, and fuel, and incidental expenses of post-offices.	Compensation of letter-carriers.	Compensation of route-agents, postal-railway clerks, mail-messengers, and supply of special offices.	Transportation by States.	Total expenses.	Excess of expenditures over receipts.	Excess of receipts over expenditures.
$176, 990 24	$43, 667 96	$10, 301 31	$47, 679 97	$246, 964 92	$525, 604 40	$66, 029 57	.....
123, 549 19	18, 372 33	3, 900 75	23, 583 72	114, 397 78	283, 803 77	.....	$3, 479 52
118, 950 24	14, 453 06	.....	25, 980 31	152, 164 69	311, 548 30	59, 309 98	.....
365, 408 69	310, 621 75	174, 781 10	179, 041 85	356, 822 30	1, 386, 675 69	.....	565, 454 86
40, 131 86	25, 718 16	16, 876 46	8, 122 37	44, 254 06	135, 102 91	.....	78, 938 77
173, 205 75	63, 961 13	19, 300 09	52, 833 34	178, 558 83	487, 859 14	.....	100, 317 93
756, 178 98	1, 054, 079 92	537, 995 83	424, 919 77	1, 627, 409 48	4, 400, 583 98	.....	994, 227 12
191, 508 05	44, 191 46	53, 165 53	32, 628 99	196, 119 15	517, 613 18	.....	67, 293 17
599, 196 80	329, 549 35	292, 521 19	205, 346 66	763, 510 75	2, 190, 174 75	.....	458, 866 50
22, 745 77	5, 079 94	7, 329 37	9, 561 93	27, 578 25	72, 295 26	5, 172 93	.....
92, 623 63	70, 593 03	53, 408 61	37, 254 22	303, 841 88	557, 721 37	63, 875 38	.....
157, 855 74	45, 575 99	19, 696 42	42, 503 09	392, 500 25	658, 131 49	249, 940 07	.....
60, 471 39	12, 543 15	4, 429 19	16, 089 38	116, 028 09	209, 561 20	73, 632 19	.....
93, 061 74	18, 432 18	.....	37, 802 16	205, 928 96	355, 225 04	159, 873 65	.....
62, 553 82	12, 609 12	5, 951 00	17, 896 13	120, 780 87	219, 790 94	56, 355 81	.....
121, 574 13	45, 919 34	9, 132 72	55, 176 94	249, 536 79	481, 339 92	157, 276 37	.....
37, 530 62	6, 890 14	.....	13, 343 79	113, 721 17	171, 485 72	90, 710 73	.....
469, 381 88	196, 073 30	122, 546 03	382, 264 61	1, 140, 308 61	2, 310, 574 43	518, 550 32	.....
318, 392 05	87, 997 99	33, 488 53	76, 816 95	419, 459 90	936, 085 42	56, 545 15	.....
282, 628 03	83, 249 20	37, 159 03	107, 698 49	446, 771 81	957, 506 66	218, 906 05	.....
564, 120 36	394, 217 89	153, 317 08	346, 482 33	953, 536 76	2, 411, 674 62	182, 178 39	.....
252, 816 86	60, 141 95	23, 683 87	85, 581 66	335, 825 78	758, 050 12	93, 940 69	.....
361, 845 46	62, 004 41	18, 769 60	117, 042 23	449, 290 68	1, 008, 952 38	144, 641 42	.....
238, 594 06	147, 265 30	167, 518 85	156, 790 49	670, 046 53	1, 320, 215 23	343, 112 59	.....
132, 611 08	40, 786 11	28, 418 34	59, 069 29	266, 422 59	527, 307 41	103, 913 52	.....
105, 884 27	40, 011 67	16, 957 30	74, 776 86	201, 245 21	438, 875 31	135, 082 87	.....
106, 707 35	24, 439 47	3, 943 33	33, 027 80	233, 666 73	401, 784 68	161, 337 33	.....
89, 228 79	12, 700 70	.....	14, 511 86	172, 585 51	289, 026 86	117, 218 05	.....
76, 311 57	13, 054 40	.....	15, 710 28	259, 013 98	364, 090 23	215, 560 17	.....
53, 782 60	57, 276 13	37, 248 51	18, 608 10	215, 891 54	382, 806 88	108, 807 77	.....
177, 147 99	56, 137 80	.....	36, 123 08	546, 916 02	816, 324 89	367, 228 06	.....
190, 941 62	112, 583 82	43, 283 71	70, 552 99	1, 209, 375 03	1, 626, 737 17	792, 540 13	.....
42, 415 15	9, 101 86	.....	10, 293 82	147, 105 16	208, 915 99	110, 671 32	.....
150, 449 90	36, 575 71	14, 695 83	56, 579 57	221, 292 00	479, 593 01	110, 776 59	.....
165, 998 20	34, 001 32	3, 610 30	63, 488 88	270, 750 54	537, 849 24	185, 133 10	.....
80, 021 18	17, 650 17	4, 703 28	62, 508 98	541, 981 21	706, 864 82	523, 069 48	.....
38, 267 36	12, 615 00	.....	2, 440 21	158, 626 05	211, 948 62	127, 107 16	.....
56, 636 11	21, 179 59	.....	15, 891 93	174, 674 57	268, 382 20	116, 233 20	.....
35, 195 80	9, 629 55	.....	8, 844 31	301, 510 08	355, 179 74	280, 702 46	.....
12, 242 99	1, 455 00	.....	28 05	202, 435 85	216, 161 89	193, 686 17	.....
17, 262 33	1, 276 14	.....	2, 584 42	118, 790 45	139, 913 34	109, 052 24	.....
23, 514 16	2, 159 25	.....	657 69	94, 591 14	120, 922 24	76, 895 37	.....
7, 987 56	473 75	.....	.....	109, 425 03	117, 886 34	100, 963 29	.....
11, 873 01	1, 062 50	.....	89 39	69, 202 32	102, 227 22	82, 293 24	.....
16, 294 53	3, 408 84	.....	180 00	59, 544 79	79, 428 16	40, 724 23	.....
18, 181 53	5, 001 00	.....	200 00	106, 275 78	129, 658 31	97, 530 57	.....
227 36	.....	.....	.....	.....	227 36	.....	151 59
6, 169 98	93, 922 08	32, 314 79	114, 668 47	.....	247, 075 32	69, 909 88	.....
7, 296, 597 96	3, 759, 710 00	1, 890, 497 95	3, 163, 277 36	15, 326, 679 87	31, 436, 763 14	6, 766, 487 49	2, 268, 729 46
1, 347 03	.....	.....	.....	264, 518 78	257, 796 23	257, 796 23	.....
.....	4, 239 14	3, 097 63	732 81	.....	.....	.....	395, 812 58
7, 295, 250 93	3, 763, 949 14	1, 893, 595 58	3, 164, 010 17	15, 062, 161 09	31, 174, 959 44	6, 508, 691 26	2, 664, 542 04

In the above statement, viz:

Receipts on account of dead letters	$4, 945 50
Receipts on account of fines and penalties	7, 541 62
Receipts on account of miscellaneous	11, 870 60
Receipts on account of money-order business	172, 409 85
Total excess of expenditures over receipts	5, 954, 737 18
	6, 151, 504 75

J. M. McGREW, *Auditor.*

No. 4.—*Comparative statement of receipts and expenditures of the Post-Office Department from July 1, 1836, to June 30, 1877.*

Year.	Receipts.			Expenditures.
	Revenue.	Treasury grants.	Total.	
1837	$4,945,668 21	.....	$4,945,668 21	$3,288,319 03
1838	4,238,733 46	.....	4,238,733 46	4,430,692 21
1839	4,484,656 70	.....	4,484,656 70	4,636,536 31
1840	4,543,521 92	.....	4,543,521 92	4,718,235 64
1841	4,407,726 27	$482,657 00	4,890,383 27	4,499,527 61
1842	4,546,849 65	.....	4,546,849 65	5,674,751 80
1843	4,296,225 43	.....	4,296,225 43	4,374,753 71
1844	4,237,287 83	.....	4,237,287 83	4,296,512 70
1845	4,289,841 80	.....	4,289,841 80	4,320,731 99
1846	3,487,199 35	750,000 00	4,237,199 35	4,076,036 91
1847	3,880,309 23	12,500 00	3,892,809 23	3,979,542 10
1848	4,555,211 10	125,000 00	4,680,211 10	4,396,850 27
1849	4,705,176 28	.....	4,705,176 28	4,479,049 13
1850	5,499,984 86	.....	5,499,984 86	5,212,953 43
1851	6,410,604 33	.....	6,410,604 33	6,278,401 68
1852	5,184,526 84	1,741,444 44	6,925,971 28	7,108,459 04
1853	5,940,724 70	2,225,000 00	7,495,724 70	7,982,756 59
1854	6,255,586 22	2,736,748 96	8,992,335 18	8,577,424 12
1855	6,642,136 13	3,114,542 26	9,756,678 39	9,968,342 29
1856	6,920,821 66	3,748,881 56	10,669,703 22	10,405,286 36
1857	7,353,951 76	4,528,004 67	11,881,956 43	11,508,057 93
1858	7,486,792 86	4,679,270 71	12,166,063 57	12,722,470 01
1859	7,968,484 07	3,915,946 49	11,884,430 56	11,458,083 63
1860	8,518,067 40	11,154,167 54	19,672,234 94	19,170,609 89
1861	8,349,296 40	4,639,806 53	12,989,102 93	13,606,759 11
1862	8,299,820 90	2,598,953 71	10,898,774 61	11,125,364 13
1863	11,163,789 59	1,007,848 72	12,171,638 31	11,314,206 84
1864	12,438,253 78	749,980 00	13,188,233 78	12,644,786 20
1865	14,556,158 70	3,968 46	14,560,127 16	13,694,728 28
1866	14,436,986 21	.....	14,386,986 21	15,352,079 30
1867	15,297,026 87	3,991,666 67	19,288,693 54	19,235,483 46
1868	16,292,600 80	5,696,525 00	21,989,125 80	22,730,592 65
1869	18,344,510 72	5,707,115 30	24,051,626 02	23,698,131 50
1870	19,772,220 65	4,022,140 85	23,794,361 50	23,998,837 63
1871	20,037,045 42	4,126,200 00	24,163,245 42	24,390,104 08
1872	21,915,426 37	4,933,750 00	26,909,176 37	26,658,192 31
1873	22,996,741 57	5,990,475 00	28,987,216 57	29,084,945 67
1874	26,471,071 82	5,922,433 55	32,393,505 37	32,126,414 58
1875	26,791,360 59	6,704,646 96	33,496,007 55	33,611,309 45
1876	28,634,197 50	5,088,583 03	33,722,780 53	33,263,487 56
1877	27,531,585 26	7,013,300 00	34,544,885 26	34,456,332 44

J. M. McGREW,
Auditor.

OFFICE OF THE AUDITOR OF THE TREASURY
FOR THE POST-OFFICE DEPARTMENT, *October* 30, 1877.

No. 5.—*Statement in detail of miscellaneous payments made by the Post-Office Department for the fiscal year ended June* 30, 1877, *and charged to "miscellaneous account, First Assistant Postmaster-General."*

AMOUNTS PAID BY THE DEPARTMENT ON WARRANTS.

Date.	To whom allowed.	For what object.	Amount.
1876.			
Aug. 7	W. L. Hunt	Special agent Post-Office Department, for telegrams, railway-fare, and printing, on account of railway mail-service for the month of July, 1876.	$56 50
7	R. C. Jackson	Special agent Post-Office Department, for sundry telegrams.	51 39
10	Thomas P. Cheney	Special agent Post-Office Department, for sundry telegrams, on account of railway mail-service for the month of July, 1876.	5 33
10	L. M. Terrell	Special agent Post-Office Department, for sundry telegrams, and expense of care and cleaning office, on account of railway mail-service for the month of July, 1876.	14 50

. 5.—*Statement of miscellaneous payments by the Post-Office Department, &c.*—Continued

Date.	To whom allowed.	For what object.	Amount.
1876.			
g. 10	James E. White	Special agent Post-Office Department, for sundry telegrams, on account of railway mail-service.	$7 44
11	I. A. Amerman	Superintendent railway mail-service, for rent of offices and sundry telegrams during the month of July, 1876.	66 14
30	C. Jay French	Special agent Post-Office Department, for telegrams, railway-guides, and railway-fare, during the month of July, 1876.	41 86
pt. 5	R. C. Jackson	Special agent Post-Office Department, for sundry telegrams during the month of August, 1876.	36 07
6	Thomas P. Cheney	Special agent Post Office Department, for sundry telegrams during the month of August, 1876.	4 91
6	W. L. Hunt	Special agent Post-Office Department, for sundry telegrams during the month of August, 1876, on account of railway mail-service.	39 28
9	L. M. Terrell	Special agent Post-Office Department, for sundry telegrams, care and cleaning of the office of the superintendent of railway mail-service, during the month of August, 1876.	12 50
11	I. A. Amerman	Superintendent of railway mail-service, for rent of office and sundry telegrams during the month of August, 1876.	61 78
11	James E. White	Special agent Post-Office Department, for sundry telegrams during the month of August, 1876, on account of railway mail-service.	8 90
16	C. Jay French	Special agent Post-Office Department, for sundry telegrams, office-cleaning, and railway-fare, during the month of August, 1876.	20 93
29	M. V. Bailey	Special agent Post-Office Department, for telegram and railway-fare during the month of September, 1876.	2 48
5	W. L. Hunt	Special agent Post-Office Department, for sundry telegrams and printing during the month of September, 1876.	23 30
5	R. C. Jackson	Special agent Post-Office Department, for sundry telegrams during the month of September, 1876.	38 73
5	L. M. Terrell	Special agent Post-Office Department, for sundry telegrams and care of office during the month of September, 1876.	28 06
11	I. A. Amerman	Superintendent of railway mail-service, for office-rent and telegrams during the month of September, 1876.	59 08
16	Thomas P. Cheney	Special agent Post-Office Department, for sundry telegrams during the month of September, 1876.	3 09
27	Theodore N. Vail	Superintendent of railway mail-service, for railway-fare, transportation expenses other than railway-fare, and telegrams, during the months of August, September, and October, 1876.	88 60
v. 10	C. Jay French	Special agent Post-Office Department, for mounting maps, and sundry telegrams, during the months of September and October, 1876.	94 53
14	R. C. Jackson	Special agent Post-Office Department, for telegrams, letter-drop-plates, and stationery, during the month of October, 1876, on account of railway mail-service.	47 39
14	James E. White	Special agent Post-Office Department, for sundry telegrams during the month of October, 1876.	23 61
14	L. M. Terrell	Special agent Post-Office Department, for sundry telegrams and care of office during the month of October, 1876.	43 95
18	W. L. Hunt	Special agent Post-Office Department, for sundry telegrams and printing during the month of October, 1876.	51 52
18	I. A. Amerman	Superintendent of railway mail-service, for office-rent and sundry telegrams during the month of October, 1876.	53 70
c. 5	W. L. Hunt	Special agent Post-Office Department and superintendent of railway mail-service, for telegrams, maps, and printing, during the month of November, 1876.	46 64
c. 7	James E. White	Special agent Post-Office Department, for sundry telegrams during the month of November, 1876.	7 09
7	R. C. Jackson	Special agent Post-Office Department, for sundry telegrams during the month of November, 1876.	64 14
13	I. A. Amerman	Superintendent of railway mail-service, for office-rent and telegrams during the month of November, 1876.	62 72
1877.			
n. 5	Thomas P. Cheney	Special agent Post-Office Department, for sundry telegrams and printing during the month of December, 1876.	21 80

No. 5.—*Statement of miscellaneous payments by the Post-Office Department, &c.*—Continued.

Date.		To whom allowed.	For what object.	Amount.
1877.				
Jan.	5	W. L. Hunt	Special agent and superintendent of railway mail-service, for sundry telegrams, mounting schemes, and printing, during the month of December, 1876.	$59 10
	7	Henry C. Jewell	Chief of Bureau of Engraving and Printing, for engraving and printing special agents' commissions.	115 00
	9	E. M. Whitaker	For stationery furnished for railway mail-service in month of September, 1876.	27 60
	11	C. Jay French	Special agent Post-Office Department, for shelving in office, gas, and telegrams, during the months of November and December, 1876.	64 09
	11	R. C. Jackson	Special agent Post-Office Department, for office furniture, fuel, and sundry telegrams, during the month of December, 1876.	91 19
	11	L. M. Terrell	Special agent Post-Office Department, for fuel, broom for office, and sundry telegrams during the month of December, 1876.	21 95
	11	James E. White	Special agent Post-Office Department, for sundry telegrams.	8 33
	13	I. A. Amerman	Superintendent of railway mail-service, for office-rent, stationery, and telegrams, during the month of December, 1876.	67 00
Feb.	5	W. L. Hunt	Special agent Post-Office Department for stationery, printing, and telegrams, on account of railway mail-service, during the month of January, 1877	23 80
	7	James E. White	Special agent Post-Office Department, for sundry telegrams during the month of January, 1877.	9 91
	8	C. Jay French	Special agent Post-Office Department, for stationery, printing gas, and sundry telegrams, during the month of January, 1877.	61 82
	8	R. C. Jackson	Special agent Post-Office Department, for stationery, moving furniture, and sundry telegrams, during the month of January, 1877.	162 04
	10	I. A. Amerman	Special agent Post-Office Department, for office-rent and sundry telegrams during the month of January, 1877.	56 58
	24	I. A. Amerman	Superintendent of railway mail service, for stationery.	86 14
	26	M. V. Bailey	Special agent Post-Office Department, for sundry telegrams, and key for office-safe, during the month of February, 1877.	2 98
	27	Theodore N. Vail	General superintendent of railway mail-service, for sundry telegrams during the months of January and February, 1877.	17 40
Mar.	2	John Jameson	Assistant superintendent of railway mail-service, for sundry telegrams during the month of February, 1877.	3 14
	6	James E. White	Special agent Post-Office Department, for sundry telegrams during the month of February, 1877.	6 35
	9	L. M. Terrell	Special agent Post-Office Department, for telegrams, care of office, and fuel, during the month of February 1877.	23 80
	9	W. L. Hunt	Superintendent of railway mail-service, for telegrams, mounting maps, and printing, during the month of February, 1877.	83 35
	12	R. C. Jackson	Special agent Post-Office Department, for sundry telegrams during the month of February, 1877.	62 32
	12	Theodore N. Vail	Special agent Post-Office Department, for electric pens.	347 50
	12	Hon. John Sherman	Secretary of the Treasury, to be deposited to the credit of the appropriation "Arming and equipping the militia," for carbine-ammunition expended by mail-carriers and teamsters in the service of the Quartermaster's Department at Fort Concho, Tex., in 1875, while carrying the United States mails between that post and Centralia Station, on the El Paso route.	6 00
	19	Thomas P. Cheney	Special agent Post-Office Department, for sundry telegrams.	8 79
	23	C. Jay French	Special agent Post-Office Department, for sundry telegrams, mounting maps, and printing, during the month of February, 1877.	89 21
April	4	Theodore N. Vail	General superintendent of railway mail-service, for stationery for the use of railway mail-service.	791 97
	4	Thomas P. Cheney	Special agent Post-Office Department, for electric pen and sundry telegrams during the month of March, 1877.	13 59

No. 5.—*Statement of miscellaneous payments by the Post-Office Department, &c.*—Continued.

Date.	To whom allowed.	For what object.	Amount.
1877.			
April 5	Theodore N. Vail	General superintendent of railway mail-service, for telegrams, drawings of mail-wagons, and transportation expenses other than railway-fare, during the months of February and March, 1877.	$290 00
6	James E. White	Special agent Post-Office Department, for telegrams and cutting facing-slips during the month of March, 1877.	59 14
9	R. C. Jackson	Special agent Post-Office Department, for sundry telegrams and stationery during the month of March, 1877.	64 40
12	E. M. Whitaker & Sons	For stationery (card-labels for pouch-slides) on account of railway mail-service.	197 25
13	H. J. McKusick	Assistant superintendent of railway mail-service, for sundry telegrams and office-rent.	123 27
13	W. L. Hunt	Superintendent of railway mail-service, for stationery, printing, and telegrams, during the month of March, 1877.	65 35
May 4	C. Jay French	Superintendent of railway mail-service, for sundry telegrams, mounting schemes, and gas, during the months of February, March, and April, 1877.	83 72
7	Thomas P. Cheney	Special agent Post-Office Department, for express charges and telegrams during the month of April, 1877.	26 73
7	R. C. Jackson	Special agent Post-Office Department, for telegrams, stationery, repair of railway post-office boxes, and mounting maps, during the month of April, 1877, on account of railway mail-service.	65 23
9	James E. White	Special agent Post-Office Department, for telegrams, freight on electric pen, and cutting facing-slips, on account of railway mail-service.	55 12
14	H. J. McKusick	Special agent Post-Office Department and superintendent of railway mail-service, for telegrams and office-rent during the month of April, 1877.	56 08
14	L. M. Terrell	Special agent Post-Office Department, for telegrams, office-boy, railway-fare, freight, and fuel, on account of railway mail-service.	26 60
17	W. L. Hunt	Special agent Post-Office Department and superintendent of railway mail-service, for telegrams, mounting schemes, and printing, during the month of April, 1877.	46 05
29	M. V. Bailey	Special agent Post-Office Department, for sundry telegrams during the month of May, 1877.	3 54
June 6	W. L. Hunt	Special agent Post-Office Department, for telegrams and printing during the month of May, 1877.	31 95
7	William B. Thompson	Special agent Post-Office Department, for telegrams, stationery, and fuel, during the month of May, 1877.	21 55
8	Thomas P. Cheney	Special agent Post-Office Department, for sundry telegrams during the month of May, 1877, on account of railway mail-service.	8 63
8	R. C. Jackson	Special agent Post-Office Department, for sundry telegrams during the month of May, 1877.	27 40
11	James E. White	Special agent Post-Office Department, for telegrams and printing during the month of May, 1877.	10 56
12	H. J. McKusick	Special agent Post-Office Department and superintendent of railway mail-service, for telegrams and office-rent during the month of May, 1877.	59 17
23	Amos P. Foster	Special agent Post-Office Department, for livery-hire, railway-fare, and incidental expenses, during the month of June, 1877.	76 60
27	C. J. French	Special agent Post-Office Department, for telegrams, printing, fuel, gas, and care of office, (fuel for month of April, 1877.)	89 26
July 11	Thomas P. Cheney	Special agent Post-Office Department, for sundry telegrams during the month of June, 1877.	4 84
11	C. J. French	Special agent Post-Office Department, for care of office, printing, and telegrams, during the month of June, 1877.	59 54
11	W. L. Hunt	Superintendent of railway mail-service, for printing, telegrams, and transportation, during the month of June, 1877.	57 65
11	James E. White	Special agent Post-Office Department, for telegrams and cutting label-slips during the month of June, 1877.	30 08
13	H. J. McKusick	Special agent Post-Office Department and superintendent of railway mail-service, for office-rent and telegrams during the month of June, 1877.	67 85

No. 5.—*Statement of miscellaneous payments by the Post-Office Department, &c.*—Continued.

AMOUNT PAID BY THE DEPARTMENT ON DRAFTS.

Date.	To whom allowed.	For what object.	Amount.
1876.			
Oct. 28	William B. Thompson	Special agent Post-Office Department, for telegrams, stationery, and printing, during the month of September, 1876.	$44 40
Nov. 14	William B. Thompson	Special agent Post-Office Department, for telegrams, stationery, gas, and chemicals, during the month of October, 1876.	28 44
Dec. 6	L. M. Terrell	Special agent Post-Office Department, for telegrams and care of office during the month of November, 1876.	22 55
6	William B. Thompson	Special agent Post-Office Department, for telegrams, stationery, printing, gas, chemicals, lamp-shade, and fuel, during the month of November, 1876.	27 24
20	Morgan Envelope Company	For stationery furnished to the Post-Office Department for the use of the postal-card agency from July 6, 1875, to June 30, 1876.	127 65
28	Theo. N. Vail	General superintendent of railway mail-service, for telegrams and expenses of transportation, other than railway-fare, during the months of October, November, and December, 1876.	83 59
1877.			
Jan. 11	William B. Thompson	Special agent Post-Office Department, for printing, plumbing, lamp-shade, chemicals, oil, gas, and fuel, during the month of December, 1876.	68 16
30	Theo. N. Vail	General superintendent of railway mail-service, for drawing-instruments.	17 50
Feb. 7	L. M. Terrell	Special agent Post-Office Department, for telegrams, care of office, stationery, printing, and fuel, during the month of January, 1877.	67 90
23	William B. Thompson	Special agent Post-Office Department, for telegrams, stationery, printing, oil, benzine, fuel, and hardware, during the month of January, 1877.	122 84
28	William B. Thompson	Special agent Post Office Department, for telegrams, stationery, hardware, oil, and fuel, during the month of February, 1877.	33 54
April 19	William B. Thompson	Special agent Post-Office Department, for telegrams, stationery, chemicals, oil, fuel, and brush, during the month of March, 1877.	54 69
May 2	William B. Thompson	Special agent Post-Office Department, for telegrams, stationery, type and furniture for printing-press, and fuel, during the month of April, 1877.	40 29
June 12	L. M. Terrell	Special agent Post-Office Department, for telegrams, electric pen, fuel, printing, and care of office, during the month of May, 1877.	72 25
23	Theo. N. Vail	Special agent Post-Office Department, for photographs, stationery, telegrams, and traveling expenses, during the months of April, May, and June, 1877.	178 00
23	L. M. Terrell	Special agent Post-Office Department, for telegrams, office-care, and stationery, (for six months,) during the month of March, 1877.	32 50
July 11	L M. Terrell	Special agent Post-Office Department, for telegrams, office-boy, and printing, during the month of June, 1877.	38 10
11	William B Thompson	Special agent Post-Office Department, for sundry telegrams during the month of June, 1877.	16 34
16	R. C. Jackson	Special agent Post-Office Department, for sundry telegrams, railway-fare, and stationery, during the month of June, 1877.	46 08
Aug. 7	William B. Thompson	Special agent Post-Office Department, for telegrams, railway-guide, and freight on mail-matter.	69 71
10	Theo. N. Vail	General superintendent of railway mail-service, for Poor's Manual of Railroads in the United States, 10 copies of Railway Age, photographs of mail-wagons, and outline maps.	458 50

AMOUNTS CREDITED POSTMASTERS ON THEIR GENERAL ACCOUNTS, FIRST ASST. P. M. GEN'L, MISCELLANEOUS.

1876.			
Nov. 2	T. L. James	Postmaster at New York City, for amount expended during the third quarter of 1876 in fitting up and furnishing rooms for use of railway postal clerks.	$1,652 35
Dec. 2	James Coey	Postmaster at San Francisco, Cal., for water-rent in the third quarter of 1876.	6 75

Amounts credited postmasters on their general accounts, &c.—Continued.

Date.	To whom allowed.	For what object.	Amount.
1876. Dec. 30	T. L. James	Postmaster at New York City, for amount paid for rent of house for use of clerks of railway mail-service from July 1 to October 31, 1876.	$200 00
1877. Mar. 31	T. L. James	Postmaster at New York City, for amount paid for city directory.	5 00
Apr. 9	J. M. Comly	Postmaster Columbus, Ohio, for Columbus directory, sent to the Dead-Letter Office, P. O. D.	3 00
12	H. A. Greene	Postmaster Jersey City, N. J., for copy of city directory, per order of the Postmaster-General.	3 00
13	A. B. Clark	Postmaster at Newark, Ohio, for amount paid for moving post-office, July 15, 1876.	4 00
14	J. Jorgenson	Late postmaster at Petersburg, Va., for stationery and cleaning office in the 4th quarter of 1876.	5 60
May 14	S. J. Burpee	Postmaster at Marshall, Mich., for miscellaneous payments in the 4th quarter of 1876.	6 00
15	Benjamin Conley	Postmaster at Atlanta, Ga., for rent of room during the 4th quarter of 1876.	50 00
June 19	T. R. McFerson	Postmaster at Evansville, Ind., for repairs in 1st quarter of 1877.	40 00
July 7	H. C. Payne	Postmaster at Milwaukee, Wis., for one copy of city directory.	4 00
24	H. A. Cady	Late postmaster at Lockport, N. Y., for miscellaneous expenses in the 4th quarter of 1876.	18 54
Aug. 8	H. B. Nichols	Postmaster at Norfolk, Va., for contingent expenses (arrival and departure of mails) not allowed in the 2d quarter of 1877.	15 00
9	T. S. Case	Postmaster at Kansas City, Mo., for amount expended in the 2d quarter of 1877, on account of railway mail-service.	70 70
10	W. N. Denny	Postmaster at Vincennes, Ind., for amount expended in the 2d quarter of 1877, on account of railway mail-service.	62 50
13	D. Goddard	Postmaster at Orange, Mass., for five hours' labor, picking up, cleaning, and counting postal cards scattered along the railroad-track by reason of box being caught by the car-wheels.	1 00
15	A. B. Wade	Late postmaster at South Bend, Ind., for miscellaneous expenses in the 4th quarter of 1876.	9 80
Sept. 17	M. Pritchard	Postmaster at Alden, Iowa, for repairs of stamp, disallowed in 1st quarter of 1877.	80
17	W. P. Hornback	Postmaster at Saint Ignace, Mich., for telegrams, 2d quarter of 1877.	3 06
17	L. Whitney	Postmaster at Muskegon, Mich., for omission of arrival and departure of mails in the 2d quarter of 1877.	6 00

RECAPITULATION.

Amounts allowed to the postmasters at the principal offices of the United States, credited on quarterly accounts-current, for incidental expenses of such offices actually and necessarily incurred, such as office-repairs, gas-fixtures, telegraphing, and other miscellaneous expenses, and charged to miscellaneous account, First Assistant Postmaster-General.

Third quarter, 1876		$10,926 05
Fourth quarter, 1876		13,634 30
First quarter, 1877		13,240 64
Second quarter, 1877		17,636 07
Total		55,447 06
Amount allowed to postmasters and others and credited on general accounts		2,167 10
Amount paid by warrants		5,205 77
Amount paid by drafts		1,649 27
Total		64,469 20
Deduct amounts charged to postmasters for overcredits	$5 55	
Deduct amount of fares charged to inland transportation	17 11	
		22 66
Amount actually paid and charged to miscellaneous account		64,446 54

Statement in detail of miscellaneous payments made by the Post-Office Department for the fiscal year ended June 30, 1877, and charged to "Miscellaneous account, Third Assistant Postmaster-General."

AMOUNT PAID BY THE DEPARTMENT ON WARRANTS.

Date.	To whom allowed.	For what object.	Amount.
1876. Dec. 20	George F. Nesbitt & Co.....	For stationery furnished to the Post-Office Dement for the use of the postage-stamp agency, from November 18, 1875, to June 30, 1876, inclusive.	$7 75

Statement in detail of miscellaneous payments made by the Post-Office Department for the fiscal year ended June 30, 1877, and charged to "Miscellaneous account, Postmaster-General."

AMOUNT PAID BY THE DEPARTMENT ON WARRANTS.

Date.	To whom allowed.	For what object.	Amount.
1877. Jan. 11	James N. Tyner.....	Postmaster-General, for expenses incurred during two trips to New York on official business.	$54 10
Feb. 7	James H. Marr.....	For expenses to and from New York on official business.	33 00

AMOUNT PAID BY THE DEPARTMENT ON DRAFTS.

1877. Aug. 7	The American.....	For subscription to daily to July 10, 1878.....	10 60
11	Louisville Courier-Journal..	For one year's subscription to the daily and Sunday edition.	14 00
11	Montgomery Advertiser....	For one year's subscription to the daily edition....	10 00
17	Pioneer Press Company.....	For one year's subscription to the Daily Pioneer Press.	12 00
17	D. R. Anthony.....	Editor and proprietor of the Times, Leavenworth, Kansas, for one year's subscription to the daily edition.	6 00
17	A. H. Belo & Co.....	Proprietors of the Galveston News, for subscription to the daily edition for one year from August 6, 1877.	12 00
17	Mobile Register.....	For one year's subscription to the daily edition....	12 00
17	R. L. C. White & Co.....	Proprietors of the Herald Printery, for one year's subscription.	2 00
17	Hawkeye Publishing Co....	For one year's subscription to the Daily Hawkeye, from August 4, 1877.	10 00
30	A. G. Horn & Sons.....	For one year's subscription to the Meridian Mercury, Meridian, Miss.	5 00
	Total miscellaneous, Postmaster-General.....		180 70

J. M. McGREW, *Auditor.*

OFFICE OF THE AUDITOR OF THE TREASURY
FOR THE POST-OFFICE DEPARTMENT, *October* 30, 1877.

No. 6.—*Statement showing the transactions of the Money-Order Office of the United States during the fiscal year ended June 30, 1877.*

States and Territories.	Domestic.							International.					
								Canadian.			British.		
	Balance from last year.	Number of orders issued.	Amount of orders issued.	Fees.	Premium.	Drafts and deposits received from postmasters.	Transferred from postage fund.	Number of orders issued.	Amount of orders issued.	Fees.	Number of orders issued.	Amount of orders issued.	Fees.
Alabama	$16,867 75	69,186	$1,143,003 29	$9,280 60	.....	$700,735 00	$1,010 00	17	$506 25	$10 80	105	$2,480 38	$70 75
Arizona Territory	16,819 00	8,434	296,326 20	1,659 15	.....	.....	.....	12	540 00	11 00	45	1,222 12	33 25
Arkansas	23,679 48	51,245	1,180,201 01	8,002 75	$89 94	614,036 48	224 75	6	101 77	2 20	65	1,541 10	43 50
California	22,991 74	90,894	1,892,570 70	13,607 90	.....	1,465,462 00	6,035 06	638	16,737 78	371 40	2,571	45,562 29	1,415 00
Colorado	9,783 27	36,762	656,229 70	5,048 35	.....	348,495 00	1,950 90	42	1,149 70	25,00	1,926	43,473 01	1,204 50
Connecticut	6,906 60	75,567	1,024,124 55	9,291 25	.....	325,174 00	15,230 46	287	5,965 52	136 40	1,775	24,597 84	816 50
Dakota Territory	3,755 88	11,546	226,212 68	1,659 05	.....	6,000 00	293 60	8	194 10	4 80	22	401 53	12 25
Delaware	1,981 96	10,546	150,552 50	1,327 65	.....	11,555 00	6,554 00	32	1,039 25	22 60	103	2,066 63	62 50
District of Columbia	10,216 89	28,614	516,148 69	3,894 55	.....	1,031,051 65	.....	105	2,147 59	51 60	429	6,650 03	212 75
Florida	21,618 52	37,718	827,238 64	5,717 20	.....	145,080 00	4,370 06	106	4,121 62	85 80	172	5,374 03	143 50
Georgia	46,272 57	81,361	1,243,143 23	10,531 90	4 30	1,089,029 35	2,781 22	121	3,243 52	70 40	194	4,415 72	126 25
Idaho Territory	3,313 15	6,571	206,960 67	1,216 10	.....	55,918 00	.....	5	153 00	3 80	104	3,292 01	88 50
Illinois	71,916 26	498,256	6,567,766 58	61,474 90	.....	5,990,084 00	43,936 16	617	10,539 43	251 00	3,218	47,980 52	1,546 25
Indiana	30,703 83	228,951	2,915,466 84	27,751 55	126 28	1,088,384 33	16,256 81	47	698 05	17 00	683	10,125 19	317 50
Indian Territory	20 44	855	27,344 26	160 45	.....	.....	.....	.....	.....	.....	.....	.....	.....
Iowa	56,172 10	324,964	4,151,697 97	39,645 55	3 92	1,712,941 35	14,084 21	76	1,565 99	36 20	521	7,320 22	234 75
Kansas	28,379 71	153,834	2,352,137 88	20,041 20	51 05	751,034 00	7,655 80	50	760 80	18 80	292	5,397 04	155 75
Kentucky	10,313 09	75,194	1,259,032 35	10,938 85	85	915,277 00	6,738 00	41	845 55	20 00	304	5,054 71	156 50
Louisiana	46,088 34	54,418	1,245,379 95	8,387 85	.....	1,722,400 00	55 00	62	1,758 25	38 80	376	7,768 85	220 25
Maine	13,921 91	74,232	1,272,010 61	9,963, 60	33	650,632 00	10,238 00	212	3,801 16	92 20	660	12,288 89	361 75
Maryland	9,775 00	57,418	876,275 99	7,391 70	12 57	996,246 00	6,502 61	113	2,461 61	57 00	586	8,194 64	266 00
Massachusetts	18,543 79	171,372	2,649,546 56	22,103 30	49 42	1,740,612 25	53,787 43	2,363	49,745 54	1,150 40	5,369	67,645 01	2,544 75
Michigan	44,641 00	243,521	3,345,720 01	30,159 15	3 92	1,558,748 00	9,027 14	996	19,616 59	453 00	2,407	39,154 26	1,200 75
Minnesota	27,207 98	110,589	1,551,903 01	14,082 15	.....	752,131 00	1,213 07	139	2,672 32	62 80	233	4,119 60	122 25
Mississippi	27,703 30	88,613	1,488,887 96	12,017 25	15 05	18,650 00	320 14	8	185 00	4 00	64	1,225 05	36 00
Missouri	35,942 90	201,303	2,933,873 93	25,628 50	.....	4,642,511 17	9,759 68	126	2,311 50	54 20	870	14,798 87	443 75
Montana Territory	8,026 88	9,686	180,679 61	1,367 95	.....	111,929 00	50 00	25	825 25	17 60	64	1,884 00	50 25
Nebraska	22,501 34	62,169	1,076,876 20	8,785 00	.....	919,405 00	8,818 94	5	87 50	2 00	186	3,430 53	101 75
Nevada	7,094 61	15,003	360,054 50	2,373 80	.....	.....	.....	85	2,153 98	48 20	260	4,364 86	133 25
New Hampshire	7,137 01	46,540	645,135 32	5,801 30	.....	92,525 00	4,566 32	162	2,998 40	70 80	498	8,133 30	253 00
New Jersey	8,416 75	60,615	883,187 05	7,684 55	.....	232,691 00	28,229 75	173	3,381 08	80 60	2,488	34,160 18	1,153 75

No. 6.—*Statement showing the transactions of the Money-Order Office of the United States during the fiscal year ended June 30, 1877*—Continued.

States and Territories.	Domestic.							International.					
								Canadian.			British.		
	Balance from last year.	Number of orders issued.	Amount of orders issued.	Fees.	Premium.	Drafts and deposits received from postmasters.	Transferred from postage fund.	Number of orders issued.	Amount of orders issued.	Fees.	Number of orders issued.	Amount of orders issued.	Fees.
New Mexico Terrritory	$6,230 77	6,555	$156,112 76	$1,037 50	.....	$114,372 52	$7 50	1	$10 00	$0 20	2	$75 00	$2 00
New York	188,036 65	379,170	5,473,925 90	47,910 50	.....	15,226,442 38	102,433 99	2,040	42,108 34	967 80	13,406	187,984 35	6,312 50
North Carolina	22,784 67	74,077	1,349,406 68	10,368 30	.....	245,926 00	2,691 55	40	1,138 54	25 00	60	1,365 60	39 00
Ohio	42,546 62	366,972	4,500,639 34	43,651 05	.....	2,852,843 29	70,896 39	445	6,917 86	166 60	2,460	37,103 10	1,184 75
Oregon	14,625 13	20,469	392,262 68	3,066 55	.....	368,517 00	719 29	48	1,310 08	28 60	169	3,508 00	101 25
Pennsylvania	42,494 52	265,425	3,617,759 73	32,961 95	.....	2,651,332 22	53,593 08	686	14,130 48	325 40	5,218	73,110 24	2,383 75
Rhode Island	1,450 32	25,318	322,859 39	3,240 80	.....	78,143 00	1,550 00	247	5,225 41	119 00	1,371	20,388 75	671 75
South Carolina	12,516 06	49,213	777,544 80	6,479 75	.....	426,124 00	2,234 77	14	329 53	7 20	40	1,109 51	30 25
Tennessee	29,624 05	100,423	1,762,554 09	13,778 50	.....	1,545,940 77	3,396 31	30	575 51	13 20	218	4,109 86	123 50
Texas	73,969 56	241,791	3,000,726 98	21,266 70	$301 12	1,808,217 35	11,592 49	65	1,729 69	36 80	356	7,340 50	208 75
Utah Territory	10,2 0 49	11,147	268,105 96	1,770 15	.....	162,381 00	110 00	12	366 75	7 60	485	7,557 02	231 50
Vermont	8,563 34	48,442	649,397 51	5,988 95	.....	106,495 00	6,759 00	108	1,658 42	41 00	234	3,773 94	118 75
Virginia	22,095 60	74,686	1,137,442,94	9,708 10	.....	1,167,490 00	6,223 13	37	1,045 18	22 20	273	9,207 76	273 50
Washington Territory	3,508 67	9,707	251,992 06	1,623 05	.....	5,438 00	41 04	76	3,002 91	63 80	90	1,889 15	53 50
West Virginia	6,497 85	26,298	368,923 82	3,317 05	.....	46,450 00	2,663 87	5	100 45	2 20	107	1,840 70	55 25
Wisconsin	45,554 61	229,510	3,369,214 89	29,044 90	1 96	1,914,956 00	11,625 28	223	5,006 17	111 20	666	9,990 14	314 00
Wyoming Territory	3,124 94	10,751	215,951 03	1,540 10	.....	.....	50 00	12	252 80	5 40	47	862 60	25 25
Total	1,192,536 80	4,925,931	72,820,509 70	623,748 95	660 71	58,409,806 11	536,276 80	10,768	227,216 22	5,233 60	51,791	805,338 63	25,656 75

No. 6.—*Statement showing the transactions of the Money Order Office of the United States during the fiscal year ended June 30, 1877*—Continued.

States and Territories.	International—Continued.						Balance due postmasters.	Domestic.				
	German.			Swiss.								
	Number of orders issued.	Amount of orders issued.	Fees.	Number of orders issued.	Amount of orders issued.	Fees.		Number of orders paid.	Amount of orders paid.	Amount of orders repaid.	Transferred to postage-fund.	Deposits.
Alabama	269	$7,187 18	$191 80	1	$10 00	$0 25	.....	30,771	$573,165 45	$6,518 43	$355 00	$1,279,793 40
Arizona Territory	13	395 00	10 50	.....	.....	.....	$14 14	2,056	79,202 42	1,570 62	.....	219,663 00
Arkansas	86	1,583 70	44 45	.....	.....	.....	.....	19,321	506,225 61	6,200 61	107,584 03	1,182,447 37
California	2,175	51,454 62	1,393 40	102	2,451 80	68 50	286 63	45,229	1,390,161 34	14,384 68	.....	2,027,852 00
Colorado	115	2,703 30	71 15	4	77 00	2 50	.....	21,504	479,747 95	6,254 31	13 40	561,096 00
Connecticut	558	9,310 93	259 60	23	326 25	10 25	25 99	64,340	992,628 14	5,570 25	.....	389,098 00
Dakota Territory	24	448 00	12 50	.....	.....	.....	15 84	3,708	84,005 44	1,762 65	.....	145,450 60
Delaware	30	702 22	19 35	4	65 00	1 75	.....	7,542	131,569 92	814 96	.....	38,921 00
District of Columbia	370	7,969 23	216 00	89	1,169 01	36 75	.....	35,366	585,419 24	2,571 83	.....	963,558 00
Florida	89	2,864 00	74 50	1	40 00	1 00	.....	12,759	350,263 32	5,317 99	3,275 00	627,582 35
Georgia	331	9,633 19	253 70	19	508 00	13 50	58 42	62,252	1,048,306 69	7,622 04	1 38	1,292,103 75
Idaho Territory	59	2,105 50	53 75	.....	.....	.....	66 43	662	22,684 07	882 51	182,104 00	62,364 00
Illinois	3,994	68,087 15	1,891 20	452	8,762 81	250 75	420 05	654,178	8,358,915 07	41,178 28	2,191 00	4,212,064 27
Indiana	772	10,912 03	311 35	51	1,000 85	28 50	293 51	139,164	2,119,269 70	17,264 08	7,117 29	1,886,410 13
Indian Territory	.....	.....	.....	.....	.....	.....	.....	90	2,053 98	224 77	.....	24,896 00
Iowa	601	9,931 44	278 30	34	569 10	17 00	362 15	196,246	3,186,767 45	26,513 01	1,413 95	2,662,430 00
Kansas	103	2,290 90	61 25	2	62 00	1 75	71 54	89,085	1,744,305 33	16,996 21	1,213 81	1,347,175 91
Kentucky	441	8,672 93	238 95	38	981 30	26 75	144 43	84,294	1,493,091 71	9,379 01	150 00	683,170 94
Louisiana	356	8,197 60	221 25	36	878 00	24 75	.....	54,026	1,250,662 13	5,899 20	.....	1,709,197 00
Maine	74	1,744 50	44 85	14	570 00	14 25	425 88	55,919	1,167,360 48	5,646 54	3,000 00	754,818 00
Maryland	1,140	22,599 15	611 70	12	205 65	6 25	4 87	87,226	1,587,332 18	4,386 42	90 03	306,345 25
Massachusetts	1,082	20,936 51	577 30	101	1,836 00	52 50	274 80	297,950	3,718,071 13	16,395 06	1,464 00	755,288 04
Michigan	1,213	20,341 46	563 90	105	1,234 70	41 75	311 80	153,168	2,693,691 85	21,470 15	915 03	2,225,296 00
Minnesota	397	5,217 95	150 20	23	708 00	19 00	39 68	68,128	1,142,610 13	9,328 41	160 00	1,144,435 00
Mississippi	21	384 50	10 60	7	119 50	3 50	100 43	24,441	433,181 80	9,126 43	.....	1,073,169 20
Missouri	1,128	18,660 00	516 05	117	3,410 25	92 50	272 62	273,759	4,756,789 74	19,162 46	25 00	2,793,772 08
Montana Territory	45	1,503 00	39 00	.....	.....	.....	.....	2,227	57,201 36	1,093 20	.....	237,040 00
Nebraska	202	3,833 70	103 15	4	126 00	3 50	1 29	36,591	728,640 34	7,261 80	71 69	1,266,214 00
Nevada	123	3,626 10	95 90	21	284 25	8 50	.....	1,949	64,216 17	2,007 32	.....	306,241 00
New Hampshire	84	1,127 25	32 35	1	10 00	25	39 14	32,579	526,060 04	3,552 11	100 00	223,464 21
New Jersey	1,304	21,717 45	605 20	31	530 50	16 00	185 33	57,676	938,782 75	5,592 24	788 00	207,888 47

No. 6.—*Statement showing the transactions of the Money-Order Office of the United States during the fiscal year ended June* 30, 1877—Continued.

States and Territories.	International—Continued.						Balance due postmasters.	Domestic.				
	German.			Swiss.								
	Number of orders issued.	Amount of orders issued.	Fees.	Number of orders issued.	Amount of orders issued.	Fees.		Number of orders paid.	Amount of orders paid.	Amount of orders repaid.	Transferred to postage fund.	Deposits.
New Mexico Territory	19	$618 50	$16 90	.....	.....	.....	$19 21	1,321	$38,052 42	$975 23	.....	$234,155 54
New York	12,999	249,280 05	6,892 65	1,925	$41,636 59	$1,211 50	359 91	905,292	10,773,273 08	43,557 17	$149,018 31	10,026,869 08
North Carolina	195	6,676 13	174 25	3	46 50	1 25	2 55	30,444	570,439 69	6,189 97	4,043 00	1,031,757 00
Ohio	2,297	39,147 97	1,088 35	110	1,979 01	57 50	661 36	408,197	5,400,270 91	29,301 40	62,857 95	1,945,483 00
Oregon	278	6,765 65	184 80	17	550 45	14 75	25 07	8,048	233,259 97	3,069 13	.....	517,431 00
Pennsylvania	2,288	42,079 74	1,158 35	161	3,862 90	106 75	440 28	340,705	4,489,178 73	25,231 85	6,292 61	1,808,888 64
Rhode Island	150	2,745 58	74 60	4	27 00	1 25	21 50	16,601	281,650 14	2,089 67	.....	199,521 00
South Carolina	105	2,143 43	56 60	.....	.....	.....	.....	24,137	401,449 63	3,727 95	81 26	803,090 00
Tennessee	161	3,864 50	103 60	85	1,652 61	47 50	122 70	83,592	1,562,837 80	10,448 08	170 00	1,758,100 00
Texas	790	18,329 95	489 85	21	446 95	13 50	87 90	70,805	1,799,361 49	17,517 66	699 05	3,029,953 36
Utah Territory	34	748 50	21 00	32	958 45	25 50	.....	6,565	174,091 13	2,195 05	.....	262,769 00
Vermont	18	484 19	13 10	.....	.....	.....	115 99	31,611	517,288 60	3,366 35	693 00	246,092 00
Virginia	226	6,638 59	179 75	26	987 00	25 25	5 61	59,930	1,024,876 77	6,270 33	1,641 13	1,300,710 85
Washington Territory	74	1,871 25	51 90	.....	.....	.....	.....	2,628	86,880 44	1,471 86	.....	174,796 00
West Virginia	88	1,454 75	41 05	2	13 00	50	11	12,774	220,118 61	2,558 76	67 47	199,344 00
Wisconsin	1,468	22,674 53	630 35	124	1,528 90	49 00	92 89	149,703	2,597,046 87	19,204 19	289 00	2,673,040 00
Wyoming Territory	6	210 00	5 50	.....	.....	.....	.....	3,114	65,697 32	1,196 49	.....	150,168 00
Total	38,455	731,873 80	20,135 80	3,802	79,625 33	2,296 25	5,370 05	4,769,673	72,448,156 53	460,318 72	537,885 39	58,971,413 44

No. 6.—*Statement showing the transactions of the Money-Order Office of the United States during the fiscal year ended June 30, 1877*—Continued.

States and Territories.	International.												Total.			
	Canadian.			British.			German.			Swiss.						
	Number of orders paid.	Amount of orders paid.	Amount of orders repaid.	Number of orders paid.	Amount of orders paid.	Amount of orders repaid.	Number of orders paid.	Amount of orders paid.	Amount of orders repaid.	Number of orders paid.	Amount of orders paid.	Amount of orders repaid.	Expenses.	Commissions and clerk-hire.	Balance due the United States.	Miscellaneous items.
Alabama	3	$86 16	$40 00	35	$815 11	.....	50	$1,117 83	$50 00	3	$83 94	.....	$308 49	$4,703 11	$14,129 05	$188 08
Arizona Territory	.....	.....	.....	.....	.....	.....	8	207 46	.....	.....	.....	.....	.....	756 67	15,630 19	.....
Arkansas	19	642 55	.....	39	914 01	.....	29	790 21	.....	18	466 63	.....	552 64	3,927 59	19,762 87	37 01
California	688	20,191 23	.....	669	13,256 65	$273 80	799	19,221 48	232 55	27	607 53	.....	1,001 58	12,335 84	20,858 77	31 37
Colorado	107	2,951 42	.....	173	3,486 64	16 50	92	2,239 11	.....	2	63 21	.....	479 35	3,027 47	10,816 02	22 00
Connecticut	302	5,514 50	16 50	460	7,890 02	61 00	311	7,670 20	40 00	31	668 05	$10 00	5 65	6,191 62	6,760 25	51 96
Dakota Territory	13	390 58	.....	2	19 37	9 30	42	913 10	36 00	.....	.....	.....	24 75	769 28	5,619 81	9 35
Delaware	71	1,204 96	.....	46	988 51	.....	19	444 31	.....	1	41 26	.....	2 00	787 67	1,171 20	4 62
District of Columbia	74	1,073 49	.....	141	2,123 85	46 18	127	2,924 37	15 40	11	206 03	.....	6,645 16	4,894 72	10,286 47	.....
Florida	48	1,313 94	25 00	39	802 32	40 75	23	976 78	.....	5	143 91	.....	267 21	2,820 13	23,841 60	58 57
Georgia	19	367 14	.....	90	1,680 45	.....	97	2,334 15	.....	.....	.....	.....	1,724 80	6,830 85	49,107 62	6 40
Idaho Territory	11	419 88	.....	2	51 55	.....	2	58 50	.....	1	1 03	.....	3,218 40	477 24	909 73	.....
Illinois	794	14,949 71	86 15	1,651	31,453 30	191 55	3,381	81,796 28	210 70	105	2,887 93	4 48	3,035 53	49,646 93	75,603 62	692 26
Indiana	112	2,067 11	.....	291	5,522 22	45 00	798	19,737 01	240 00	48	1,101 19	.....	1,649 96	15,298 33	25,221 08	1,450 52
Indian Territory	.....	.....	.....	.....	.....	.....	.....	.....	.....	.....	.....	.....	.....	58 61	292 49	.....
Iowa	134	3,037 25	18 05	414	8,419 61	42 50	1,365	35,471 04	32 75	108	2,862 93	.....	39 70	21,682 25	45,851 29	278 47
Kansas	78	2,161 73	6 00	296	6,020 23	.....	356	8,972 51	10 00	31	853 19	.....	589 11	11,178 15	28,585 88	51 41
Kentucky	44	786 24	.....	123	2,051 16	19 45	382	9,372 59	17 00	11	270 60	.....	662 42	8,051 67	11,315 14	103 33
Louisiana	29	652 44	.....	130	2,282 35	26 00	321	7,700 20	15 00	8	232 50	.....	313 00	5,946 24	58,492 83	.....
Maine	803	16,879 89	5 65	198	4,262 54	68 59	42	1,171 61	.....	.....	.....	.....	47 85	7,015 43	15,668 42	164 93
Maryland	62	976 41	.....	264	4,095 88	9 30	533	11,649 46	71 50	7	139 05	.....	11 60	7,237 11	8,241 73	25 42
Massachusetts	3,025	60,827 72	139 50	2,138	35,284 50	290 49	354	8,195 01	37 20	25	518 66	.....	214 75	21,555 35	20,948 87	175 28
Michigan	986	22,593 41	76 50	707	13,798 49	88 55	1,272	30,758 29	122 00	52	1,487 97	3 90	96 03	19,220 21	41,405 40	193 65
Minnesota	208	5,704 85	.....	183	3,598 81	.....	954	24,701 10	156 32	20	618 74	.....	12 85	8,996 58	20,013 56	212 66
Mississippi	4	126 36	.....	37	716 17	.....	42	1,120 56	.....	14	370 87	.....	1,750 79	5,115 91	24,961 65	22 54
Missouri	123	3,000 51	45 00	416	8,439 91	2 50	1,497	37,106 32	53 00	119	2,805 46	5 00	678 43	21,549 17	44,618 22	203 12
Montana Territory	17	624 49	.....	1	5 13	.....	4	118 66	200 00	.....	.....	.....	9 75	618 56	9,461 39	.....
Nebraska	57	1,588 62	.....	159	3,149 09	.....	413	10,670 08	5 00	23	583 77	.....	4 15	4,901 33	20,957 25	28 78
Nevada	43	1,485 94	.....	22	494 47	.....	11	228 36	.....	.....	.....	.....	6 25	876 72	4,681 72	.....
New Hampshire	123	2,843 80	.....	94	1,909 62	39 90	18	439 45	28 00	.....	.....	.....	17 87	3,285 49	5,992 00	96 95
New Jersey	348	4,435 78	132 00	1,421	22,891 95	78 26	1,305	29,716 56	22 85	30	563 69	5 00	5 35	5,068 10	5,900 15	168 04

No. 6.—*Statement showing the transactions of the Money-Order Office of the United States during the fiscal year ended June 30, 1877*—Continued.

States and Territories.	International.												Total.			
	Canadian.			British.			German.			Swiss.						
	Number of orders paid.	Amount of orders paid.	Amount of orders repaid.	Number of orders paid.	Amount of orders paid.	Amount of orders repaid.	Number of orders paid.	Amount of orders paid.	Amount of orders repaid.	Number of orders paid.	Amount of orders paid.	Amount of orders repaid.	Expenses.	Commissions and clerk-hire.	Balance due the United States.	Miscellaneous items.
New Mexico Territory	.....	.....	.....	.....	.....	.....	1	$14 86	.....	.....	.....	.....	.....	$442 88	$4,861 93	.....
New York	5,298	$74,200 41	$390 84	6,618	$101,463 77	$414 02	7,453	102,362 68	$394 49	395	$7,921 69	$360 93	$57,140 65	86,998 69	90,589 08	$568 22
North Carolina	17	357 68	.....	45	996 53	.....	23	485 19	20 00	5	118 24	.....	2,918 32	4,909 11	18,333 45	77 84
Ohio	794	12,293 07	10 00	1,146	19,791 04	55 20	2,120	49,076 95	163 25	98	2,396 61	.....	1,642 48	32,303 86	42,780 04	457 43
Oregon	86	2,272 42	.....	26	490 74	68 96	32	795 44	40 00	16	408 62	.....	34 43	1,908 64	31,885 22	14 73
Pennsylvania	1,068	15,471 89	112 40	3,190	53,684 28	468 79	2,716	61,907 06	95 65	252	5,738 29	193 9.	2,974 25	25,483 79	39,304 98	712 20
Rhode Island	100	2,167 16	12 00	313	5,087 51	25 00	83	1,806 62	110 60	1	20 83	.....	.....	2,111 35	1,890 78	25 69
South Carolina	7	186 59	.....	36	587 02	.....	51	1,257 41	.....	1	18 46	.....	9 35	3,441 96	14,726 27	.....
Tennessee	16	343 83	.....	78	1,487 06	5 00	111	2,576 72	.....	32	810 72	.....	657 12	9,314 10	19,116 09	40 18
Texas	23	602 02	.....	191	4,013 87	3 00	570	14,641 28	90 00	81	2,171 72	.....	1,168 20	11,539 93	62,927 75	68 76
Utah Territory	12	340 12	.....	164	3,070 82	.....	44	1,162 44	11 00	2	19 41	9 89	202 85	1,059 85	7,550 89	1 47
Vermont	160	3,467 48	47 25	64	1,113 33	.....	9	287 16	.....	1	43 14	.....	.....	3,316 01	7,591 28	103 59
Virginia	27	524 25	.....	259	5,092 78	112 00	77	1,831 46	8 00	25	666 47	.....	335 23	6,381 91	12,893 43	.....
Washington Territory	41	707 59	.....	2	13 91	18 00	3	61 75	.....	.....	.....	.....	15 00	776 96	4,793 72	.....
West Virginia	13	296 33	.....	38	842 22	6 00	64	1,332 19	.....	8	115 02	.....	462 00	1,618 16	4,484 91	114 93
Wisconsin	207	5,427 05	5 00	423	8,353 59	63 15	1,884	46,383 78	73 83	98	2,397 59	.....	115 71	17,145 52	40,970 33	279 21
Wyoming Territory	17	282 00	.....	10	233 81	.....	1	30 78	.....	.....	.....	.....	.....	682 19	3,737 03	.....
Total	16,231	297,838 00	1,167 84	22,844	392,766 19	2,588 74	29,889	703,836 36	2,602 09	1,715	40,424 95	593 18	91,050 41	473,359 24	1,055,543 45	6,740 97

J. M. McGREW, *Auditor.*

OFFICE OF THE AUDITOR OF THE TREASURY
FOR THE POST-OFFICE DEPARTMENT,
Washington, D. C., September 14, 1877.

No. 7.—*Statement of the receipts and disbursements of the Money-Order Office of the United States for the fiscal year ended June* 30, 1877.

RECEIPTS.

Balance in the hands of postmasters June 30, 1876			$1,192,536 80
Amount received for domestic money-orders issued	$72,820,509 70		
" " " Canadian international money-orders issued	227,216 22		
" " " British international money-orders issued	805,338 63		
" " " German international money-orders issued	731,873 80		
" " " Swiss international money-orders issued	79,625 33		
Total issued			74,664,563 68
Amount received for fees on domestic money-orders issued	623,748 95		
" " " " Canadian international money-orders issued	5,233 60		
" " " " British international money-orders issued	25,656 75		
" " " " German international money-orders issued	20,135 80		
" " " " Swiss international money-orders issued	2,296 25		
Total fees			677,071 35
Amount received for premiums, &c			660 71
" " deposits and drafts			58,409,806 11
" transferred from postage fund			536,276 80
" due postmasters			5,370 05
Total			135,486,285 50

DISBURSEMENTS.

Amount of domestic money-orders paid		72,448,156 53	
" Canadian international money-orders paid		297,838 00	
" British " " "		392,766 19	
" German " " "		703,836 36	
" Swiss " " "		40,424 95	
Total paid		73,883,022 03	
Amount of domestic money-orders repaid	460,318 72		
" Canadian international money-orders repaid	1,167 84		
" British international money-orders repaid	2,588 74		
" German international money-orders repaid	2,602 09		
" Swiss international money-orders repaid	593 18		
Total repaid		467,270 57	
Amount transferred to postage fund		537,885 39	
" deposited at first-class offices		58,971,413 44	
" paid for incidental expenses		91,050 41	
" " commissions and clerk-hire		473,359 24	
Miscellaneous items		6,740 97	
Balance in the hands of postmasters June 30, 1877		1,055,543 45	
			135,486,285 50

J. M. McGREW, *Auditor.*

OFFICE OF THE AUDITOR OF THE TREASURY
FOR THE POST-OFFICE DEPARTMENT,
Washington, D. C., September 14, 1877.

No. 8.—*Statement showing the revenue which accrued on domestic money-order transactions for the fiscal year ended June* 30, 1877.

Amount received for fees on orders issued		$623,748 95
Amount received for premiums, &c		660 71
		624,409 66
Amount paid for commissions and clerk-hire	$434,576 32	
Amount paid for incidental expenses	22,963 70	
Lost remittances	4,523 00	
Bad debts	62,415 45	
Net revenue	99,931 19	
		624,409 66

J. M. McGREW, *Auditor.*

OFFICE OF THE AUDITOR OF THE TREASURY
FOR THE POST-OFFICE DEPARTMENT,
Washington, D. C., September 14, 1877.

No. 9.—*Statement showing the revenue which accrued on money-order transactions with the Dominion of Canada for the fiscal year ended June* 30, 1876.

Amount received for fees on orders issued		$4,284 85
Amount of excess of commissions received		277 71
		4,562 56
Amount paid for commissions and clerk-hire	$3,118 29	
Amount paid for incidental expenses	1,249 75	
Net revenue	194 52	
		4,562 56

J. M. McGREW, *Auditor.*

OFFICE OF THE AUDITOR OF THE TREASURY
FOR THE POST-OFFICE DEPARTMENT,
Washington D. C., September 14, 1877.

No. 10.—*Statement showing the revenue which accrued on money-order transactions with the United Kingdom of Great Britain and Ireland for the fiscal year ended June* 30, 1876.

Amount received for fees on orders issued		$31,256 10
Amount paid for commissions and clerk-hire	$21,964 28	
Excess of commissions paid the United Kingdom	6,068 45	
Cost of exchange	2,591 08	
Amount paid for incidental expenses	89 85	
Net revenue	542 44	
		31,256 10

J. M. McGREW, *Auditor.*

OFFICE OF THE AUDITOR OF THE TREASURY
FOR THE POST-OFFICE DEPARTMENT,
Washington, D. C., September 14, 1877.

No. 11.—*Statement showing the revenue which accrued on money-order transactions with the German Empire for the fiscal year ended June* 30, 1876.

Amount received for fees on orders issued		$21,448 10
Amount paid for commissions and clerk-hire	10,269 27	
Excess of commissions paid the German Empire	2,257 82	
Cost of exchange	231 13	
Amount paid for incidental expenses	101 58	
Net revenue	8,588 30	
		21,448 10

J. M. McGREW, *Auditor.*

OFFICE OF THE AUDITOR OF THE TREASURY
FOR THE POST-OFFICE DEPARTMENT,
Washington, D. C., September 14, 1877.

No. 12.—*Statement showing the revenue which accrued on money-order transactions with Switzerland for the fiscal year ended June* 30, 1876.

Amount received for fees on orders issued		$2,347 25
Net loss		108 44
		2,455 69
Amount paid for commissions and clerk-hire	$726 69	
Excess of commissions paid Switzerland	456 78	
Cost of exchange	206 77	
Amount paid for incidental expenses	1,065 45	
		2,455 69

J. M. McGREW,
Auditor.

OFFICE OF THE AUDITOR OF THE TREASURY
FOR THE POST-OFFICE DEPARTMENT,
Washington, D. C., September 14, 1877.

No. 13.—*Recapitulation.*

Revenue accrued on domestic transactions, 1877	$99,931 19
Revenue accrued on Canadian international transaction, 1876	194 52
Revenue accrued on British international transactions, 1876	542 44
Revenue accrued on German international transactions, 1876	8,588 30
	109,256 45
From which deduct—	
Loss on Swiss international transactions, 1877	108 44
	109,148 01

J. M. McGREW,
Auditor.

OFFICE OF THE AUDITOR OF THE TREASURY
FOR THE POST-OFFICE DEPARTMENT,
Washington, D. C., September 14, 1877.

No. 14.—*Weight of letters and newspapers, &c., sent from the United States to the United Kingdom in British mails during the fiscal year ended June* 30, 1877.

Lines.	Letters.	Newspapers, &c.
	Grams.	*Grams.*
Cunard line	14,055,623	62,200,377
White Star line	6,053,745	27,003,362
Hamburg-American Packet Company	6,707,063	32,807,150
Liverpool and Great Western Steam Company	8,360,092	37,156,411
North-German Lloyd of Bremen	2,039,814	11,554,100
Canadian line	1,832,751	9,077,065
Anchor line	838,935	6,954,725
American Steamship Company	433,981	3,844,907
Inman line	5,485,808	24,411,869
Total	45,806,812	215,009,966
Increase compared with last fiscal year	1,548,055	11,995,561

J. M. McGREW, *Auditor.*

OFFICE OF THE AUDITOR OF THE TREASURY
FOR THE POST OFFICE DEPARTMENT, *October* 30, 1877.

No. 15.—*Weight of letters and newspapers, &c., sent from the United States to Germany in closed mails through England and France, and by direct steamer, during the fiscal year ended June* 30, 1877.

Lines.	Letters.	Newspapers, &c.
	Grams.	*Grams.*
North-German Lloyd of Bremen direct	7, 720, 824	32, 818, 043
Hamburg-American Packet Company, direct	6, 586, 019	28, 466, 005
Liverpool and Great Western Steam Company, via England	4, 016, 527	13, 211, 290
North-German Lloyd, of Bremen, via England	1, 369, 545	3, 580, 662
Hamburg-American Packet Company, via England	1, 013, 515	1, 131, 459
Cunard line, via England	4, 691, 731	14, 325, 109
White Star line, via England	759, 050	1, 454, 003
Inman line, via England	286, 295	171, 251
Total	26, 443, 506	95, 157, 822
Compared with last fiscal year { Increase	.....	11, 235, 552
Compared with last fiscal year { Decrease	640, 521	.....

J. M. McGREW, *Auditor.*

OFFICE OF THE AUDITOR OF THE TREASURY
FOR THE POST OFFICE DEPARTMENT, *October* 30, 1877.

No. 16.—*Weight of letters and newspapers, &c., sent from the United States to Denmark during the fiscal year ended June* 30, 1877.

Lines.	Letters.	Newspapers, &c.
	Grams.	*Grams.*
Hamburg-American Packet Company	716, 400	1, 912, 890
North German Lloyd of Bremen	411, 710	815, 908
Anchor line	6, 290	22, 940
White Star line	16, 475	23, 139
Total	1, 150, 875	2, 774, 877
Compared with last fiscal year { Increase	.....	520, 566
Compared with last fiscal year { Decrease	59, 869	.....

J. M. McGREW, *Auditor.*

OFFICE OF THE AUDITOR OF THE TREASURY
FOR THE POST OFFICE DEPARTMENT, *October* 30, 1877.

No. 17.—*Weight of letters and newspapers, &c., sent from the United States to Italy during the fiscal year ended June* 30, 1877.

Lines.	Letters.	Newspapers, &c.
	Grams.	*Grams.*
North German Lloyd of Bremen	202, 158	834, 262
Cunard line	586, 239	2, 418, 718
Hamburg-American Packet Company	420, 938	1, 920, 842
Liverpool and Great Western Steam Company	444, 697	1, 744, 606
Inman line	324, 029	1, 522, 952
White Star line	365, 431	1, 735, 156
Total	2, 343, 492	10, 176, 566
Increase compared with last fiscal year	347, 182	4, 151, 173

J. M. McGREW, *Auditor.*

OFFICE OF THE AUDITOR OF THE TREASURY
FOR THE POST OFFICE DEPARTMENT, *October* 30, 1877.

No. 18.—*Weight of letters and newspapers, &c., sent from the United States to Sweden during the fiscal year ended June* 30, 1877.

Lines.	Letters.	Newspapers, &c.
	Grams.	*Grams.*
Hamburg-American Packet Company	1, 490, 933	2, 860, 260
North German Lloyd of Bremen	885, 186	1, 706, 430
Anchor line	11, 000	27, 675
White Star line	24, 720	37, 354
Total	2, 411, 839	4, 631, 719
Increase compared with last fiscal year	74, 695	1, 111, 812

J. M. McGREW, *Auditor.*

OFFICE OF THE AUDITOR OF THE TREASURY
FOR THE POST-OFFICE DEPARTMENT, *October* 30, 1877.

No. 19.—*Weight of letters and newspapers, &c., sent from the United States to France during the fiscal year ended June* 30, 1877.

Lines.	Letters.	Newspapers, &c.
	Grams.	*Grams.*
Cunard line	1, 535, 625	5, 960, 055
Hamburg-American Packet Company	1, 330, 759	4, 713, 807
French line	1, 263, 233	6, 117, 053
Liverpool and Great Western Steam Company	1, 128, 447	4, 909, 122
White Star line	722, 077	2, 702, 813
Inman line	496, 784	1, 839, 578
North-German Lloyd of Bremen	439, 929	1, 835, 931
Anglo-French line	4, 840	37, 175
Total	6, 921, 694	28, 115, 534
Increase compared with last fiscal year	483, 585	3, 498, 512

J. M. McGREW, *Auditor.*

OFFICE OF THE AUDITOR OF THE TREASURY
FOR THE POST-OFFICE DEPARTMENT, *October* 30, 1877.

No. 20.—*Weight of letters and newspapers, &c., sent from the United States to Belgium during the fiscal year ended June* 30, 1877.

Lines.	Letters.	Newspapers, &c.
	Grams.	*Grams.*
Cunard line	216, 301	656, 340
Hamburg-American Packet Company	179, 338	496, 901
Liverpool and Great Western Steam Company	125, 814	483, 765
White Star line	130, 726	488, 119
Inman line	112, 974	409, 257
North-German Lloyd of Bremen	74, 133	251, 206
Red Star line	750	226
Total	840, 036	2, 785, 814
Increase compared with last fiscal year	16, 322	244, 436

J. M. McGREW, *Auditor.*

OFFICE OF THE AUDITOR OF THE TREASURY
FOR THE POST-OFFICE DEPARTMENT, *October* 30, 1877.

No. 21.—*Weight of letters and newspapers, &c., sent from the United States to Spain during the fiscal year ended June* 30, 1877.

Lines.	Letters.	Newspapers, &c.
	Grams.	*Grams.*
North-German Lloyd of Bremen	48, 614	226, 154
Cunard line	148, 946	605, 375
Hamburg-American Packet Company	99, 905	596, 912
Liverpool and Great Western Steam Company	111, 553	417, 518
White Star line	94, 077	558, 369
Inman line	86, 880	494, 367
Total	589, 975	2, 898, 695
Increase compared with last fiscal year	332, 795	1, 659, 118

J. M. McGREW, *Auditor.*

OFFICE OF THE AUDITOR OF THE TREASURY
FOR THE POST-OFFICE DEPARTMENT, *October* 30, 1877.

No. 22.—*Weight of letters and newspapers, &c., sent from the United States to Switzerland, in closed mails, via England and Belgium, and by direct steamer, via Bremen and Hamburg, during the fiscal year ended June* 30, 1877.

Lines.	Letters.	Newspapers, &c.
	Grams.	*Grams.*
Cunard line	435, 003	1, 763, 143
Hamburg-American Packet Company	361, 755	1, 751, 520
Liverpool and Great Western Steam Company	337, 026	1, 560, 786
White Star line	273, 995	1, 360, 807
Inman line	235, 897	1, 226, 707
North German Lloyd of Bremen	169, 173	763, 532
Total	1, 812, 849	8, 446, 495
Increase compared with last fiscal year	60, 263	1, 020, 033

J. M. McGREW, *Auditor.*

OFFICE OF THE AUDITOR OF THE TREASURY
FOR THE POST-OFFICE DEPARTMENT, *October* 30, 1877.

No. 23.—*Weight of letters and newspapers, &c., sent from the United States to the Nether lands, during the fiscal year ended June* 30, 1877.

Lines.	Letters.	Newspapers, &c.
	Grams.	*Grams.*
Cunard line	290, 721	596, 185
Hamburg-American Packet Company	236, 359	904, 879
Liverpool and Great Western Steam Company	188. 853	398, 980
White Star line	186, 121	531, 390
Inman line	161, 672	563, 888
North German Lloyd of Bremen	114, 219	354, 533
Netherlands-American Steam Navigation Company	3, 395	.....
Total	1, 181, 340	3, 349, 855
Compared with last fiscal year { Increase	.....	104, 323
Compared with last fiscal year { Decrease	81, 986	.....

J. M. McGREW, *Auditor.*

OFFICE OF THE AUDITOR OF THE TREASURY
FOR THE POST-OFFICE DEPARTMENT, *October* 30, 1877.

No. 24.—*Weight of letters and newspapers, &c., sent from the United States to Norway, during the fiscal year ended June* 30, 1877.

Lines.	Letters.	Newspapers, &c.
	Grams.	*Grams.*
Hamburg-American Packet Company	1, 166, 485	2, 830, 465
White Star line	.....	8, 090
North German Lloyd of Bremen	732, 327	1, 074, 466
Total	1, 898, 812	3, 913, 021
Increase compared with last fiscal year	32, 812	1, 022, 491

J. M. McGREW, *Auditor.*

OFFICE OF THE AUDITOR OF THE TREASURY
FOR THE POST-OFFICE DEPARTMENT, *October* 30, 1877.

No. 25.—*Weight of letters and newspapers, &c., sent from the United States to European countries, during the fiscal year ended June* 30, 1877.

Countries.	Letters.	Newspapers, &c.
	Grams.	*Grams.*
United Kingdom of Great Britain and Ireland	45, 806, 812	215, 009, 966
Germany	26, 443, 506	95, 157, 822
France	6, 921, 694	28, 115, 534
Belgium	840, 036	2, 785, 814
Netherlands	1, 181, 340	3, 349, 855
Switzerland	1, 812, 849	8, 446, 495
Italy	2, 343, 492	10, 176, 566
Denmark	1, 150, 875	2, 774, 877
Sweden	2, 411, 839	4, 631, 719
Norway	1, 898, 812	3, 913, 021
Spain	589, 975	2, 898, 695
Total	91, 401, 230	377, 260, 364
Increase compared with last fiscal year	2, 112, 333	36, 564, 477

J. M. McGREW, *Auditor.*

OFFICE OF THE AUDITOR OF THE TREASURY
FOR THE POST-OFFICE DEPARTMENT, *October* 30, 1877.

No. 26.—*Number of letters exchanged between the United States and foreign countries other than transatlantic mails, during the fiscal year ended June* 30, 1877.

Countries.	Number of letters.	
	Received.	Sent.
West Indies, &c	435, 755	400, 005
China and Japan	157, 725	76, 189
Panama	105, 045	40, 467
Honolulu, Auckland, &c	66, 274	87, 001
Mexico	31, 777	32, 940
Brazil	21, 598	8, 585
Ecuador	750	3, 151
Venezuela	61	3, 953
New Granada	1, 492	7, 468
Guatemala and San Salvador	6, 783	9, 880
Bermuda	14, 863	19, 481
Total	842, 126	689, 120
Decrease compared with last fiscal year	207, 885	182, 220

J. M. McGREW, *Auditor.*

OFFICE OF THE AUDITOR OF THE TREASURY
FOR THE POST-OFFICE DEPARTMENT, *October* 30, 1877.

INDEX

TO

APPENDIX TO POSTMASTER-GENERAL'S REPORT.

Page.

Advertising, rates allowed for, insufficient 14
Appointment office, estimates for 187
operations of 7
of postmasters by President 6
Postmaster-General 6
Appropriations, estimates for 184
Auditor of Treasury for Post-Office Department, report of 255
Binding drafts and warrants, estimates for 194
Bissell, A. H., letter of, on classification of mail-matter 242
Brazil admitted to postal union 223
British colonies admitted to postal union 220
Canada, money-order convention with 224
Compensation to railroads 150
proposed law fixing 151
Contractors, amount of fines and deductions on 13
sub, should be protected 14
Contracts, increase and decrease in cost of by States 64
speculative biddings for 13
temporary 13
Danish West Indies admitted to postal union 223
Dead letters, disposition of 211
division of 161
originating in foreign countries 214
registered, classification and disposition of 216
returned from foreign countries 214
valuable, classification and disposition of 215
Dead mail-matter, classification and disposition of 211
Depository post-offices 255
Discrepancy between statements of Auditor and Second Assistant Postmaster-General explained 13
Estimates for appropriations, comparison of, with present appropriation 194
for appointment office 187
engraving, printing, and binding drafts and warrants 194
foreign mails 195
inland transportation 189
office of Postmaster-General 185
postage-stamps and agency 191
postal cards and agency 193
post-office and dead-letter envelopes 193
Post-Office Department 184
registered-package envelopes, locks, and seals 193
ship-letters 194
special agents and mail depredations 185
stamped envelopes, and wrappers, and agency 192
topographer's office 186
unadjusted indebtedness 195
remarks on 155
Expenditures 261
and receipts, comparative statement of 196, 264
Fast mails 149
Files, records, and mails, division of 164
Finance, division of 156
Fire, how to be avoided in postal cars 11, 154
Foreign mails, estimates for 195
weight of 220

Page.
Foreign money-order convention with Dominion of Canada 224
Italy 225
Newfoundland 225
Free-delivery system, operations of 2
Greenland admitted to postal union 223
Hong-Kong admitted to postal union 220
Hubbard, Gardiner G., reports deficiency of appropriation for special commission on railway mail service 240
Increase of stamps, &c., issued 210
Indebtedness, estimate of unadjusted 195
Italy, money-order convention with 225
Japan admitted to postal union 222
Local agents 141
Mail-bags, catchers, locks, &c 11
contracts for 12
in operation June 30, 1877 16
statement of purchases of 135
Mail-matter, classification of 242
Mail-messenger service, reduction in cost of 10
Mail-route messengers 140
Mail-transportation, cost of 258
Money-order business 271
Netherland colonies admitted to postal union 221
Newfoundland, money-order convention with 225
Persia admitted to postal union 223
Portuguese colonies admitted to postal union 223
Postal cards, number issued 203
Postal cars, experiments to avoid fire in 11, 154
Postage-stamps, abuses in sale of 164
amount issued 203
denomination of 209
division of 158
Postal union, admission of Brazil 223
British colonies of Bermuda Islands, British Guiana, Ceylon, Hong-Kong, island of Mauritius, Jamaica, Labuan, Straits Settlements, and Trinidad 220
Danish West Indies 223
Greenland 223
Japan 222
Netherland colonies 221
Persia 223
Spanish colonies 221
Post-offices, increase and decrease of 6
Railway companies, compensation to 150
proposed law regulating 151
double pay claimed by, over one track 9
should only be required to deliver mail at stations 9
Railway mail service, accommodations for mails and agents, (Table E) 66
casualties to employés of 152
civil-service reform in 148
compensation for 11
cost of, by States 19
cost per mile per annum, (Table E) 66
employés of, change in classification of 142
duties and salaries of 141
increased labors of 146
number, &c., of 143
to be uniformed 11, 154
growth of 10
history of, 1836–1877 134
increase of 143
increase and decrease in cost of 64
operating 30th June, 1877, in Alabama 40
Arkansas 43
California 56
Colorado 58
Connecticut 26
Dakota 57
Delaware 36

Page.
Railway mail-service, operating 30th June, 1877, in Florida 40
Georgia 39
Illinois 49
Indiana 47
Iowa 53
Kansas 55
Kentucky 45
Louisiana 42
Maine 21
Maryland 37
Massachusetts 23
Michigan 51
Minnesota 55
Mississippi 41
Missouri 43
Nebraska 55
Nevada 56
New Hampshire 21
New Jersey 31
New York 27
North Carolina 38
Ohio 45
Oregon 57
Pennsylvania 33
Rhode Island 26
South Carolina 39
Tennessee 44
Texas 42
Utah 57
Vermont 22
Virginia 37
Washington Territory 57
West Virginia 37
Wisconsin 52
readjustment of pay for, (Table F) 98
report of superintendent of 139
special commission on 240
speed of mails, (Table E) 66
trips per week, (Table E) 66
weight of mails, (Table E) 66
Railway post-office clerks 139
lines 136
comparative statement of 138
local agents 141
mails distributed in 147
mail-route messengers 140
route-agents 140
service, annual miles of 144
increase of 146
Receipts and disbursements at depository post-offices ..... 20[illegible]
Treasury depositories 198
Receipts and expenditures, comparative statement of 196
Registered letters at New York and Chicago 219
carried for Post Office and Treasury Department 219
division of 161
number transmitted, by States 217
Route-agents 140
Second Assistant Postmaster General, report of 8
Ship letters, estimate of postage on 194
Spanish colonies admitted to postal union 221
Speed of mails, (table E) 66
Stamped envelopes and wrappers, official 209
ordinary 203
Star service, increase and decrease in cost of 64
protection to subcontractors for 14
Steamboat service, miles of, per annum, comparative statement with increase and decrease per cent 144
Steamboat service operating 30th June, 1877, in Arkansas 62
California 63

Page.
Steamboat service operating 30th June, 1877, in Florida 61
Georgia 61
Kentucky 63
Louisiana 62
Maine 59
Maryland 60
Massachusetts 59
Michigan 63
Mississippi 61
Missouri 62
New Hampshire 59
New Jersey 60
New York 59
North Carolina 61
Ohio 63
Oregon 63
Pennsylvania 60
Rhode Island 59
South Carolina 61
Tennessee 63
Texas 62
Virginia 60
Washington Territory 63
West Virginia 60
Superintendent railway mail service, report of 139
Table E 66
index to 94
Table F 98
index to 130
Third Assistant Postmaster-General, bureaus in office of 156
report of 155
Topographer's office, need of increased appropriations for 15
Transportation, auditor's credits for 258
estimates for explained 13
increase and decrease of cost for, by States 64
inland 8, 17
rapid 151
Unmailable letters, classification and disposition of 213
Weight of mails, (Table E.) 66
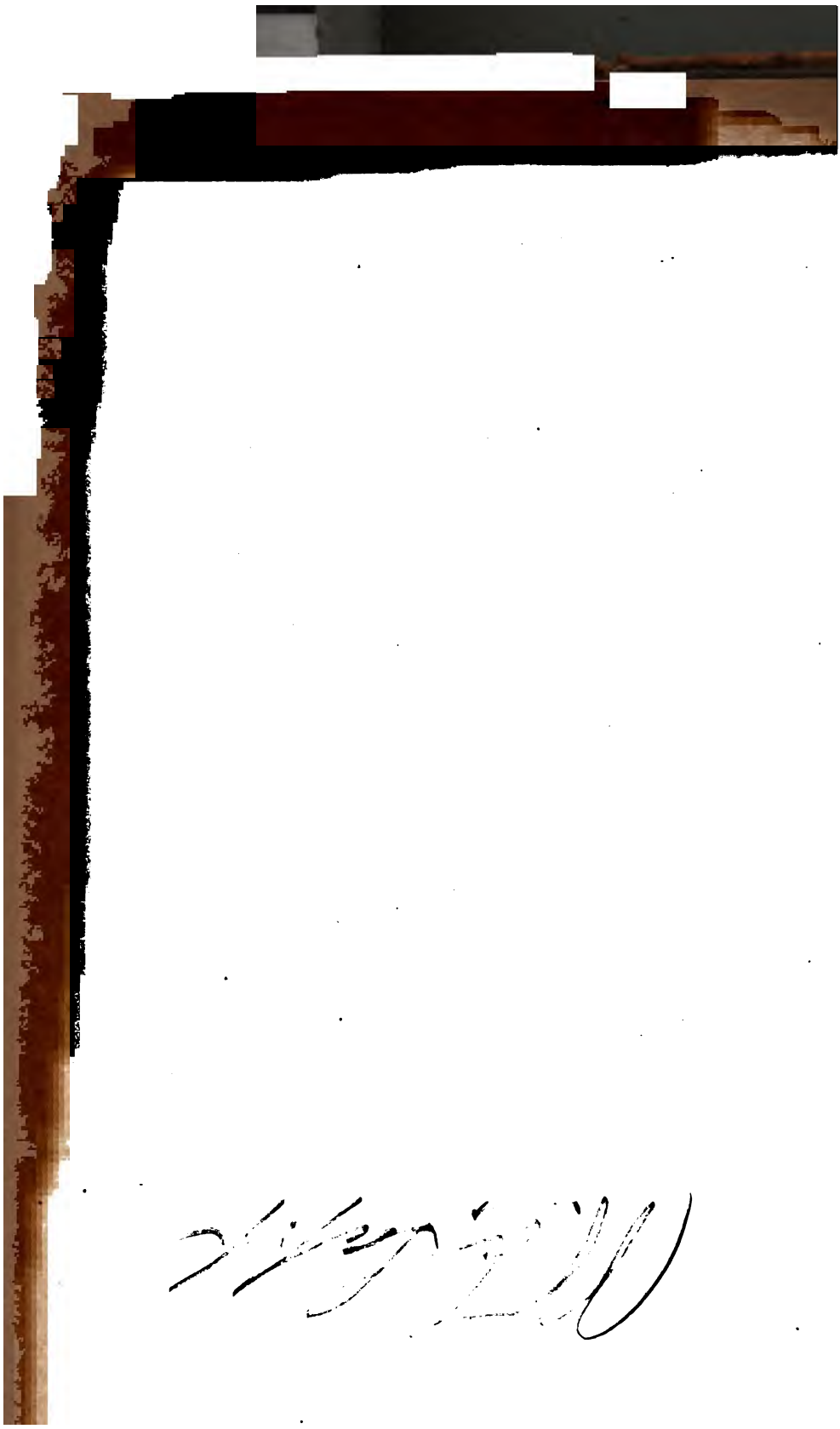
O